INDEX TO SHEETS
SEE SHEET 1a

CITY OF BATON ROUGE
AND
PARISH OF EAST BATON ROUGE
DEPARTMENT OF TRANSPORTATION & DRAINAGE
ENGINEERING DIVISION

PLANS OF PROPOSED

MALL OF LOUISIANA BOULEVARD
(FORMERLY PAULAT BOULEVARD)
(FORMERLY PICARDY-PERKINS CONNECTOR)
(PACKAGE 2: MALL OF LA BLVD. BRIDGES OVER DAWSON CREEK (NB & SB))
C.P. PROJECT NO. 12-CS-HC-0043

PROJECT AREA



VICINITY MAP

END PACKAGE 2
MALL OF LA BLVD.
STA. 123+37.00

BEGIN PACKAGE 2
MALL OF LA BLVD.
STA. 115+45.00

BEGIN PERKINS ROAD
CONSTRUCTION
STA. 513+33.16

BEGIN PICARDY AVE.
STA. 344+54.50

END MALL OF LA BLVD.
STA. 143+22.00

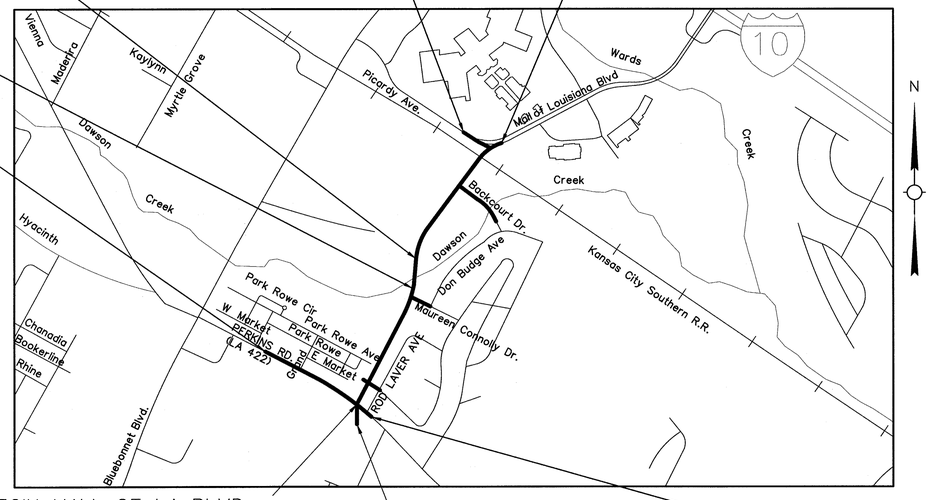

BEGIN MALL OF LA BLVD.
STA. 100+15.12

BEGIN APPLETREE DRIVE
STA. 47+60.11

END PERKINS ROAD
CONSTRUCTION
STA. 526+33.10

MALL OF LOUISIANA BOULEVARD ROADWAY CLASSIFICATION:
URBAN COLLECTOR (40 MPH DESIGN SPEED)

PERKINS ROAD ROADWAY CLASSIFICATION:
UA-2 (45 MPH DESIGN SPEED)

PICARDY AVE. CLASSIFICATION:
LOCAL (35 MPH DESIGN SPEED)

BACKCOURT DRIVE, MAUREEN CONNOLLY DRIVE, ROD LAVER CONNECTOR, & ROD LAVER AVE. ROADWAY CLASSIFICATION:
LOCAL (30 MPH DESIGN SPEED)

NOTE:
THE 1997 STANDARD SPECIFICATIONS FOR PUBLIC WORKS CONSTRUCTION, CITY OF BATON ROUGE AND PARISH OF EAST BATON ROUGE, LOUISIANA, AS AMENDED BY THE PROJECT SPECIFICATIONS, SHALL GOVERN ON THIS PROJECT EXCEPT AS NOTED. IN ADDITION, PORTIONS OF THE LOUISIANA STANDARD SPECIFICATIONS FOR ROADS AND BRIDGES, 2016 EDITION, SHALL APPLY AS NOTED.

TYPE OF CONSTRUCTION:
EMBANKMENT, DRAINAGE STRUCTURES, ROADWAY BRIDGES, AND OTHER APPURTENANCES.

DATUM USED: VERTICAL - '88 NAVD; 41-87 & 6-W284-76 E.B.R. PARISH
HORIZONTAL - NAD '83 (1992) PID-BJ4028

LAYOUT MAP
-1000 0 1000 2000 3000
SCALE IN FEET

PREPARED & RECOMENDED FOR APPROVAL — Gerald G. Menard
DATE 9/16/2020 — CONSULTING ENGINEER

STATE OF LOUISIANA
GERALD G. MENARD
License No. 20437
PROFESSIONAL ENGINEER
IN
CIVIL ENGINEERING

PREPARED & RECOMENDED FOR APPROVAL
DATE 9/17/20 — MOVEBR PLAN PROGRAM MANAGER

RECOMENDED FOR APPROVAL
DATE 9/24/20 — CHIEF TRAFFIC ENGINEER

RECOMENDED FOR APPROVAL
DATE 9/24/2020 — CHIEF DESIGN & CONSTRUCTION ENGINEER

APPROVED
DATE 9-25-20 — DIRECTOR OF TRANSPORTATION & DRAINAGE

EVANS-GRAVES ENGINEERS, INC.
ENGINEERING CONSULTANTS 9029 JEFFERSON HWY. BATON ROUGE, LA. 70809 (225)926-1620

SHEET NUMBER 1
PARISH EAST BATON ROUGE
CITY BATON ROUGE
PROJECT 12-CS-HC-0043
DESIGNED EG
CHECKED GGM
DETAILED SJA
CHECKED GGM
SERIES NUMBER
NO. DATE REVISION OR CHANGE ORDER DESCRIPTION BY

TITLE SHEET AND LAYOUT MAP
MALL OF LOUISIANA BOULEVARD

EVANS-GRAVES ENGINEERS

9/16/2020 08:54
F:\00_PROJECTS\12-500\Sheet_Sets\Construction - Revised\P2 Sheet 001 TitleSheet.dgn

INDEX TO SHEETS

SHEET NO.	DESCRIPTION
1	TITLE SHEET AND LAYOUT MAP
1a	INDEX TO SHEETS AND GENERAL NOTES
2	SUMMARY OF ESTIMATED QUANTITIES
3	TYPICAL SECTIONS AND DETAILS
7-10	PLAN / PROFILES (MALL OF LA BLVD.)
32,33,42	DRAINAGE PLAN AND PROFILES (MALL OF LA BLVD.)
52	EXISTING DRAINAGE MAP
54	DESIGN DRAINAGE MAP
62-63	GEOMETRIC LAYOUT & REFERENCE TIES
76	SHARED USE PATH DETAILS
201-233	BRIDGE PLANS (DAWSON CREEK BRIDGES)
270	BRIDGE RAILING DETAILS
280-284	MISCELLANEOUS SPAN AND GIRDER DETAILS
285-286	STRIP SEAL JOINT DETAILS (4")
287	UNDERDRAINS FOR CONCRETE APPROACH SLABS (ASD-SA)
288	LIGHT SUPPORT BLISTER DETAILS
301-307	RIGHT-OF-WAY MAPS (PHASE I)
308-322	RIGHT-OF-WAY MAPS (PHASE II)
553-555	SOIL BORING LOGS

SHEET NO.	STANDARD PLAN
600-602	CONCRETE PAVEMENT DETAILS (502-01)
603	YEAR PLATES FOR CONCRETE STRUCTURES (601-04)
604	PRECAST CONCRETE PILES (605-01)
605	STD. BEDDING AND BACKFILL DETAILS FOR STORM DRAINAGE CONDUIT (701-01)
606	RIVETED RETICULINE OR FABRICATED BAR SINGLE GRATE INLET (702-12)
607	CAST-IN-PLACE DRAINAGE STRUCTURES (STRUCTURAL DETAILS)(702-96)
608	PRECAST DRAINAGE STRUCTURE (STRUCTURAL DETAILS)(702-97)
609-611	FRAMES, GRATES & COVERS FOR INLETS & MANHOLES (702-99)
612-622	STORM WATER POLLUTION PREVENTION PLAN (903-01)
623-624	TEMPORARY EROSION INSTALLATION DETAILS (903-02)
625	TEMPORARY TRAFFIC CONTROL LOCAL APPLICATIONS (905-30)

LADOTD STANDARD PLANS

650-659	HIGHWAY GUARD RAILS (GR-200), 2-14-17
660	CAST-IN-PLACE BARRIER RAILING AND TRANSITION (BR-01), 7-18-16
661	STEEL WIRE BAR SUPPORT (SWBS-100), 11-15-12
706-709	ROADWAY CROSS SECTIONS

GENERAL NOTES (PACKAGE 2)

THIS SET OF CONTRACT DOCUMENTS IS A PORTION OF THE OVERALL MALL OF LOUISIANA BOULEVARD PROJECT AS DEPICTED ON THE TITLE SHEET LAYOUT MAP. THE PROJECT OWNER, CITY-PARISH OF EAST BATON ROUGE, HAS SPLIT THE OVERALL PROJECT INTO SIX PACKAGES AS FOLLOWS:

PACKAGE 1: CLEARING AND GRUBBING
PACKAGE 2: MALL OF LOUISIANA BOULEVARD BRIDGES OVER DAWSON CREEK
PACKAGE 3: MALL OF LOUISIANA BOULEVARD ROADWAY (END DAWSON CREEK BRIDGES TO END OF PROJECT), PICARDY AVE, RR BRIDGE, AND PUMP STATION.
PACKAGE 4: MALL OF LOUISIANA BOULEVARD ROADWAY (PERKINS TO DAWSON CREEK)
PACKAGE 5: BACKCOURT DRIVE AND BRIDGE OVER DAWSON CREEK
PACKAGE 6: PERKINS ROAD, PROJECT STRIPING, PROJECT SIGNING, AND PROJECT SIGNALIZATION.

CONSTRUCTION OF OTHER PORTIONS OF OVERALL MALL OF LOUISIANA BOULEVARD PROJECT WILL BE ONGOING FOR THE DURATION OF THIS PROJECT PACKAGE. THE CITY-PARISH PROJECT ENGINEER WILL FACILITATE COORDINATION BETWEEN PACKAGE CONTRACTORS.

THE INTENT OF THIS PACKAGE IS THE CONSTRUCTION OF THE TWO MALL OF LA BRIDGES OVER DAWSON CREEK.

FOR INFORMATIONAL PURPOSES ONLY, THE RIGHT-OF-WAY MAPS FOR THE MALL OF LOUISIANA BOULEVARD HAS BEEN INCLUDED. THE CONTRACTOR SHALL DETERMINE HIS SITE ACCESS POINTS BASED ON THE RIGHT-OF-WAY MAPS.

CONTRACTOR SHALL BARRICADE ACCESS TO BRIDGES WHILE NOT ON SITE WORKING TO PREVENT USE OF THE BRIDGE PRIOR TO DAWSON CREEK BRIDGES BEING COMPLETED.

EXISTING PORTIONS OF MALL OF LOUISIANA BOULEVARD SHALL REMAIN IN SERVICE THROUGHOUT CONSTRUCTION. PROJECT ENGINEER SHALL SPECIFY TEMPORARY SIGNS AND BARRICADES REQUIRED.

THE COMPLETE DRAINAGE SYSTEM FOR MALL OF LOUISIANA BOULEVARD WILL NOT BE IN PLACE DURING THE CONSTRUCTION OF THE DAWSON CREEK BRIDGES. CONTRACTOR SHALL MAINTAIN THE EXISTING DRAINAGE FOR THE LAND ADJACENT TO THE DAWSON CREEK BRIDGES.

CONTRACTOR SHALL PROVIDE AND MAINTAIN "TRUCKS ENTERING HIGHWAY" SIGNS WHEREVER SITE ACCESS FROM A PUBLIC STREET IS UTILIZED. SEE STANDARD PLAN 905-30 FOR GUIDANCE.

THIS PROJECT INCLUDES THE FOLLOWING ITEMS:

DAWSON CREEK CHANNEL EXCAVATION AND EMBANKMENT AND THE REQUIRED RIPRAP WITH LIMITS SHOWN ON PLAN SHEET.

REMOVE EXISTING ASPHALT SURFACING ON EXISTING TRAIL FOR AREA CALLED OUT ON PLAN SHEETS. ALSO REMOVE EXISTING PEDESTRIAN BRIDGE OVER OUTFALL.

DRAINAGE STRUCTURES NUMBERS, 184, 185, 186, AND 200

ROADWAY EMBANKMENT/EXCAVATION NORTHBOUND AND SOUTHBOUND, STATION 115+45 TO 123+37

NORTH BOUND AND SOUTH BOUND MALL OF LOUISIANA BRIDGES OVER DAWSON CREEK.

FOUR CONCRETE BRIDGE APPROACHES SLABS. THIS INCLUDES BEGIN AND END APPROACHES FOR NORTH BOUND AND SOUTH BOUND BRIDGES. CONSTRUCT 4 BOLSTER BLOCKS AS PER STANDARD PLAN 502-01.

THE MULTI-USE PATH NEAR THE DAWSON CREEK BRIDGE. THE LIMITS OF THE AREA TO BE CONSTRUCTED THIS PROJECT IS SHOWN ON DETAIL SHEET "MULTI-USE PATH DETAILS."

PROVIDE FOR FUTURE GUARDRAIL CONNECTIONS ON ENDS OF BARRIERS WHERE GUARDRAIL IS SHOWN ON PLANS. GUARDRAIL SHALL BE SUPPLIED AND INSTALLED BY OTHERS.

STATE OF LOUISIANA
GERALD G. MENARD
License No. 20437
PROFESSIONAL ENGINEER
IN
CIVIL ENGINEERING
9/23/2020

SHEET NUMBER 1a
PARISH: EAST BATON ROUGE
CITY: BATON ROUGE
PROJECT: 12-CS-HC-0043
DESIGNED: EG
CHECKED: GGM
DETAILED: MLR
CHECKED: GGM
SERIES NUMBER
NO. | DATE | REVISION OR CHANGE ORDER DESCRIPTION | BY

INDEX TO SHEETS AND GENERAL NOTES

MALL OF LOUISIANA BOULEVARD

EVANS-GRAVES ENGINEERS

9/23/2020 08:31

F:\00_PROJECTS\12-500\Sheet_Sets\Construction - Revised\P2 Sheet 001a IndexToSheets.dgn

ITEM NO.	DESCRIPTION	UNIT	QUANTITIES	
			AS BID	AS BUILT
2010100	CLEARING AND GRUBBING	LUMP	LUMP	
2020100	REMOVAL OF STRUCTURES AND OBSTRUCTIONS	LUMP	LUMP	
2020400	REMOVAL OF ASPHALT SURFACING	S.Y.	207	
2030100	GENERAL EXCAVATION	C.Y.	59	
2030200	EMBANKMENT	C.Y.	8,573	
2030400	CHANNEL EXCAVATION	C.Y.	3,470	
2031000	CHANNEL BACKFILL	C.Y.	2,820	
2031100	SURCHARGE EMBANKMENT	C.Y.	481	
6010100	CLASS 6A4000 CONCRETE	C.Y.	403.93	
6010300	CLASS 6.5A4200 CONCRETE	C.Y.	675.65	
6010500	REINFORCING STEEL	LB.	276,694	
6010600	BRIDGE APPROACH SLAB	S.Y.	546.6	
6010802	TYPE II PRESTRESSED CONCRETE GIRDERS (8.5KSI)	L.F.	3,452.0	
6010900	CONCRETE BRIDGE RAILING (32")	L.F.	1,586.0	
6010903	CONCRETE /METAL BRIDGE RAILING	L.F.	337.9	
6020600	STRUCTURAL STEEL	LUMP	LUMP	
6050116	16" PRECAST CONCRETE PILES	L.F.	2,480	
6050124	24" PRECAST CONCRETE PILES	L.F.	5,532	
7010242	42" REINFORCED CONCRETE PIPE	L.F.	120	
7010548	48" BITUMINOUS COATED CORRUGATED METAL PIPE	L.F.	90	
7010560	60" BITUMINOUS COATED CORRUGATED METAL PIPE	L.F.	120	
7020310	RETICULINE GRATE INLET (702-12)	EA.	1	
7040504	4" CAST-IN-PLACE CONCRETE REVETMENT	S.Y.	578.7	
7050302	30 LB. RIPRAP	TON	2,116	
7050304	130 LB. RIPRAP	TON	251	
9010600	STEEL PIPE RAILING	L.F.	231	
9030200	TEMPORARY HAY BALES	EA.	30	
9030500	TEMPORARY SILT FENCING	L.F.	3,100	
9030800	SEED	LB.	90	
9030900	FERTILIZER	LB.	3,000	
9031000	WATER	M-GAL	20	
9031300	FIBER MULCH	S.Y.	12,100	
9031400	EROSION CONTROL MAT	S.Y.	500	
9031500	SLAB SOD	S.Y.	535	
9031600	STORM WATER POLLUTION PREVENTION PLAN	LUMP	LUMP	
9050100	TEMPORARY SIGNS AND BARRICADES	LUMP	LUMP	
9070306	6" CONCRETE WALK	S.Y.	378.6	
9090100	MOBILIZATION	LUMP	LUMP	
9900001	DYNAMIC MONITORING	EA.	6	
9900002	STRIP SEAL JOINTS	L.F.	268.8	
9900003	VIBRATION MONITORING	EA.	108	
9900004	SETTLEMENT PLATE INSTALLATION AND MONITORING	EA.	4	
9900005	LIGHT SUPPORT BLISTER	EA.	4	

SUMMARY OF ESTIMATED QUANTITIES

STATE OF LOUISIANA
GERALD G. MENARD
LICENSED PROFESSIONAL ENGINEER IN CIVIL ENGINEERING
9/23/2020

EVANS-GRAVES ENGINEERS

CITY OF BATON ROUGE PARISH OF EAST BATON ROUGE

SUMMARY OF ESTIMATED QUANTITIES

MALL OF LOUISIANA BOULEVARD

NO.	DATE	REVISION OR CHANGE ORDER DESCRIPTION	BY

DESIGNED PG
CHECKED GGM
DETAILED MLR
CHECKED GGM
SERIES NUMBER

PARISH EAST BATON ROUGE
CITY BATON ROUGE
PROJECT 12-CS-HC-0043

SHEET NUMBER 2

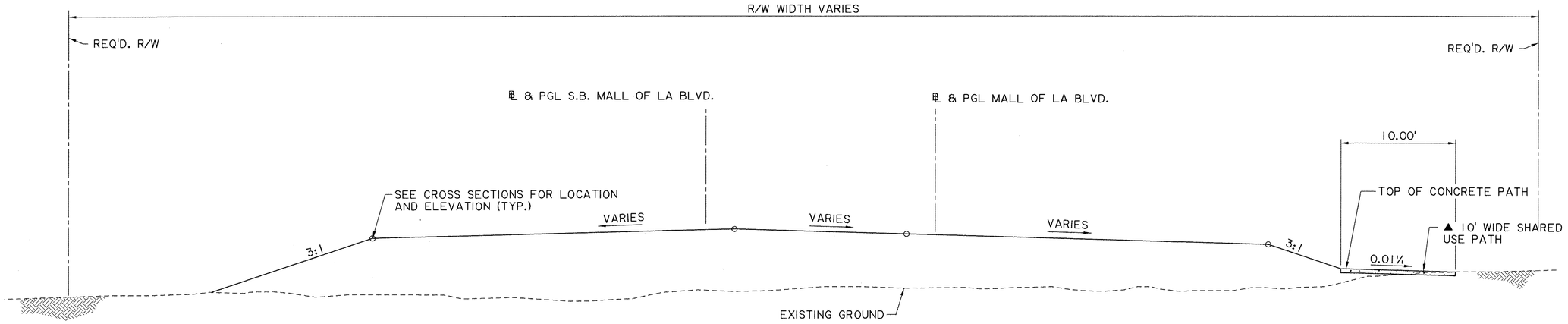

TYPICAL GRADING SECTION STA. 115+45 TO BEGIN BRIDGE APPROACH SLAB

TYPICAL GRADING SECTION END BRIDGE APPROACH SLAB TO STA. 123+37

▲ SHARED USE PATH
CONCRETE WALK (6" THICK)
FOR LIMITS TO BE CONSTRUCTED
SEE SHT. 76.

ROADWAY EMBANKMENT, CREEK GRADING EMBANKMENT, SURCHARGE AND MONITORING NOTES:

1. 5' THICK EMBANKMENTS ARE ESTIMATED TO SETTLE APPROXIMATELY 2" AND 7' THICK EMBANKMENTS ARE ESTIMATED TO SETTLE 3". ESTIMATED TIME FOR SETTLEMENT IS 4 MONTHS. THESE ESTIMATES ARE "ORDER OF MAGNITUDE" ESTIMATES AND COULD VARY SIGNIFICANTLY.
2. PLACE TWO SETTLEMENT PLATES AT LOCATIONS SHOWN BELOW AND ANOTHER TWO AS DIRECTED BY PROJECT ENGINEER. SURVEY INITIAL ELEVATIONS.

STATION	LOCATION
117+30	2' RT.
122+00	2' LT.

3. PLACE EMBANKMENT, SURCHARGE, AND MONITOR ELEVATIONS IN ACCORDANCE WITH SPECIAL PROVISIONS.
4. BEGIN 4 MONTH SETTLEMENT PERIOD AND MONITOR ELEVATIONS OF SETTLEMENT PLATES IN ACCORDANCE WITH SPECIAL PROVISION.
5. PILE DRIVING SHALL NOT OCCUR UNTIL AFTER EMBANKMENT, SURCHARGE, AND CREEK BANK GRADING FILL HAVE SUFFICIENTLY SETTLED AS DETERMINED BY THE PROJECT ENGINEER.
6. COST FOR EXCAVATION FOR END BENT CONSTRUCTION SHALL BE INCLUDED IN BID PRICE FOR SURCHARGE ENBANKMENT.

GENERAL NOTES:

1. EROSION CONTROL MAY CONSIST OF SEEDING AND FERTILIZER, FIBER MULCH, EROSION CONTROL MATS, SLAB SOD, OR A COMBINATION OF ANY AS DIRECTED BY THE PROJECT ENGINEER. SEE SHEET 205 FOR ADDITIONAL EROSION CONTROL REQUIREMENTS. THE PLAN QUANTITIES FOR SEEDING, FERTILIZER, AND MULCH ARE SUFFICIENT FOR BOTH INITIAL AND FINAL EROSION CONTROL.
2. THE GRADING SECTION TO BE USED AT ANY PARTICULAR LOCATION SHALL BE AS SHOWN ON THE CROSS SECTIONS, UNLESS OTHERWISE DIRECTED BY THE PROJECT ENGINEER.
3. CONTRACTOR SHALL PROTECT UPSTREAM END OF PIPE 184 WITH HAY BALES OR 30# RIPRAP. COST OF THIS EROSION CONTROL SHALL BE INCLUDED WITH COST OF PIPE.

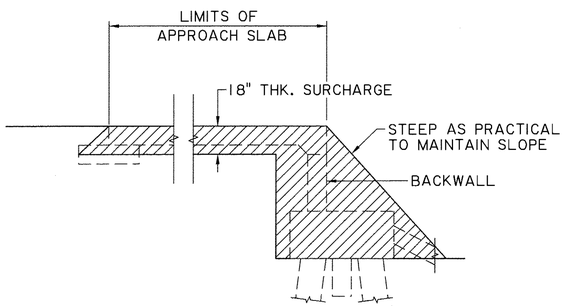

SECTION VIEW

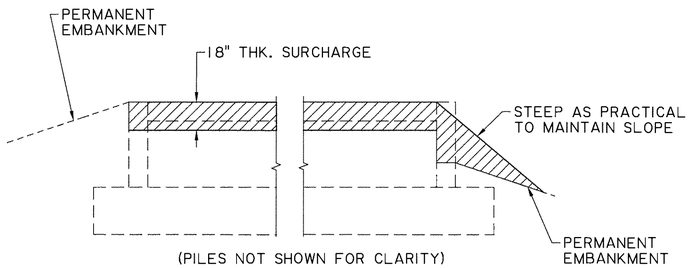

HALF ELEV. BEYOND WINGWALL

HALF ELEV. NEAR BACKWALL

DENOTES LIMITS OF SURCHARGE

SURCHARGE LIMITS
NTS

STATE OF LOUISIANA
GERALD G. MENARD
License No. 20437
PROFESSIONAL ENGINEER
IN
CIVIL ENGINEERING
9/23/2020

SHEET NUMBER 3

PARISH: EAST BATON ROUGE
CITY: BATON ROUGE
PROJECT: 12-CS-HC-0043

DESIGNED PG
CHECKED GGM
DETAILED VMB
CHECKED GGM
SERIES NUMBER

NO. | DATE | BY | REVISION OR CHANGE ORDER DESCRIPTION

TYPICAL SECTION & DETAILS

MALL OF LOUISIANA BOULEVARD

EVANS-GRAVES ENGINEERS

F:\00_PROJECTS\12-500\Sheet_Sets\Construction - Revised\P2 Sheet 003 Typical.dgn 9/23/2020 08:31

F:\00_PROJECTS\12-500\Sheet_Sets\Construction - Revised\P2 Sheet 007 Plan Pro.dgn 9/10/2020 08:31

BEGIN MALL OF LA BLVD. S.B. ALIGNMENT
P.C. STA. 213+07.19 (S.B.) =
STA. 113+07.19 , 14.00' LT.

℄ MALL OF LA BLVD.
CURVE DATA
P.I. STA. 114+94.89
Δ = 23°37'17.2" LT.
D = 7°15'09.47"
T = 165.19'
L = 325.69'
R = 790.00'

Scale : 1" = 20'

113+73.74
71.70' LT.
REQ'D R/W

P.C. STA. 213+07.19

P.C. STA. 113+29.70 (N.B.)

115+00.00
80.00' LT.

116+00.00
85.00' LT.

P.T. STA. 216+41.95
P.T. STA. 116+55.39 (N.B.)

117+20.00
100.00' LT.
REQ'D R/W

117+60.00
65.00' LT.

LIMITS OF CONST.

REQ'D. 10' SHARED USE PATH

STA. 113+91.37 MALL OF LA BLVD. =
STA. 50+00.00 MAUREEN CONNOLLY DR

STA. 217+26.00
BEGIN BRIDGE

23.50'
14.00'
23.50'

℄ & PGL S.B. MALL OF LA BLVD.

N28°39'28.6"E

+80

VARIES

REQ'D. 4" THICK
INCIDENTAL PAVING

+60

N5°02'11.4"E

20.00

28.50'
VARIES
40.33'

N5°02'11.4"E

℄ & PGL MALL OF LA BLVD.

STA. 113+65
END PRIVACY WALL

S61°16'08.1"E

℄ MAUREEN CONNOLLY DRIVE

STA. 114+17
BEGIN PRIVACY WALL

REQ'D. 10' SHARED USE PATH

P.C. STA. 217+92.16

P.C. STA. 117+84.32 (N.B.)

STA. 117+53.00
BEGIN BRIDGE

REQ'D R/W
113+64.08
53.01' RT.

EXIST. R/W

REQ'D R/W

114+10.74
56.46' RT.

EXIST. R/W

STA. 115+25.95

115+25.56
78.04' RT.

STA. 116+00.00
END PRIVACY WALL

116+00.00
85.00' RT.

LIMITS OF CONST.

REQ'D R/W

117+50.00
100.00' RT.

NORTHBOUND LANES

+65
ELEV. 32.5

+17
ELEV. 32.5

TOP OF PRIVACY WALL

+00
ELEV. 32.5

REQ'D. SURCHARGE
(SEE SHT. 3 FOR DETAILS)

STA. 116+50.00
EL. 26.33'

2.390%

P.V.I. 114+20.00
ELEV. 25.64

200' V. C.

10' WALL

11' WALL

0.400%

-0.491%

3:1

REQUIRED
EMBANKMENT
(PACKAGE 2)

+17
ELEV. 21.5

PROFILE GRADE (NORTHBOUND LANES)

P.V.I. 115+91.00
ELEV. 24.80

120' V. C.

EXISTING GROUND (UNDER NORTHBOUND BASELINE)

+65
ELEV. 22.5

BOTTOM OF PRIVACY WALL

STA. 115+45.00
BEGIN EMBANKMENT
(PACKAGE 2)

+00
ELEV. 21.5

32 28 24 20 16 12 8 4 0

19.81 25.16 | 19.64 25.50 | 19.28 25.25 | 19.84 25.61 | 20.89 27.41 | 10.50 29.80

113+00 114+00 115+00 116+00 117+00 118+00

STATE OF LOUISIANA
GERALD G. MENARD
License No. 20457
PROFESSIONAL ENGINEER
IN
CIVIL ENGINEERING
9/10/2020

SHEET NUMBER	7
PARISH	EAST BATON ROUGE
CITY	BATON ROUGE
PROJECT	12-CS-HC-0043
DESIGNED EG	
CHECKED GGM	
DETAILED MLR	
CHECKED GGM	
DATE	
SHEET	

REVISION OR CHANGE ORDER DESCRIPTION | BY | DATE | NO.

PLAN / PROFILE
MALL OF LA BLVD.
MALL OF LOUISIANA BOULEVARD

EVANS-GRAVES ENGINEERS

F:\00_PROJECTS\12-500\Sheet_Sets\Construction - Revised\P2 Sheet 008 Pan Pro SB.dgn 9/10/2020 08:31

S.B. MALL OF LA BLVD.
CURVE DATA
P.I. STA. 214+76.98
Δ = 23°37'17.2" LT.
D = 7°03'22.07"
T = 169.79'
L = 334.76'
R = 812.00'

Scale : 1" = 20'

BEGIN PAULAT BOULEVARD S.B. ALIGNMENT
P.C. STA. 213+07.19 (S.B.) = P.C. STA. 213+07.19 (N.B.)
STA. 113+07.19 , 14.00' LT.

113+73.74
71.70' LT.

REQ'D R/W

115+00.00
80.00' LT.

REQ'D. 10' SHARED USE PATH

LIMITS OF CONST.

116+00.00
85.00' LT.

P.T. STA. 216+41.95 (N.B.)
P.T. STA. 116+55.39

117+20.00
100.00' LT.

117+60.00
65.00' LT.

REQ'D R/W

STA. 217+26.00
BEGIN BRIDGE

28.50'
VARIES
40.33'

23.50'
14.00'
23.50'

N28°39'28.6"E

℄ & PGL S.B. MALL OF LA BLVD.

VARIES

215+21.00
12.50' RT.

216+21.00
1.50' RT.

20.00

N5°02'11.4"E

N5°02'11.4"E

REQ'D. PRIVACY WALL

℄ & PGL MALL OF LA BLVD.

℄ MAUREEN CONNOLLY DRIVE

50+00

REQ'D. 10' SHARED USE PATH

P.C. STA. 217+92.16

STA. 117+53.00
BEGIN BRIDGE

P.C. STA. 117+84.32 (N.B.)

REQ'D R/W

LIMITS OF CONST.

REQ'D. PRIVACY WALL

114+10.74
56.46' RT.

115+25.56
78.04' RT.

116+00.00
85.00' RT.

117+50.00
100.00' RT.

SOUTHBOUND LANES

186' V. C.

P.V.I. 213+07.19
ELEV. 25.19

P.V.I. 213+68.00
ELEV. 25.43

STA. 216+47.00
EL. 27.81'

REQ'D. SURCHARGE
(SEE SHT. 3 FOR DETAILS)

2.390%

3:1

0.395%

PROFILE GRADE (SOUTHBOUND LANES)

EXISTING GROUND (UNDER SOUTHBOUND BASELINE)

STA. 215+20.00
BEGIN EMBANKMENT
(PACKAGE 2)

120' V. C.

280' V. C.

P.V.I. 215+21.00
ELEV. 24.80

EARTHWORK INCLUDED
IN PACKAGE 2

32 28 24 20 16 12 8 4 0

213+00 214+00 215+00 216+00 217+00 218+00

STATE OF LOUISIANA
GERALD G. MENARD
License No. 20437
PROFESSIONAL ENGINEER
IN
CIVIL ENGINEERING
9/10/2020

SHEET NUMBER	8
PARISH	EAST BATON ROUGE
CITY	BATON ROUGE
PROJECT	12-CS-HC-0043
DESIGNED EG / CHECKED GGM	
DETAILED MLR / CHECKED GGM	
DATE	
SHEET	

NO.	DATE	REVISION OR CHANGE ORDER DESCRIPTION	BY

PLAN / PROFILE
MALL OF LA BLVD.
MALL OF LOUISIANA BOULEVARD

EVANS-GRAVES ENGINEERS

F:\00_PROJECTS\12-500\Sheet_Sets\Construction - Revised\P2 Sheet 009 Plan Pro.dgn 9/10/2020 08:31

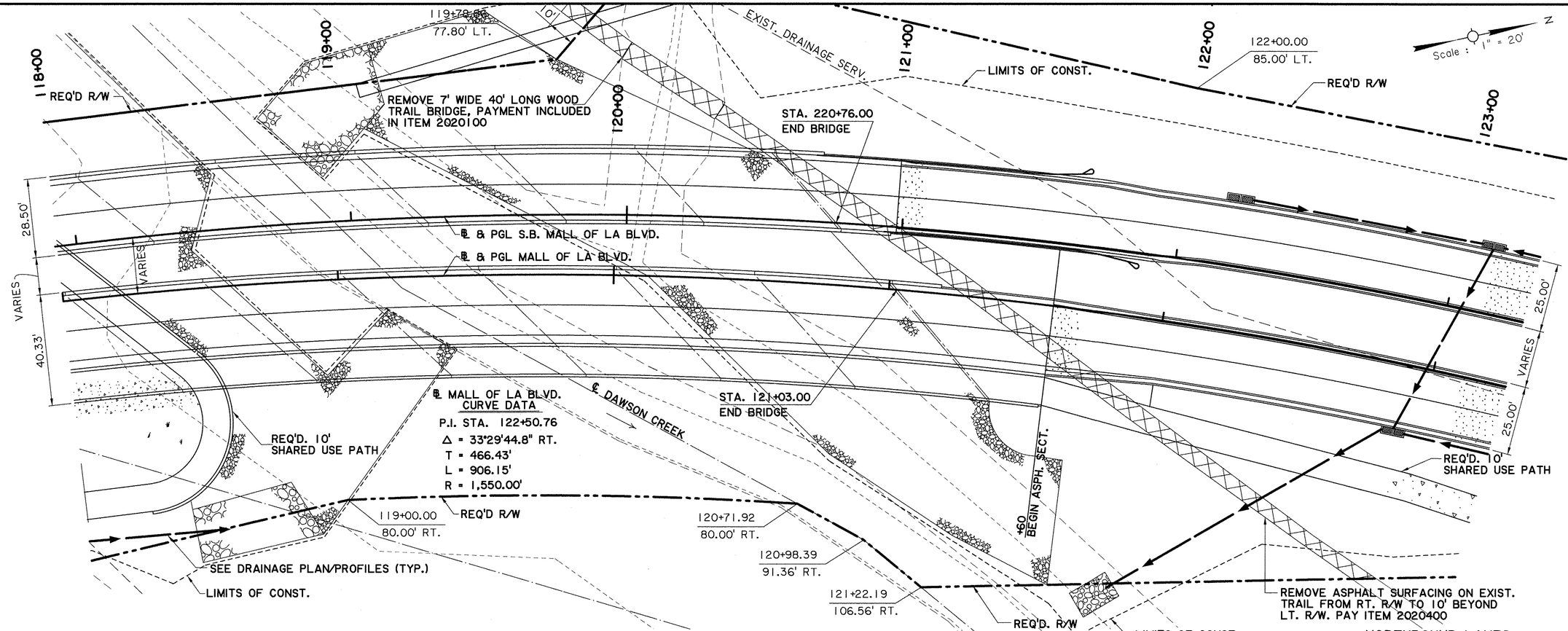

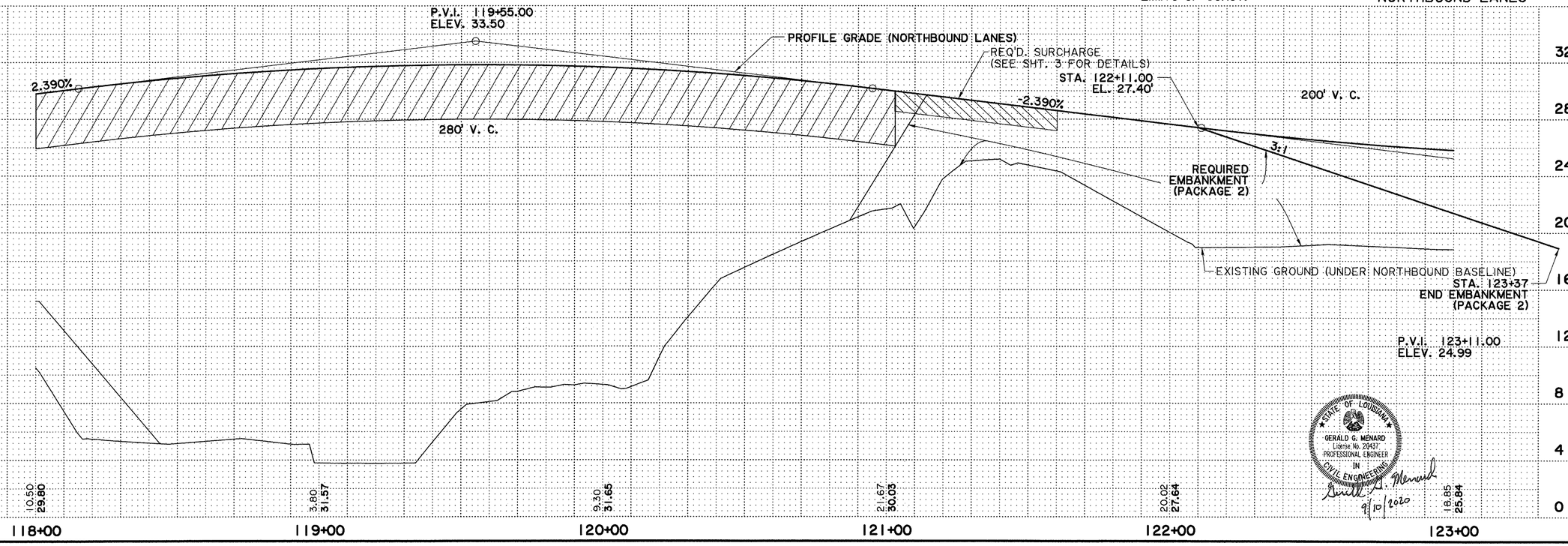

SHEET NUMBER	9
PARISH	EAST BATON ROUGE
CITY	BATON ROUGE
PROJECT	12-CS-HC-0043
DESIGNED / CHECKED	EG / GGM
DETAILED / CHECKED	MLR / GGM
DATE SHEET	

REVISION OR CHANGE ORDER DESCRIPTION | BY | DATE | NO.

PLAN / PROFILE
MALL OF LA BLVD.
MALL OF LOUISIANA BOULEVARD

STATE OF LOUISIANA
GERALD G. MÉNARD
License No. 29437
PROFESSIONAL ENGINEER
IN
CIVIL ENGINEERING
9/10/2020

CITY OF BATON ROUGE PARISH OF EAST

EVANS-GRAVES ENGINEERS

F:\00_PROJECTS\12-500\Sheet_Sets\Construction - Revised\P2 Sheet 010 Plan Pro SB.dgn 9/10/2020 08:31

218+00 219+00 220+00 221+00 222+00 223+00

REQ'D. R/W

EXIST. DRAINAGE SERV.

STA. 220+76.00
END BRIDGE

+98
BEGIN ASPHALT SECTION

LIMITS OF CONST.

28.50'

VARIES

℄ & PGL S.B. MALL OF LA BLVD.

℄ & PGL MALL OF LA BLVD.

N5°02'11.4"E

40.34'

25.00'

STA. 121+03.00
END BRIDGE

℄ S.B. MALL OF LA BLVD.
CURVE DATA
P.I. STA. 220+78.28
Δ = 20°55'03.5" RT.
D = 3°41'47.41"
T = 286.12'
L = 565.88'
R = 1,550.00'

℄ DAWSON CREEK

REQ'D. R/W

LIMITS OF CONST.

SOUTHBOUND LANES

REMOVE ASPHALT SURFACING ON EXIST. TRAIL FROM RT. R/W TO 10' BEYOND LT. R/W. PAY ITEM 2020400

P.V.I. 218+85.00
ELEV. 33.50

PROFILE GRADE (SOUTHBOUND LANES)

280' V. C.

-2.390%

STA. 221+99.00
EL. 26.23'

200' V. C.

REQ'D. SURCHARGE
(SEE SHT. 3 FOR DETAILS)

3:1

P.V.I. 222+41.00
ELEV. 24.99

EXISTING GROUND
(UNDER SOUTHBOUND BASELINE)

STA. 223+20.00
END EMBANKMENT
(PACKAGE 2)

EARTHWORK INCLUDED
IN PACKAGE 2

36 32 28 24 20 16 12 8 4 0

STATE OF LOUISIANA
GERALD G. MENARD
License No. 20437
PROFESSIONAL ENGINEER
IN
CIVIL ENGINEERING
9/10/2020

SHEET NUMBER 10

PARISH	CITY	PROJECT
EAST BATON ROUGE	BATON ROUGE	12-CS-HC-0043

	DESIGNED	DETAILED	DATE
	EG	MLR	
	CHECKED	CHECKED	SHEET
	GGM	GGM	

NO.	DATE	REVISION OR CHANGE ORDER DESCRIPTION	BY

PLAN / PROFILE
MALL OF LA BLVD.
MALL OF LOUISIANA BOULEVARD

EVANS-GRAVES ENGINEERS

F:\00_PROJECTS\12-500\Sheet_Sets\Construction - Revised\P2 Sheet 032 Drain Plan Pro NB.dgn 9/22/2020 11:28

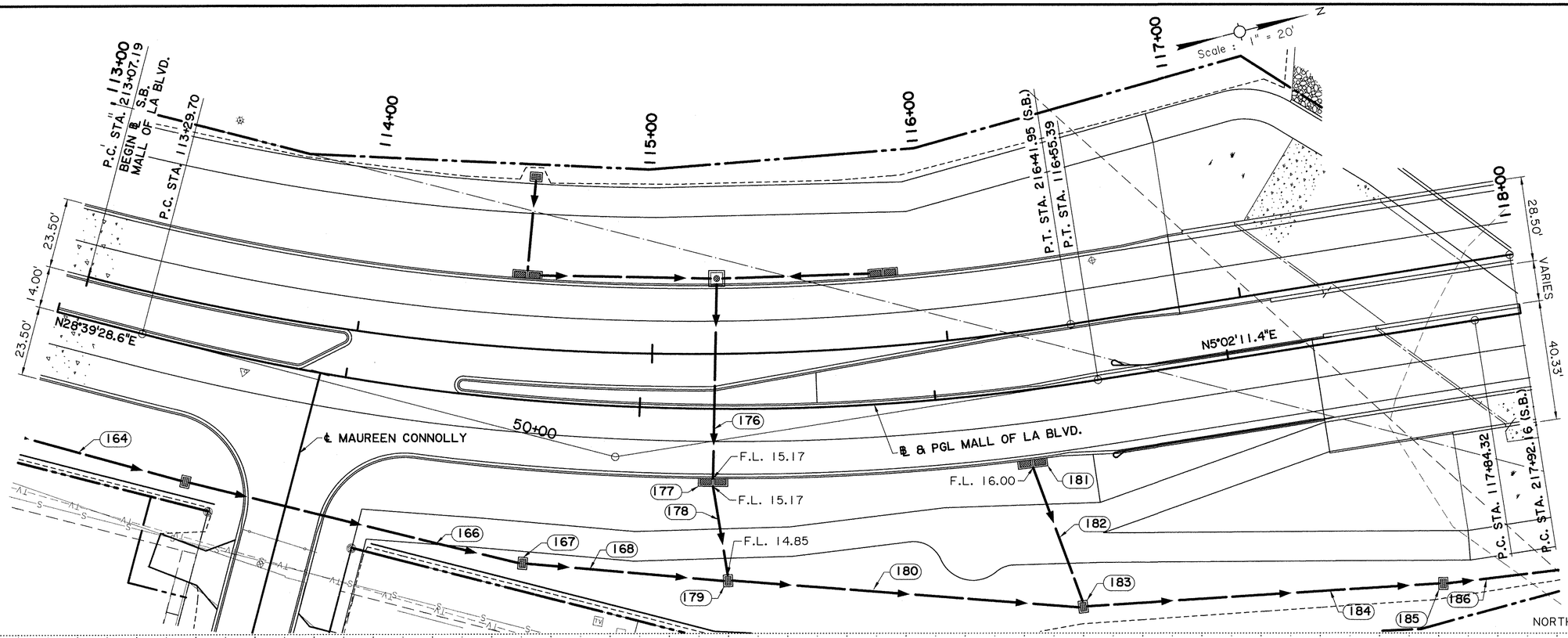

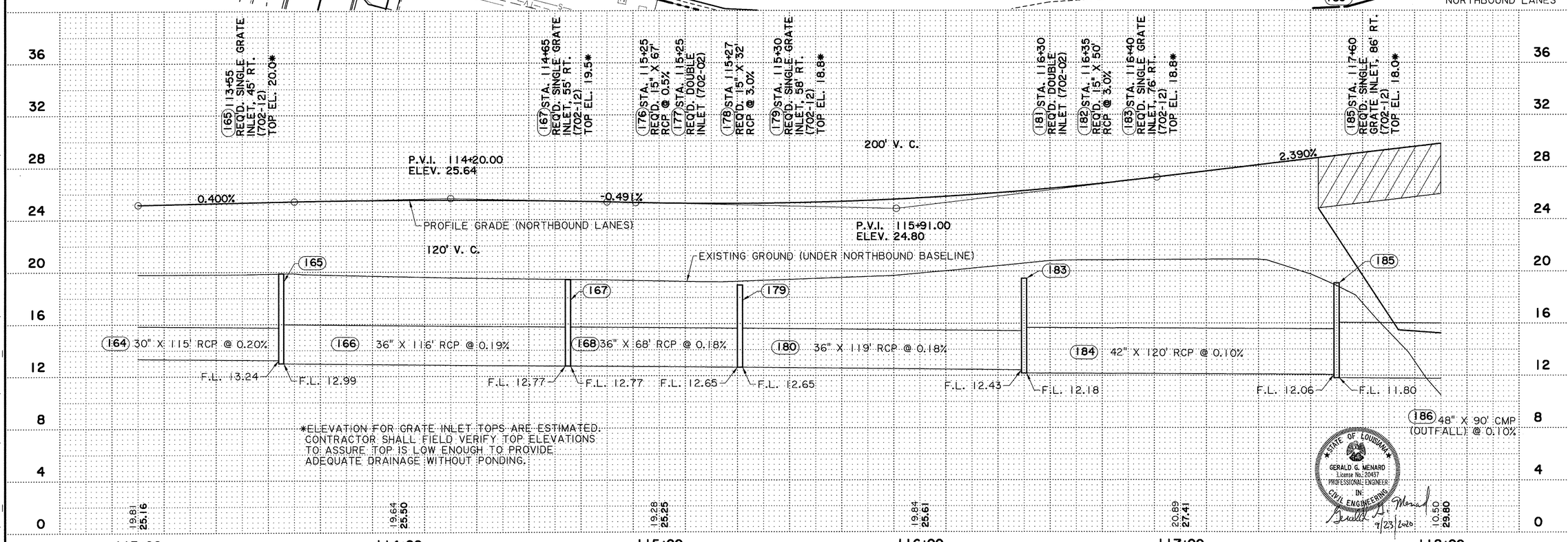

STATE OF LOUISIANA
GERALD G. MENARD
License No.: 20457
PROFESSIONAL ENGINEER
IN: CIVIL ENGINEERING
9/23/2020

SHEET NUMBER 32

PARISH EAST BATON ROUGE | CITY BATON ROUGE | PROJECT 12-CS-HC-0043

DESIGNED EG CHECKED GGM | DETAILED MLR CHECKED GGM | DATE | SHEET

NO.	DATE	REVISION OR CHANGE ORDER DESCRIPTION	BY

DRAINAGE PLAN AND PROFILE RT. SIDE
MALL OF LOUISIANA BOULEVARD

CITY OF BATON ROUGE ★ 1850 ★ PARISH OF EAST BATON ROUGE

EVANS-GRAVES ENGINEERS

F:\00_PROJECTS\12-500\Sheet_Sets\Construction - Revised\P2 Sheet 033 Drain Plan Pro NB.dgn 9/10/2020 08:31

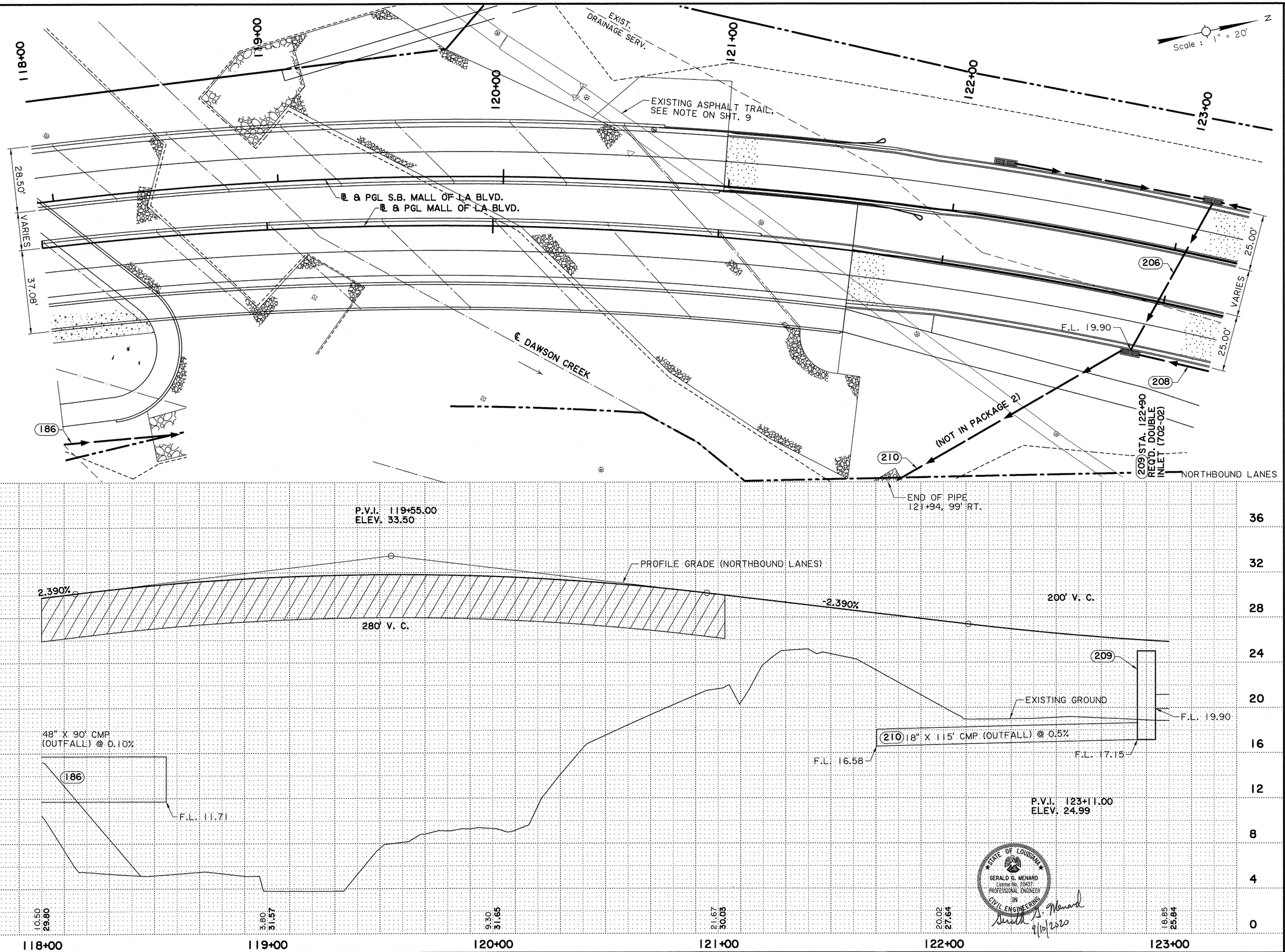

SHEET NUMBER 33

PARISH EAST BATON ROUGE | CITY BATON ROUGE | PROJECT 12-CS-HC-0043

DESIGNED EG | CHECKED GGM | DETAILED MLR | CHECKED GGM | DATE | SHEET

REVISION OR CHANGE ORDER DESCRIPTION | BY | DATE | NO.

DRAINAGE PLAN AND PROFILE RT. SIDE
MALL OF LOUISIANA BOULEVARD

STATE OF LOUISIANA
GERALD G. MENARD
License No. 20437
PROFESSIONAL ENGINEER
IN
CIVIL ENGINEERING
Gerald G. Menard
9/10/2020

EVANS-GRAVES ENGINEERS

END OF PIPE
STA. 219+05,
47' LT.

F.L. 11.00'

(200) 60" X 120' CMP @ 0.17%
(SEE NOTE BELOW)

EXIST.
DRAINAGE SERV.

EXIST. ASPHALT TRAIL,
SEE NOTE ON SHT 9.

(201) STA. 222+20
REQ'D. DOUBLE
INLET (702-02)

(202)

℄ & PGL S.B. MALL OF LA BLVD.

℄ & PGL MALL OF LA BLVD.

28.50'

VARIES

40.34'

25.00'

VARIES

25.00'

℄ DAWSON CREEK

SOUTHBOUND LANES

Scale : 1" = 20'

N

218+00 | 219+00 | 220+00 | 221+00 | 222+00 | 223+00

NOTE: SEE DESIGN DRAINAGE MAP FOR
LOCATION OF UPSTREAM END OF PIPE (200)

P.V.I. 218+85.00
ELEV. 33.50

200' V. C.

PROFILE GRADE (SOUTHBOUND LANES)

-2.390%

NOT INCLUDED IN
PACKAGE 2

(201)

(202) 15" X 85' RCP @ 0.10%

F.L. 20.14

EXISTING GROUND
(UNDER SOUTHBOUND BASELINE)

280' V. C.

P. I. 222+41.00
ELEV. 24.99

36 | 32 | 28 | 24 | 20 | 16 | 12 | 8 | 4 | 0

STATE OF LOUISIANA
GERALD G. MENARD
License No. 20637
PROFESSIONAL ENGINEER
IN
CIVIL ENGINEERING
9/10/2020

SHEET NUMBER	42
PARISH	EAST BATON ROUGE
CITY	BATON ROUGE
PROJECT	12-CS-HC-0043
DESIGNED	EG
CHECKED	GGM
DETAILED	MLR
CHECKED	GGM
DATE SHEET	

NO. | DATE | REVISION OR CHANGE ORDER DESCRIPTION | BY

DRAINAGE PLAN AND PROFILE LT. SIDE
MALL OF LOUISIANA BOULEVARD

EVANS-GRAVES ENGINEERS

F:\00_PROJECTS\12-500\Sheet_Sets\Construction - Revised\P2 Sheet 042 Drain Plan Pro SB.dgn 9/10/2020 08:31

22 AC. (INFORMATION OBTAINED FROM DRAINAGE LAYOUT FROM PROJ. 74-PR-CI-0401, BLUEBONNET BLVD.)

BLUEBONNET BLVD.

SWAGGART MINISTRIES CAMPUS

18"

18"

2-18"

ASPH. PARKING

MALL OF LOUISIANA

ASPH. PARKING

24" CMP OUTFALL

ASPH. PARKING

DAWSON CREEK

BASEBALL DIAMOND

2-48" CMP OUTFALL

BASEBALL DIAMOND

D.A.=77 Ac.

ASPH. PARKING

PERKINS ROWE

24" RCP OUTFALL

D.A.=11.4 Ac.

ENTERGY SUBSTATION

WARD CREEK

WIMBLEDON ESTATES SUBDIVISION

KCS RR

Scale : 1" = 200'

N

STATE OF LOUISIANA
GERALD G. MENARD
License No. 20437
PROFESSIONAL ENGINEER
IN
CIVIL ENGINEERING
9/10/2020

F:\00_PROJECTS\12-500\Sheet Sets\Construction - Revised\P2 Sheet 052 Exist DM.dgn 9/10/2020 08:31

SHEET NUMBER 52

PARISH	CITY	PROJECT
EAST BATON ROUGE	BATON ROUGE	12-CS-HC-0043

DESIGNED	EG	
CHECKED	GGM	
DETAILED	MLR	
CHECKED	GGM	
SERIES NUMBER		

NO.	DATE	REVISION OR CHANGE ORDER DESCRIPTION	BY

EXISTING DRAINAGE MAP

MALL OF LOUISIANA BOULEVARD

CITY OF BATON ROUGE * PARISH OF EAST BATON ROUGE

EVANS-GRAVES ENGINEERS

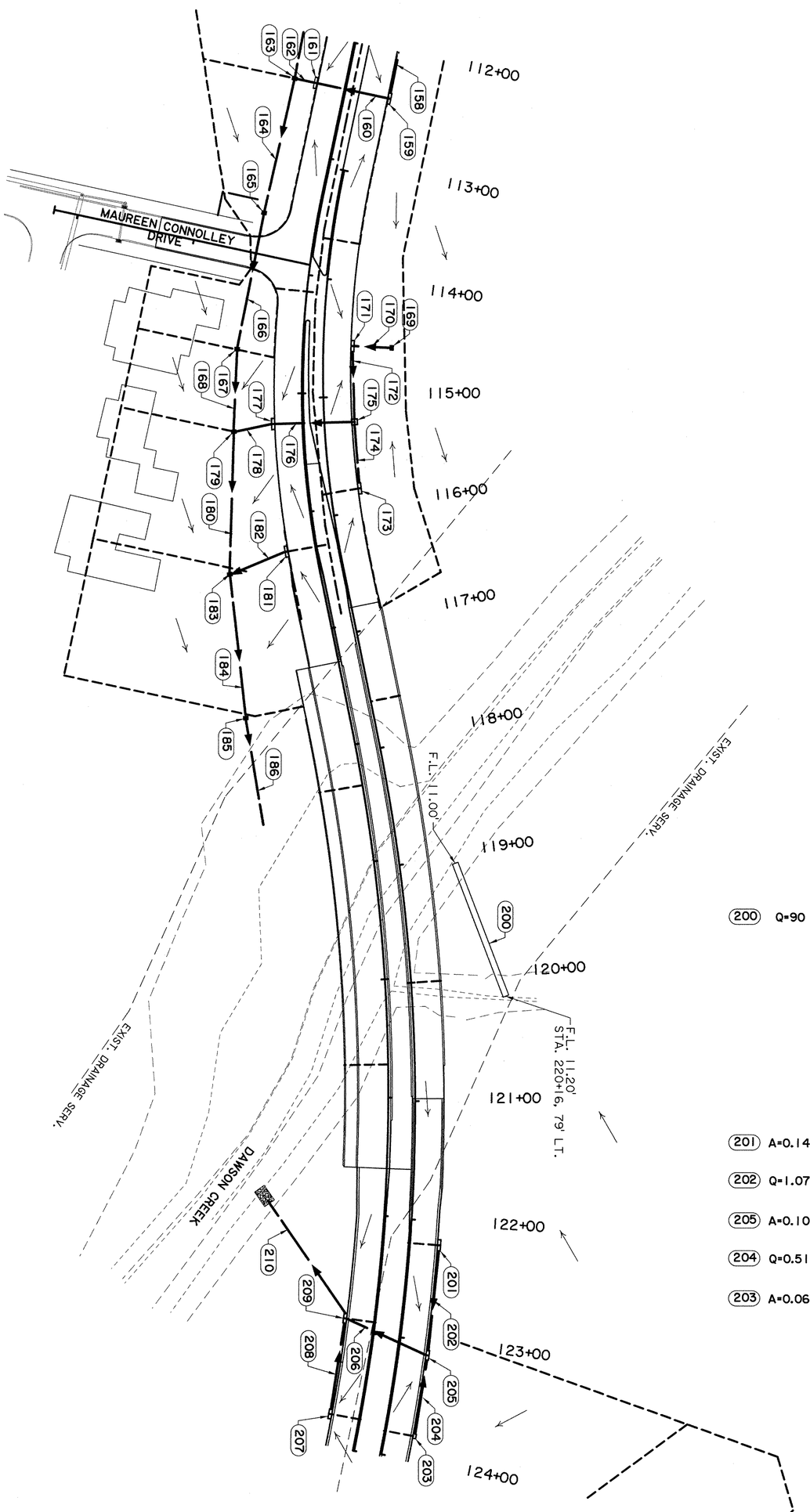

(184) Q=24.31

(185) A=0.52, C=0.40

(186) Q=25.00

(200) Q=90

(210) Q=3.64

(209) A=0.135, C=0.95

(206) Q=2.21

(208) Q=0.59

(207) A=0.077, C=0.95

(201) A=0.141, C=0.95

(202) Q=1.07

(205) A=0.103, C=0.95

(204) Q=0.51

(203) A=0.067, C=0.95

NOTE:
ALL DRAINAGE AREAS (A) ARE IN ACRES.
ALL FLOWS (Q) ARE IN CFS.

Scale: 1" = 50'

STATE OF LOUISIANA
GERALD G. MENARD
License No. 29437
PROFESSIONAL ENGINEER
IN
ENGINEERING
9/10/2020

EVANS-GRAVES ENGINEERS

CITY OF BATON ROUGE PARISH OF EAST BATON ROUGE

DESIGN DRAINAGE MAP

MALL OF LOUISIANA BOULEVARD

NO.	DATE	REVISION OR CHANGE ORDER DESCRIPTION	BY

DESIGNED	EG	PARISH	EAST BATON ROUGE
CHECKED	GGM		
DETAILED	MLR	CITY	BATON ROUGE
CHECKED	GGM		
SERIES NUMBER		PROJECT	12-CS-HC-0043

SHEET NUMBER 54

F:\00_PROJECTS\12-500\Sheet_Sets\Construction - Revised\P2 Sheet 062 Reference Ties.dgn 9/10/2020 08:32

GPS 4

GPS 4
W. STORM DRAIN BOLT — 37.75' — 52.63' — W. STORM DRAIN BOLT
CONC. NAIL — 21.03'

Scale : 1" = 100'

NOTES:

1. THE COORDINATES AND BEARINGS SHOWN HEREON ARE BASED ON LOUISIANA STATE PLANE COORDINATE SYSTEM, SOUTH ZONE (NAD 83 (2011) EPOCH 2010.0000) TO CONVERT FROM GRID BEARINGS TO TRUE BEARINGS USE: 0°07'15.1"

BASE STATIONS:

HAMM, AJ7833,	SJBI, DF8160	ILSU, DF5754
HAMMOND CORS ARP	SJB GROUP COOP CORS ARP	LOUISIANA STATE U CORS ARP
LAT=N30°30'47.052"	LAT=N30°23'45.831"	LAT=N30°24'26.706"
LONG=W090°28'03.428"	LONG=W091°06'25.855"	LONG=W091°10'48.915"
Y=223454.10	Y=210190.95	Y=211438.09
X=1083092.882	X=1021732.23	X=1014708.61

2. DISTANCES SHOWN ARE HORIZONTAL GROUND DISTANCES. TO CONVERT DISTANCES DERIVED FROM COORDINATES SHOWN HEREON TO HORIZONTAL GROUND DISTANCES, USE SCALE FACTOR: 0.999947527

STA. 510+00.00
N = 683085.46
E = 3355779.84

510+00

CONTROL PNT. GPS 4
N = 683255.34
E = 3355463.19
X MARK IN CONCRETE IN PAINTED STRIPED AREA IN CENTER OF PERKINS ROAD, IN FRONT OF MCDONALDS.

TBM - PRG
N.E. CORNER OF HEADWALL AT N.E CORNER OF PERKINS ROWE PARKING GARAGE ADJACENT TO PARIS PARKER SALON.
ELEV. 26.19

TBM - JS3
60d NAIL IN 30" WALNUT TREE, SE OF PLAYGROUND, NE OF J.W. TUCKER COMPLEX
ELEV. 21.16

S61°26'56.0"E

℄ PERKINS ROAD (LA 427)

515+00

℄ MALL OF LA BLVD. CURVE DATA
P.I. STA. 106+78.78
Δ = 3°15'35.9" LT
D = 1°16'23.7"
T = 128.05
L = 256.04'
R = 4500.00'

℄ MALL OF LA BLVD. CURVE DATA
P.I. STA. 111+18.34
Δ = 3°15'35.9" RT
D = 1°16'23.7"
T = 128.05
L = 256.04'
R = 4500.00'

℄ S.B. MALL OF LA BLVD. CURVE DATA
P.I. STA. 214+76.98
Δ = 23°37'17.2" LT
D = 7°03'22.1"
T = 169.79'
L = 334.76'
R = 812.00'

℄ MALL OF LA BLVD. CURVE DATA
P.I. STA. 114+94.89
Δ = 23°37'17.2" LT
D = 7°15'09.5"
T = 165.19'
L = 325.69'
R = 790.00'

℄ S.B. MALL OF LA BLVD. CURVE DATA
P.I. STA. 220+78.28
Δ = 20°55'03.5" RT
D = 3°41'47.4"
T = 286.12'
L = 565.88'
R = 1550.00'

℄ S.B. MALL OF LA BLVD. CURVE DATA
P.I. STA. 225+01.30
Δ = 12°34'41.2" RT
D = 4°24'26.5"
T = 143.27'
L = 285.39'
R = 1300.00'

220+00

225+00

125+00

TBM - JS3

120+00

BEGIN PROJECT BASELINE
STA. 99+81.22 (MALL OF LA BLVD.) =
STA. 521+26.71 (PERKINS ROAD-LA427)
N=682537.3853
E=3356763.9285

STA. 103+12.29 (MALL OF LA BLVD.) =
STA. 20+00.00 ROD LAVER CONNECTOR

215+00

BEGIN ℄ S.B. MALL OF LA BLVD.
PC 213+07.19
N=683719.1242
E=3357365.3402
14.00' LT. OF STA. 113+07.19

PT 216+41.95
N=684037.2571
E=3357461.6764

PC 217+92.16
N=684186.8796
E=3357474.8627

℄ & PGL S.B. MALL OF LA BLVD.

CONTROL PNT. 3014

PCC 223+58.03
N=684729.1648
E=3357625.2040

115+00

100+00

105+00

110+00

P.C. STA. 518+88.99
N = 682660.58
E = 3356560.72

CONTROL PNT. 3031

CONTROL PNT. 3026

520+00

PC 105+50.73
N=683037.1275
E=3357037.0528

PT 108+06.77
N=683265.1702
E=3357153.3866

N28°39'28.6"E

N25°23'52.8"E

N28°39'28.6"E

N05°02'11.4"E

N05°02'11.4"E

PT 116+55.39
N=684044.6690
E=3357482.1421

PC 117+84.32
N=684170.1035
E=3357493.4617

℄ & PGL MALL OF LA BLVD.

℄ MALL OF LA BLVD. CURVE DATA
P.I. STA. 122+50.76
Δ = 33°29'44.8" RT
D = 3°41'47.4"
T = 466.43'
L = 906.15'
R = 1550.00'

GPS 3

PERKINS RD. (LA 427) ℄ CURVE DATA
P.I. STA. 522+49.26
Δ = 16°06'19.0" RT
D = 2°15'00.0"
T = 360.27'
L = 715.79'
R = 2546.48'

S61°20'31.4"E

℄ & PGL MALL OF LA BLVD.

℄ ROD LAVER CONNECTOR

STA. 22+07.51
END ℄
N=682728.3762
E=3357104.7928

PC 109+90.29
N=683430.9548
E=3357232.0998

PT 112+46.33
N=683658.9975
E=3357348.4336

PC 113+29.70
N=683732.1555
E=3357388.4167
S61°16'08.1"E

STA. 113+91.37 (MALL OF LA BLVD.) =
STA. 50+00.00 (MAUREEN CONNOLLY DR.)
N=683787.3695
E=3357415.8511

STA. 52+20.00
END ℄
N=683681.6156
E=3357608.7659

P.T. STA. 526+04.78
N = 682235.17
E = 3357133.45

S45°20'37.0"E

525+00

FIBER OPTIC MARKER — 11.03' — W. STORM DRAIN BOLT — 6.44' — E. STORM DRAIN BOLT — 2.33' — GPS 3

CONTROL PNT. GPS 3 AND TBM
N = 682496.06
E = 3356759.82
ELEV. 36.54'
X MARK IN CONCRETE SIDEWALK. SOUTH SIDE OF PERKINS ROAD, BETWEEN BAUM'S FINE PASTRIES AND DRIVE TO APPLETREE STORAGE.

CORNER OF HEADWALL OF PARKING GRAGE — 13.52' — CENTER OF LIGHT POLE — 37.34' — CONTROL PNT 3031 — 94.24' — CORNER OF HEADWALL OF PARKING GARAGE AND TBM PRG ELEV. 26.19'

CONTROL PNT. 3031
N = 683209.23
E = 3356969.15
1/2" IRON ROD

15.74' — SET 60D NAIL — 17.80' — PK NAIL IN 6"CHINABERRY TREE — CONTROL PNT 3026 — SET 60D NAIL — 34.28'

CONTROL PNT. 3026
N = 683636.57
E = 3357198.16
1/2" IRON ROD

SET PK NAIL IN WOODEN BRIDGE — 36.60' — CONTROL PNT 3014 — 14.31' — SET PK NAIL IN 36" HICKORY TREE — 37.28' — SET PK NAIL IN WOODEN BRIDGE

CONTROL PNT. 3014
N = 684461.76
E = 3357500.80
1/2" IRON ROD

STATE OF LOUISIANA
GERALD G. MENARD
License No. 20437
PROFESSIONAL ENGINEER
IN
CIVIL ENGINEERING
9/10/2020

SHEET NUMBER 62

PARISH	CITY	PROJECT
EAST BATON ROUGE	BATON ROUGE	12-CS-HC-0043

DESIGNED	CHECKED	DETAILED	CHECKED	SERIES NUMBER
MLR	GGM	MLR	GGM	

NO.	DATE	REVISION OR CHANGE ORDER DESCRIPTION	BY

GEOMETRIC LAYOUT & REFERENCE TIES

MALL OF LOUISIANA BOULEVARD

EVANS-GRAVES ENGINEERS

F:\00_PROJECTS\12-500\Sheet_Sets\Construction - Revised\P2 Sheet 063 Reference Ties.dgn 9/10/2020 08:32

Scale : 1" = 100'

TBM-JS2
60d NAIL IN 30" WALNUT TREE, EAST
OF CONC. ROAD AT NE CORNER OF MORRIS
C. PLOTTS COMPLEX
ELEV. 22.22

TBM - JS2

STA. 129+51.29 (MALL OF LA BLVD.) =
STA. 10+00.00 (BACKCOURT DRIVE)
N=685203.6393
E=3357987.4586

END SOUTHBOUND BASELINE
STA. 227+83.85 =
STA. 127+78.00, 19.00' LT.
NORTHBOUND BASELINE

STA. 343+00.00
BEGIN PICARDY AVE.
N=686221.110
E=3357870.922

S56°21'06.2"E

℄ PICARDY AVE.
CURVE DATA
Δ = 18°03'32.7" LT.
D = 11°07'31.4"
T = 81.84'
L = 162.32'
R = 515.00'

PC 345+73.49
N=686069.569
E=3358098.593

PT 347+35.82
N=686002.228
E=3358245.551

345+00

226+00

126+00

CONTROL PNT 3009

PT 226+43.42
N=684970.0594
E=3357777.1573

PC 129+90.15
N=685226.2147
E=3358005.4367

130+00

℄ MALL OF LA BLVD.
CURVE DATA
P.I. STA. 132+41.59
Δ = 5°00'00.0" LT
D = 0°57'24.6"
T = 261.44'
L = 522.55'
R = 5988.00'

135+00

PT 135+02.70
N=685648.6607
E=3358312.7253

CONTROL PNT 3004

S74°24'38.9"E

140+00

STA. 138+45.48 (MALL OF LA BLVD.) =
STA. 350+10.52 (PICARDY AVE.)
N=685928.4049
E=3358510.1490

350+00

END PROJECT BASELINE
STA. 144+99.60 (MALL OF LA BLVD.) =
N=686271.521
E=3359062.555

144+99.60

N38°31'56.2"E

N38°31'56.2"E

℄ S.B. MALL OF LA BLVD.
CURVE DATA
P.I. STA. 225+01.30
Δ = 12°34'41.2" RT.
D = 4°24'26.5"
T = 143.27'
L = 285.39'
R = 1300.00'

PT 126+90.47
N=684999.6092
E=3357824.9781

PC 10+90.14
N=685147.4872
E=3358057.9700

S51°28'03.8"E

℄ & PGL MALL OF LA BLVD.

N33°31'56.2"E

PC 137+17.53
N=685827.7333
E=3358431.3959

CONTROL PNT GPS 2

PT 141+28.26
N=686099.7258
E=3358733.3423

N62°26'34.2"E

℄ MALL OF LA BLVD.
CURVE DATA
P.I. STA. 139+27.37
Δ = 28°54'38.1" RT
D = 7°02'19.7"
T = 209.84'
L = 410.73'
R = 814.00'

℄ MALL OF LA BLVD.
CURVE DATA
P.I. STA. 122+50.76
Δ = 33°29'44.8" RT
D = 3°41'47.4"
T = 466.43'
L = 906.15'
R = 1550.00'

PT 14+01.85
N=684918.7387
E=3358267.8579

℄ BACKCOURT DRIVE

℄ BACKCOURT DRIVE
CURVE DATA
P.I. STA. 12+47.27
Δ = 17°51'34.7" RT
D = 5°43'46.5"
T = 157.13'
L = 311.71'
R = 1000.00'

S33°36'29.1"E

15+00

STA. 16+98.01
END ℄ BACKCOURT DRIVE
N=684672.0854
E=3358431.7841

GPS 1
EAST BOLT ON DOUBLE SIDE DRAIN
EAST OF EAST ENTANCE TO RAVE
CINEMA ON MALL OF LOUISIANA BLVD.
EAST BOUND SIDE, IN FRONT OF
DICKS SPORTING GOODS.
N=686587.1770
E=3359721.3510

TRAFFIC SIGNAL POLE
38.0'
CONTROL PNT GPS-1
TBM GPS-1 ELEV. 29.81
26.65'
66.30'
NORTH WEST CORNER OF SIGN
WEST BOLT ON SINGLE SIDE
DRAIN, SOUTH SIDE OF EAST
BOUND LANE OF MALL OF
LOUISIANA BLVD.
CONTROL PNT GPS-1

SOUTH BOLT ON SINGLE SIDE
DRAIN, NORTH SIDE OF EAST
BOUND LANE OF MALL OF
LOUISIANA BLVD.
56.75'
CONTROL PNT 3004
49.76'
70.92'
SET PK NAIL IN
6" CYPRESS TREE
BACK OF CURB AT
CORNER OF
PARKING LOT

CONTROL PNT. 3004
N = 685945.9760
E = 3358425.3278
1/2" IRON ROD

"A" ON "DRAIN" (OF MANHOLE)
EAST BOLT ON SINGLE SIDE
DRAIN, NORTH SIDE OF EAST
BOUND LANE OF MALL OF
LOUISIANA BLVD.
61.90'
57.10'
6.13'
CONTROL PNT GPS-2
WEST BOLT ON SINGLE SIDE
DRAIN, SOUTH SIDE OF EAST
BOUND LANE OF MALL OF
LOUISIANA BLVD.

GPS 2
1/2" IRON PIPE WEST OF SINGLE SIDE DRAIN,
NORTH OF GSU SUBSTATION, 334' WEST OF ℄
OF WEST DRIVEWAY TO RAVE THEATER, EAST
BOUND SIDE OF MALL OF LOUISIANA BLVD.
N=686064.7610
E=3358725.3060

SET PK NAIL IN
24" BLACK WALNUT TREE
132.70'
SET PK NAIL IN
24" HACKBERRY TREE
116.00'
33.73'
SET PK NAIL IN 24" TREE
CONTROL PNT 3009

CONTROL PNT. 3009
N = 685290.1705
E = 3357862.4823
1/2" IRON ROD

STATE OF LOUISIANA
GERALD G. MENARD
License No. 20437
PROFESSIONAL ENGINEER
IN
CIVIL ENGINEERING
9/10/2020

SHEET NUMBER	63
PARISH	EAST BATON ROUGE
CITY	BATON ROUGE
PROJECT	12-CS-HC-0043
DESIGNED / CHECKED	MLR / GGM
DETAILED / CHECKED	MLR / GGM
SERIES NUMBER	

NO.	DATE	REVISION OR CHANGE ORDER DESCRIPTION	BY

GEOMETRIC LAYOUT & REFERENCE TIES

MALL OF LOUISIANA BOULEVARD

EVANS-GRAVES ENGINEERS

F:\00_PROJECTS\12-500\Sheet_Sets\Construction - Revised\P2 Sheet 076 Multi Use Details.dgm 9/10/2020 08:32

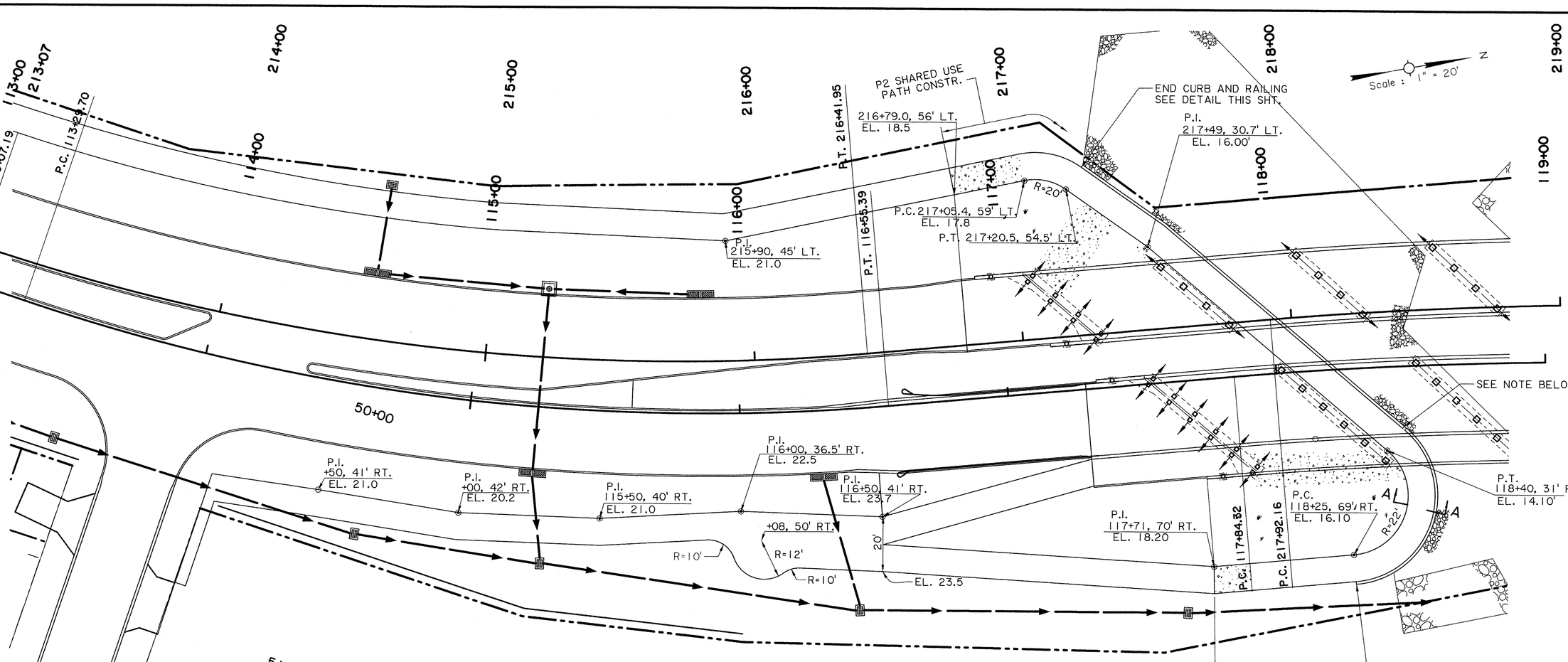

DETAILS OF SHARED USE PATH
(BETWEEN MAUREEN CONNOLLY AVE. AND DAWSON CREEK)

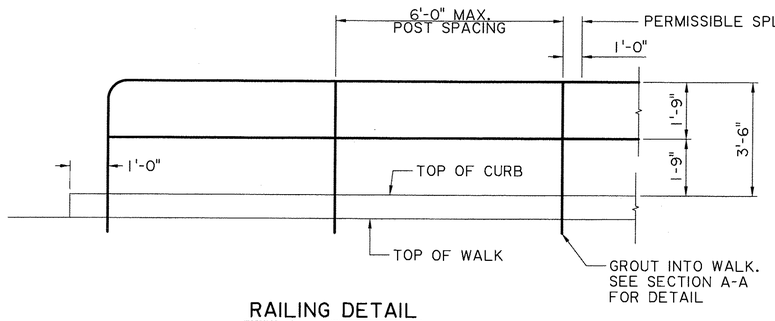

RAILING DETAIL
N.T.S.

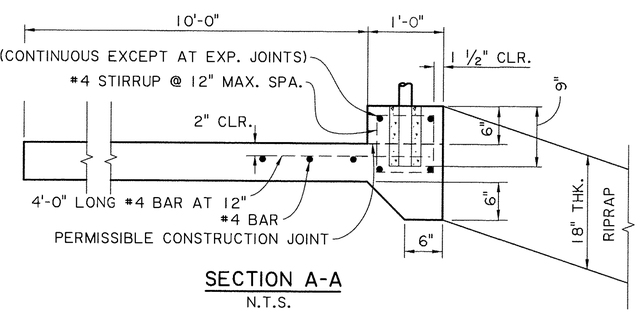

SECTION A-A
N.T.S.

NOTE:
PROVIDE A 2'-0" LONG OPENING IN CURB AT LOW POINT TO PROVIDE DRAINAGE.

RAILING NOTES:
1. PIPE FOR RAILING SHALL 1½" SCHEDULE 40.
2. PIPE JOINTS SHALL BE WELDED AND MAY BE MITERED OR BE MADE OF WELDED FITTINGS.
3. PIPE RAILING IN CURVES MAY BE BENT TO APPROPRIATE RADIUS OR MAY BE A SERIES OF TANGENTS NO LONGER THAN POST SPACING. PIPE RAILING SHALL ALSO BE FABRICATED TO FIT VERTICAL PROFILE OF CONCRETE PATH.
4. PIPE HANDRAIL SHALL BE GALVANIZED.

NOTE: #4 BARS IN TOP OF WALK REQUIRED ONLY ADJACENT TO CURB AND HANDRAIL. REINFORCING AND CURB COST SHALL BE INCLUDED IN BID FOR CONCRETE WALK.

STATE OF LOUISIANA
GERALD G. MENARD
License No. 20437
PROFESSIONAL ENGINEER
IN
CIVIL ENGINEERING
9/10/2020

SHEET NUMBER	76
PARISH	EAST BATON ROUGE
CITY	BATON ROUGE
PROJECT	12-CS-HC-0043
DESIGNED	PG
CHECKED	GGM
DETAILED	JNH
CHECKED	GGM
SERIES NUMBER	

REVISION OR CHANGE ORDER DESCRIPTION | NO. | DATE | BY

SHARED-USE PATH DETAILS

MALL OF LOUISIANA BOULEVARD

EVANS-GRAVES ENGINEERS

GENERAL NOTES(DAWSON CREEK BRIDGES)

CONSTRUCTION SPECIFICATIONS: CONSTRUCTION SHALL BE IN ACCORDANCE WITH THE 1997 STANDARD SPECIFICATION FOR PUBLIC WORKS CONSTRUCTION, CITY OF BATON ROUGE AND PARISH OF EAST BATON ROUGE, LOUISIANA, AS AMENDED BY THE PROJECT SPECIFICATIONS, EXCEPT AS NOTED. IN ADDITION, PORTIONS OF THE LOUISIANA STANDARD SPRCIFICATIONS FOR ROADS AND BRIDGES, 2016 EDITION, SHALL APPLY AS NOTED.

ELEVATIONS: ALL ELEVATIONS ARE BASED ON N.A.V.D. 88.

DIMENSIONS: ALL DIMENSIONS ARE GIVEN AT NORMAL TEMPERATURE (68°F). DIMENSIONS ARE BASED ON COLLECTED FIELD DATA AND/OR EXISTING AS-BUILT DRAWINGS. IT SHALL BE THE CONTRACTOR'S RESPONSIBILITY TO VERIFY ALL DIMENSIONS IN THE FIELD PRIOR TO THE INITIATION OF CONSTRUCTION AND THE FABRICATION OF AFFECTED COMPONENTS.

DESIGN SPEED: MALL OF LOUISIANA BOULEVARD: 40 MPH.

DESIGN SPECIFICATIONS: STRUCTURE DESIGN IS IN ACCORDANCE WITH THE AASHTO LRFD BRIDGE DESIGN SPECIFICATIONS, 7TH EDITION, WITH 2015 INTERIM REVISIONS. THE LOUISIANA DEPARTMENT OF TRANSPORTATION AND DEVELOPMENT BRIDGE DESIGN AND EVALUATION MANUAL, BRIDGE DESIGN ENGLISH MANUAL, LRFD BRIDGE DESIGN MANUAL, AND BRIDGE DESIGN TECHNICAL MEMORANDA 1 THROUGH 55 AS APPLICABLE. GEOMETRIC DESIGN IS IN ACCORDANCE WITH AASHTO POLICY ON GEOMETRIC DESIGN OF HIGHWAYS AND STREETS, 6TH EDITION.

DESIGN LOADING: DESIGN LIVE LOAD IS HL-93 AND LOUISIANA DESIGN VEHICLE 2011 (LADV-11). DESIGN FUTURE WEARING SURFACE IS 0.025 KSF.

ENVIRONMENTAL COMPLIANCE: PRIOR TO THE COMMENCEMENT OF ANY WORK, THE CONTRACTOR SHALL OBTAIN A COPY OF THE ENVIRONMENTAL CLEARANCE DOCUMENT AS WELL AS COPIES OF ALL PERMITS AND AGREEMENTS OBTAINED. THE CONTRACTOR SHALL THOROUGHLY EXAMINE AND COMPLY WITH ALL REQUIREMENTS SET FORTH IN THOSE DOCUMENTS.

MATERIALS: EXCEPT AS SPECIFICALLY STATED OTHERWISE IN THE CONTRACT DOCUMENTS, THE CONTRACTOR SHALL PROVIDE ALL MATERIALS NECESSARY FOR THE COMPLETION OF THE CONTRACT. ALL MATERIALS OF EVERY DESCRIPTION FURNISHED BY THE CONTRACTOR FOR PERMANENT INSTALLATION ON THE PROJECT, INCLUDING ALL MATERIALS AND EQUIPMENT THAT ARE TO BECOME THE PROPERTY OF EBR DEPARTMENT OF TRANSPORTATION & DRAINAGE UPON FINAL ACCEPTANCE OF THE PROJECT, SHALL BE NEW AND IN PRISTINE CONDITION WHEN INSTALLED AND/OR PROCURED FOR USE ON THE PROJECT. MATERIALS THAT ARE INSTALLED IN ACCORDANCE WITH THE AFOREMENTIONED BUT BECOME DAMAGED OR WORN BEYOND WHAT IS TO BE REASONABLY EXPECTED DURING THE DURATION OF THE PROJECT SHALL BE REPLACED WITH NEW IN-KIND MATERIALS AT THE SOLE DISCRETION OF THE ENGINEER.

CONCRETE: UNLESS NOTED OTHERWISE, ALL SUPERSTRUCTURE CONCRETE SHALL BE CLASS 6.5A4200 (DESIGN STRENGTH 4.2 KSI) AND ALL SUBSTRUCTURE CONCRETE TO BE CLASS 6A4000 (DESIGN STRENGTH 4 KSI). UNLESS NOTED OTHERWISE, CHAMFER ALL EXPOSED EDGES OF CONCRETE ¾" EXCEPT ALL CORNERS OF BENTS AND FOOTINGS WHICH SHALL BE CHAMFERED 1½". NO DEDUCTIONS ARE MADE IN CONCRETE QUANTITIES FOR CHAMFERS 1½" OR LESS.

CONCRETE RAILING: ALL CONCRETE AND REINFORCING STEEL IN CONCRETE RAILING SHALL BE PAID FOR PER LINEAR FOOT OF RAILING, INCLUDING BARS THAT PROJECT INTO THE RAILING FROM THE WINGWALL OR DECK. CONCRETE RAILING SHALL BE MEASURED FROM CENTERLINE TO CENTERLINE OF JOINTS. AFTER COMPLETING THE DECK POUR, A MINIMUM OF THREE DAYS SHALL ELAPSE OR THE DECK CONCRETE SHALL OBTAIN A MINIMUM STRENGTH OF 2 KSI PRIOR TO PLACEMENT OF REINFORCING STEEL OR FORMS FOR THE CONCRETE RAILING. THE DECK CONCRETE SHALL OBTAIN A MINIMUM COMPRESSIVE STRENGTH OF 4 KSI BEFORE POURING THE CONCRETE RAILING.

FINISH OF CONCRETE: ALL CONCRETE SURFACES SHALL BE FINISHED IN ACCORDANCE WITH SECTION 601 & CORRESPONDING SUBSECTIONS OF THE 1997 STANDARD SPECIFICATION FOR PUBLIC WORKS CONSTRUCTIONS, CITY OF BATON ROUGE.

CONSTRUCTION JOINT: WHERE CONSTRUCTION JOINTS ARE USED, NOT LESS THAN SEVEN DAYS SHALL HAVE ELAPSED BETWEEN ADJACENT POURS. VERTICAL CONCRETE SURFACES SHALL BE COATED PRIOR TO SUCCEEDING POURS IN ACCORDANCE WITH SECTION 805.05.8.2 OF THE LOUISIANA STANDARD SPECIFICATIONS FOR ROADS AND BRIDGES EXCEPT THAT THE EPOXY USED SHALL BE AN APPROVED TYPE V, GRADE 2 OR 3 EPOXY IN ACCORDANCE WITH ASTM C881. EPOXY SHALL BE APPLIED IN ACCORDANCE WITH THE MANUFACTURER'S RECOMMENDATIONS. COST SHALL BE INCLUDED IN PRICE BID FOR ASSOCIATED CONCRETE AS APPROPRIATE. WHEN SITE CONDITIONS MAKE THE PLACEMENT OF EPOXY IN ACCORDANCE WITH THE MANUFACTURER'S RECOMMENDATIONS UNFEASIBLE, THE ENGINEER, AT HIS SOLE DISCRETION, MAY ALLOW THE CONTRACTOR TO INTENTIONALLY ROUGHEN THE ENTIRE SURFACE TO AN AMPLITUDE OF AT LEAST ½" AND PROVIDE A SATURATED SURFACE DRY (SSD) CONDITION JUST PRIOR TO THE POUR IN LIEU OF APPLYING EPOXY TO THE SURFACE.

REINFORCING STEEL: REINFORCING STEEL SHALL BE GRADE 60 STEEL. THE FIRST DIGIT(S) OF THE REINFORCING BAR NUMBER INDICATES BAR SIZE. UNLESS NOTED OTHERWISE, DIMENSIONS RELATING TO REINFORCING STEEL FABRICATION ARE OUT-TO-OUT OF BARS AND DIMENSIONS RELATED TO REINFORCING STEEL SPACING ARE CENTER-TO-CENTER OF BARS. THE MINIMUM COVERING FROM THE SURFACE OF THE CONCRETE TO THE FACE OF ANY DEFORMED REINFORCING BAR SHALL NOT BE LESS THAN THE FOLLOWING:

TOP OF SLAB	2½"
BOTTOM OF SLAB	1½"

ALL OTHER SUPERSTRUCTURE REINFORCING STEEL COVER SHALL BE 2" AND SUBSTRUCTURE COVER SHALL BE 3" UNLESS NOTED OTHERWISE IN THE PLANS. SEE LADOTD STANDARD PLANS S.W.B.S. 100 FOR BAR SUPPORT DETAILS.

PRECAST-PRESTRESSED GIRDER SPAN ERECTION: THE CONTRACTOR SHALL BE RESPONSIBLE FOR THE STABILITY OF THE PRECAST-PRESTRESSED CONCRETE GIRDERS DURING FABRICATION, TRANSPORTATION, ERECTION, AND DECK PLACEMENT. THE GIRDERS SHALL BE MAINTAINED IN AN UPRIGHT POSITION AT ALL TIMES AND MUST BE SUPPORTED NO MORE THAN 3'-0" FROM THE GIRDER ENDS. PICK-UP POINTS, HOLD-DOWN METHODS FOR DRAPED STRANDS, AND RELEASE SEQUENCES AND SCHEDULES SHALL BE INDICATED ON THE SHOP DRAWINGS AS APPROPRIATE AND SUBMITTED TO THE PROJECT ENGINEER FOR REVIEW. ANY INHERENT STABILITY PROVIDED BY PLAN REQUIRED DIAPHRAGMS SHALL NOT BE CONSIDERED BY THE CONTRACTOR WHEN DESIGNING THE REQUIRED CONSTRUCTION BRACING. THE DIAPHRAGMS ARE PROVIDED TO RESTRAIN THE LATERAL MOVEMENT OF THE GIRDERS WHEN THE BRIDGE IS IN ITS FINAL SERVICE CONDITION AND ARE NOT INTENDED OR ALLOWED FOR USE AS CONSTRUCTION STABILITY BRACING. DETAILED ERECTION DRAWINGS OUTLINING COMPLETE CONSTRUCTION PROCEDURES ALONG WITH THE EQUIPMENT TO BE USED FOR ERECTION SHALL BE SUBMITTED TO THE PROJECT ENGINEER FOR REVIEW AND APPROVAL.

STRUCTURAL METALWORK: EXCEPT AS NOTED BELOW, ALL STEEL SHALL BE STRUCTURAL CARBON STEEL CONFORMING TO ASTM A709 (GR 36). ANY NECESSARY MATERIAL SUBSTITUTIONS SHALL REQUIRE PRIOR APPROVAL FROM THE BRIDGE DESIGN ENGINEER. METALWORK TO BE PAID FOR UNDER ITEM NO. 6020600, STRUCTURAL STEEL, PER LUMP SUM.

GALVANIZED STEEL: ALL MISCELLANEOUS HARDWARE THAT IS SPECIFIED TO BE HOT DIP GALVANIZED SHALL BE COATED IN ACCORDANCE WITH ASTM A153. ALL MISCELLANEOUS HARDWARE THAT IS SPECIFIED TO BE MECHANICALLY GALVANIZED SHALL BE COATED IN ACCORDANCE WITH ASTM B695. ALL STRUCTURAL STEEL SHAPES THAT ARE SPECIFIED TO BE GALVANIZED SHALL BE COATED IN ACCORDANCE WITH ASTM A123 AFTER FABRICATION. DAMAGED GALVANIZED COATS THAT ARE NOT TO BE EMBEDDED IN MORE THAN THREE INCHES OF CONCRETE SHALL BE REPAIRED WITH AN APPROVED COLD-APPLIED, ZINC-RICH, ORGANIC PAINT AS SPECIFIED IN SECTION 1021, OR ANY OTHER REPAIR METHOD APPROVED BY THE ENGINEER.

PILE IDENTIFICATION: ALL PILES SHALL BE IDENTIFIED USING THE FOLLOWING DESIGNATION FORMAT:

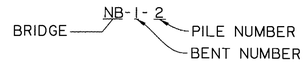

THE BENT NUMBER SHALL BE THE NUMERICAL DESIGNATION OF EACH BENT AS SHOWN ON THE GENERAL PLAN. THE PILE NUMBER SHALL BE THE DESIGNATION BASED ON PILE LOCATION REFERENCED ON THE BENT DETAILS.

DETERMINATION OF PILE BEARING CAPACITY: THE PILE BEARING CAPACITY DETERMINATION SHALL BE MADE BY USE OF THE WAVE EQUATION IN ACCORDANCE WITH THE LOUISIANA STANDARD SPECIFICATIONS FOR ROADS AND BRIDGES, 2016 EDITION.

GEOTECHNICAL REPORT: SEE GEOTECHNICAL REPORT PREPARED BY GEOENGINEERS, DATED 7/11/2014 FOR FOUNDATION DESIGN AND INSTALLATION PARAMETERS, LABORATORY DATA AND SOIL CHARACTERISTICS.

VIBRATION MONITORING: DUE TO PROXIMITY TO RESIDENTIAL STRUCTURES, VIBRATION MONITORING IS REQUIRED DURING PILE DRIVING OPERATIONS. THE VIBRATION MONITORING SHALL BE IN COMPLIANCE WITH THE SPECIAL PROVISION AND PAYMENT SHALL BE UNDER ITEM 9900003.

MONITOR PILES: DESIGNATED PILES DRIVEN AT EACH BRIDGE SHALL BE MONITORED WITH THE PILE DRIVING ANALYZER (PDA) TO ASSESS PILE INTEGRITY. AT THE DIRECTION OF THE ENGINEER, A ONE DAY RESTRIKE MAY BE REQUIRED. ADDITIONAL MONITOR PILES REQUIRED BY THE PLANS OR BY THE ENGINEER SHALL HAVE A ONE DAY RESTRIKE BUT SHALL NOT REQUIRE INITIAL DRIVE MONITORING UNLESS DIRECTED OTHERWISE BY THE ENGINEER.

DYNAMIC MONITORING: PILE DRIVING ANALYZER (PDA) MONITORING WILL BE REQUIRED AT EACH MONITOR PILE, AND AS DIRECTED BY THE ENGINEER. ALL COSTS AND DELAYS ASSOCIATED WITH PDA MONITORING SHALL BE IN ACCORDANCE WITH THE SPECIAL PROVISION AND SHALL BE PAID UNDER ITEM NO. 9900001, DYNAMIC MONITORING.

PILE DRIVING EQUIPMENT APPROVAL: ALL PILE DRIVING EQUIPMENT SHALL BE APPROVED USING THE WAVE EQUATION HAMMER APPROVAL METHOD IN ACCORDANCE WITH THE LOUISIANA STANDARD SPECIFICATIONS FOR ROADS AND BRIDGES.

REQUIRED PILE RESISTANCE: REQUIRED PILE RESISTANCE "WITHOUT PREBORING" SHALL BE USED TO VERIFY PILE BEARING CAPACITY IF NO PREBORING IS PERFORMED. IF PREBORING TO THE SCOUR ELEVATION IS PERFORMED, THE REQUIRED PILE RESISTANCE "WITH PREBORING" SHALL BE USED FOR PILE CAPACITY VERIFICATION.

PREBORING AND/OR JETTING: PREBORING AND/OR JETTING MAY BE NECESSARY TO FACILITATE PILE INSTALLATION. PREAPPROVAL FROM THE ENGINEER AND THE GEOTECHINCAL ENGINEER IS REQUIRED PRIOR TO ANY PREBORING AND/OR JETTING OPERATION. ALL PREBORING AND/OR JETTING SHALL BE IN ACCORDANCE WITH THE LA DOTD STANDARD SPECIFICATIONS, AS APPROPRIATE.

GUARD RAIL: FOR ADDITIONAL GUARD RAIL DETAILS AND INFORMATION, SEE THE BRIDGE GENERAL PLAN AND STANDARD PLANS GR-200 AND GR-201

YEAR PLATE: THE DATE OF CONSTRUCTION IS REQUIRED ON THE RIGHT WINGWALL OF BRIDGES FOR ONCOMING LANES, SEE SPECIAL DETAIL 601-04 FOR ADDITIONAL YEAR PLATE DETAIL INFORMATION

BRIDGE INDEX OF SHEETS (DAWSON CREEK BRIDGES)

SHEET NO.	DESCRIPTION
201	BRIDGE INDEX & BRIDGE GENERAL NOTES
202	SUMMARY OF ESTIMATED BRIDGE QUANTITIES
203-204	GENERAL PLAN & ELEVATION MALL OF LA BOULEVARD BRIDGE
205	GRADING, RIPRAP, SOD, AND CONC. REVETMENT
206	FOUNDATION PLAN
207-208	PILE DATA TABLE
209-220	BENT DETAILS
221	FRAMING PLAN
222-223	GIRDER DETAILS & SCHEDULE
224-229	SPAN DETAILS
230-233	APPROACH SLAB
270	BRIDGE RAILING DETAILS
280-284	MISCELLANEOUS SPAN AND GIRDER DETAILS
285-286	STRIP SEAL JOINTS DETAILS (4")
287	UNDERDRAINS FOR CONCRETE APPROACH SLABS (ASD-SA)
288	LIGHT SUPPORT BLISTER DETAILS

INCLUDED LDOTD STANDARD PLANS (SEE INDEX)

GR-200
BR-01
SWBS-100

ANCHOR BOLTS: UNLESS NOTED OTHERWISE, ALL ANCHOR BOLTS SHALL BE ASTM F1554 (GR 36), AND ALL NUTS AND WASHERS FOR ANCHOR BOLTS SHALL BE ASTM A563 GRADE A AND ASTM F436 TYPE 1, RESPECTIVELY, ANCHOR BOLTS SHALL EITHER BE CAST-IN-PLACE OR SET IN A PREFORMED HOLE WITH A NON-SHRINK GROUT FROM APPROVED MATERIAL LIST MATERIAL: 1018MO0850, NON-SHRINK GROUT. GROUT SHALL HAVE A COMPRESSIVE STRENGTH EQUAL TO OR GREATER THAN THAT OF THE SURROUNDING CONCRETE AND SHALL BE INSTALLED IN ACCORDANCE WITH THE MANUFACTURER'S RECOMMENDATIONS. ANCHOR BOLTS, NUTS, AND WASHERS SHALL BE HOT DIP GALVANIZED.

WELDING: ALL WELDING SHALL CONFORM TO SECTION 602-15 WELDING. ALL WELDING IS DEFINED AS ANY WELD THAT IS PLACED FROM THE INITIATION OF FABRICATION THROUGH FINAL PROJECT ACCEPTANCE, INCLUDING FABRICATION, TRANSPORTATION, ERECTION, AND CONSTRUCTION. ALL WELDS SHALL BE CONTINUOUS. UNLESS NOTED OTHERWISE, ALL GROOVE WELDS SHALL BE COMPLETE PENETRATION WELDS.

SHOP/OTHER WELDING: ALL WELDS TO BE MADE SHALL ONLY BE AS SHOWN IN THE SHOP DRAWINGS AND ARE SUBJECT TO REVIEW AND APPROVAL BY THE PROJECT ENGINEER. PLACEMENT OF ANY WELDS NOT EXPLICITLY SHOWN ON THE SHOP DRAWINGS IS STRICTLY PROHIBITED AND SHALL BE CAUSE FOR THE REJECTION OF THE ENTIRE MEMBER ON WHICH THE WELD WAS MADE.

FIELD WELDING: EXCEPT AS SPECIFICALLY PERMITTED IN THE PLANS, FIELD WELDING (INCLUDING TACK WELDING) OF ANY MEMBERS (PRIMARY OR OTHERWISE) IS STRICTLY PROHIBITED. PLACEMENT OF ANY FIELD WELDS NOT EXPLICITLY SHOWN IN THE PLANS SHALL BE CAUSE FOR REJECTION OF THE ENTIRE MEMBER ON WHICH THE WELD WAS MADE. ALL MEMBERS SHALL BE SHIELDED FROM WELD SPATTER AND ARC STRIKES DURING ANY OTHER ALLOWED FIELD WELDING.

GALVANIZED STAY-IN-PLACE STEEL FORMS: THE CONTRACTOR WILL BE ALLOWED TO USE GALVANIZED STAY-IN-PLACE STEEL FORMS IN ACCORDANCE WITH ARTICLE 805.09(G) OF THE LOUISIANA STANDARD SPECIFICATIONS FOR ROADS AND BRIDGES. WHEN USED, ANY ADDITIONAL WEIGHT OR THICKNESS ADDED TO THE DECK DUE TO THE USE OF THESE FORMS SHALL BE NEGLIGIBLE. LIGHTWEIGHT BLOCKOUTS SHALL BE USED TO PREVENT CONCRETE FROM FILLING THE CORRUGATIONS IN THE FORMS DURING THE PLACEMENT OF THE DECK. WELDING FORMS OR SUPPORT ANGLES TO STRUCTURAL STEEL MEMBERS IS STRICTLY PROHIBITED.

STATE OF LOUISIANA
GERALD G. MENARD
License No. 20437
PROFESSIONAL ENGINEER
IN
CIVIL ENGINEERING
7/10/2020

SHEET NUMBER 201

PARISH	CITY	PROJECT
EAST BATON ROUGE	BATON ROUGE	12-CS-HC-0043

DESIGNED	CHECKED	DETAILED	CHECKED	DATE	SHEET
PG	GGM	SJA	GGM		

NO.	DATE	REVISION OR CHANGE ORDER DESCRIPTION	BY

BRIDGE INDEX & BRIDGE GENERAL NOTES
DAWSON CREEK BRIDGES
MALL OF LOUISIANA BOULEVARD

EVANS-GRAVES ENGINEERS

9/10/2020 14:32
F:\00_PROJECTS\12-500\Sheet_Sets\Construction - Revised\P2 Sheet 201 General Notes.dgn

SUMMARY OF ESTIMATED BRIDGE QUANTITIES

LOCATION	2030400 CHANNEL EXCAVATION (CU. YD.)	2031000 CHANNEL BACKFILL (CU. YD.)		6010100 CLASS 6A4000 CONCRETE (CU. YD.)	6010300 CLASS 6.5A4200 CONCRETE (CU. YD.)	6010500 REINFORCING STEEL (POUND)	6010600 BRIDGE APPROACH SLAB (SQ. YD.)	6010802 TYPE II PRESTRESSED CONCRETE GIRDERS (8.5 KSI) (LIN. FT.)		6010900 CONCRETE BRIDGE RAILING (32") (LIN. FT.)	6010903 CONCRETE / METAL BRIDGE RAILING (LIN. FT.)	6020600 STRUCTURAL STEEL (LUMP)	6050116 16" PRECAST CONCRETE PILES (LIN. FT.)	6050124 24" PRECAST CONCRETE PILES (LIN. FT.)			7040504 4" CAST-IN-PLACE CONCRETE REVETMENT (SQ. YD.)	7050302 30-LB RIPRAP (TON)	7050304 130-LB RIPRAP (TON)	9900001 DYNAMIC MONITORING (EACH)	9900002 STRIP SEAL JOINTS (LIN. FT.)	9900003 VIBRATION MONITORING (EACH)	9900005 LIGHT SUPPORT BLISTER (EACH)
NB MALL OF LA	3,470	2,820		239.02	393.01	160,873	343.9	2,058.3		810.6	377.9	LUMP	1,464	3,204			578.7	2,116	251	3	159.0	64	2
SB MALL OF LA				164.91	282.64	115,821	202.7	1,393.7		775.4		LUMP	1,016	2,328						3	109.8	44	2
TOTAL	3,470	2,820		403.93	675.65	276,694	546.6	3,452.0		1,586.0	377.9	LUMP	2,480	5,532			578.7	2,116	251	6	268.8	108	4

GERALD G. MENARD
License No. 20437
PROFESSIONAL ENGINEER
IN
CIVIL ENGINEERING
9/10/2020

SHEET NUMBER 202

PARISH: EAST BATON ROUGE
CITY: BATON ROUGE
PROJECT: 12-CS-HC-0043

DESIGNED PG
CHECKED GGM
DETAILED SJA
CHECKED GGM
DATE
SHEET

REVISION OR CHANGE ORDER DESCRIPTION | BY | NO. | DATE

SUMMARY OF ESTIMATED BRIDGE QUATITIES
(DAWSON CREEK BRIDGES)

MALL OF LOUISIANA BOULEVARD

EVANS-GRAVES ENGINEERS

F:\00_PROJECTS\12-500\Sheet_Sets\Construction - Revised\P2 Sheet 202 BridgeQuantities.dgn 9/10/2020 14:32

F:\00_PROJECTS\12-500\Sheet_Sets\Construction - Revised\P2 Sheet 203 GPB Picardy.dgn 9/10/2020 14:32

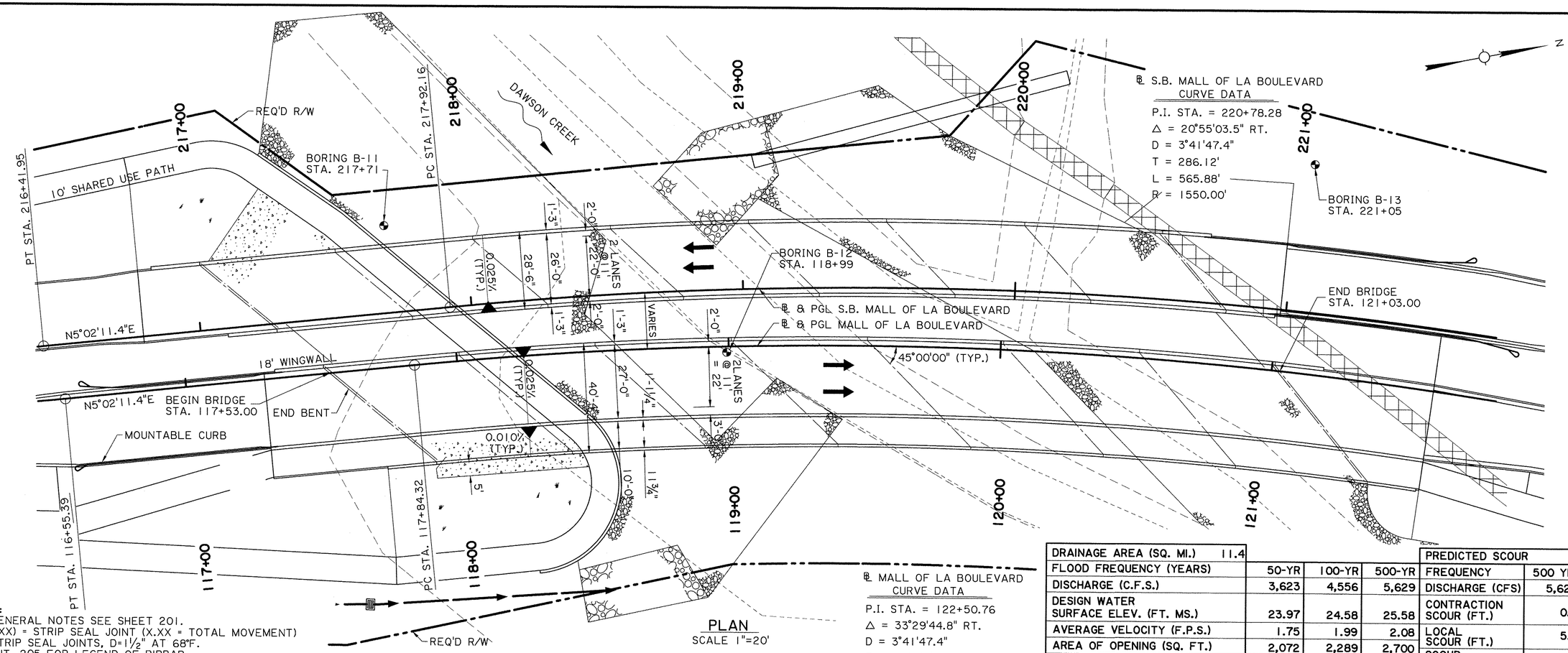

NOTES:
FOR GENERAL NOTES SEE SHEET 201.
S.S.(X.XX) = STRIP SEAL JOINT (X.XX = TOTAL MOVEMENT)
ALL STRIP SEAL JOINTS, D=1½" AT 68°F.
SEE SHT. 205 FOR LEGEND OF RIPRAP AND REVETMENT.

DRAINAGE AREA (SQ. MI.) 11.4				PREDICTED SCOUR	
FLOOD FREQUENCY (YEARS)	50-YR	100-YR	500-YR	FREQUENCY	500 YR.
DISCHARGE (C.F.S.)	3,623	4,556	5,629	DISCHARGE (CFS)	5,629
DESIGN WATER SURFACE ELEV. (FT. MS.)	23.97	24.58	25.58	CONTRACTION SCOUR (FT.)	0.9
AVERAGE VELOCITY (F.P.S.)	1.75	1.99	2.08	LOCAL SCOUR (FT.)	5.2
AREA OF OPENING (SQ. FT.)	2,072	2,289	2,700	SCOUR ELEVATION (FT.)	-2.3
BACKWATER (FT.)	0.02	0.03	0.03		

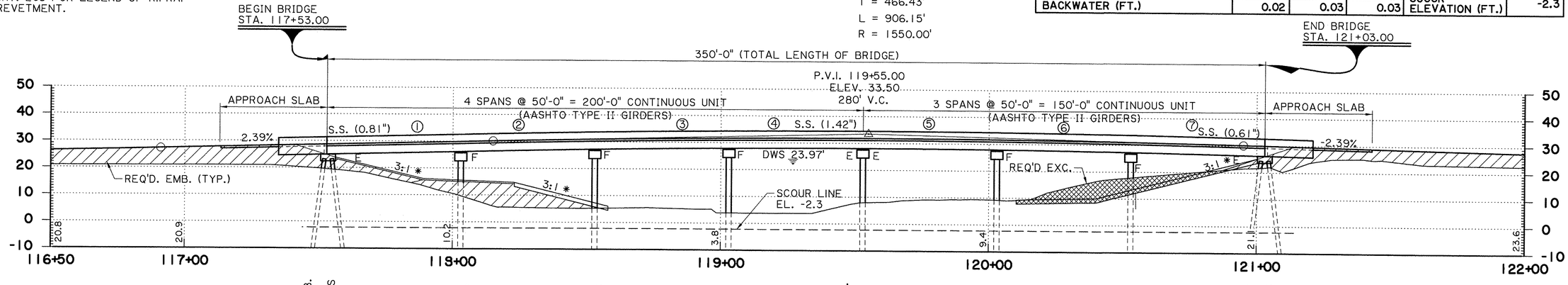

℄ JT. @ BENT 1 N.B.
STA. 117+53.00
12-16" Ø P.P.C. PILES
PGL ELEV. 28.67

℄ BENT 2 N.B.
STA. 118+03.00
6-24" Ø P.P.C. PILES
PGL ELEV. 29.87

℄ BENT 3 N.B.
STA. 118+53.00
6-24" Ø P.P.C. PILES
PGL ELEV. 30.94

℄ BENT 4 N.B.
STA. 119+03.00
6-24" Ø P.P.C. PILES
PGL ELEV. 31.60

℄ JT. & BENT 5 N.B.
STA. 119+53.00
6-24" Ø P.P.C. PILES
PGL ELEV. 31.82

℄ BENT 6 N.B.
STA. 120+03.00
6-24" Ø P.P.C. PILES
PGL ELEV. 31.63

℄ BENT 7 N.B.
STA. 120+53.00
6-24" Ø P.P.C. PILES
PGL ELEV. 31.01

℄ JT. @ BENT 8 N.B.
STA. 121+03.00
12-16" Ø P.P.C. PILES
PGL ELEV. 29.96

* 3:1 SLOPE MEASURED PERPENDICULAR TO END BENT.

NORTH BOUND ELEVATION
(TAKEN ALONG PROFILE GRADE)
SCALE 1"=20'

STATE OF LOUISIANA
GERALD G. MENARD
License No. 20457
PROFESSIONAL ENGINEER
IN
CIVIL ENGINEERING
9/10/2020

SHEET NUMBER 203
PARISH EAST BATON ROUGE
CITY BATON ROUGE
PROJECT 12-CS-HC-0043
DESIGNED PG
CHECKED GGM
DETAILED SA
CHECKED GGM
DATE
SHEET
NO. DATE BY REVISION OR CHANGE ORDER DESCRIPTION

GENERAL PLAN & ELEVATION
NORTH BOUND BRIDGE
MALL OF LA BOULEVARD BRIDGE
MALL OF LOUISIANA BOULEVARD

CITY OF BATON ROUGE PARISH OF EAST BATON ROUGE

EVANS-GRAVES ENGINEERS

F:\00_PROJECTS\12-500\Sheet_Sets\Construction - Revised\P2 Sheet 204 GPE Picardy02.dgn 9/10/2020 09:02

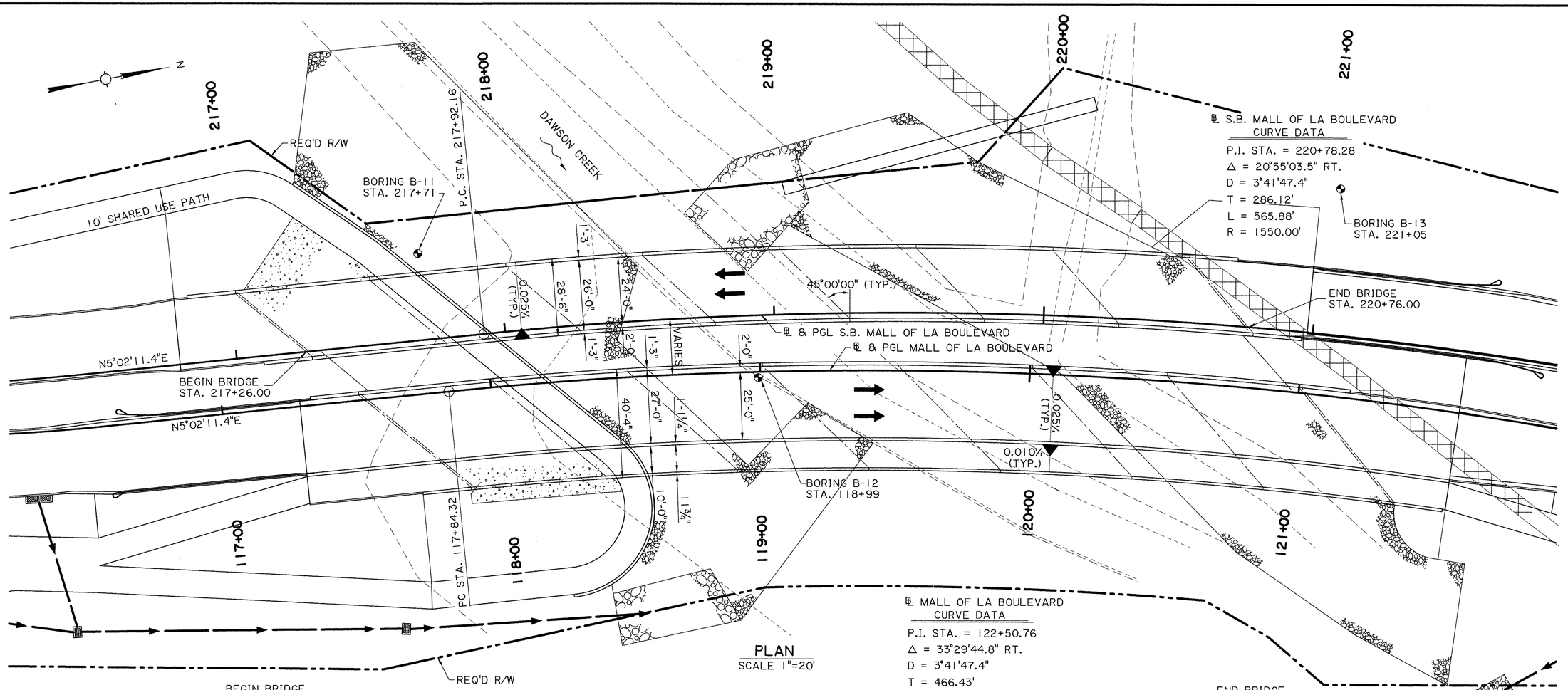

PLAN
SCALE 1"=20'

NOTES:
FOR NOTES AND HYDRAULIC TABLE
SEE SHEET 203

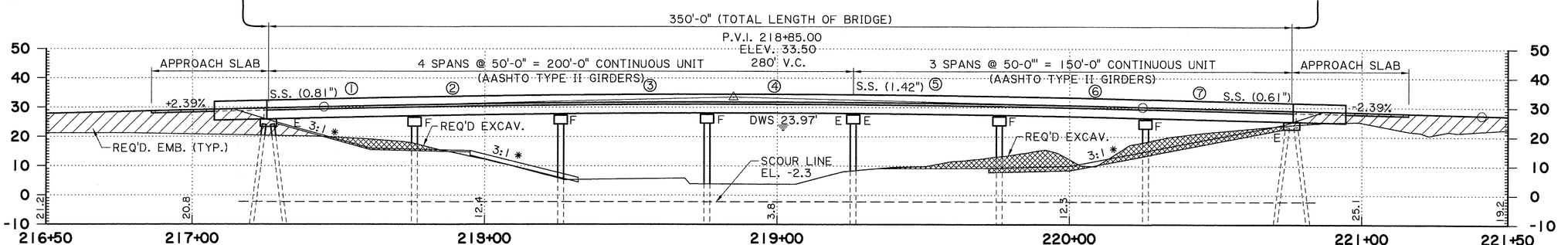

℄ JT. @ BENT 1 S.B.
STA. 217+26.00
8-16" Ø P.P.C. PILES
PGL ELEV. 29.70

℄ BENT 2 S.B.
STA. 217+76.00
4-24" Ø P.P.C. PILES
PGL ELEV. 30.81

℄ BENT 3 S.B.
STA. 218+26.00
4-24" Ø P.P.C. PILES
PGL ELEV. 31.53

℄ BENT 4 S.B.
STA. 218+76.00
4-24" Ø P.P.C. PILES
PGL ELEV. 31.82

℄ JT. & BENT 5 S.B.
STA. 219+26.00
4-24" Ø P.P.C. PILES
PGL ELEV. 31.68

℄ BENT 6 S.B.
STA. 219+76.00
4-24" Ø P.P.C. PILES
PGL ELEV. 31.12

℄ BENT 7 S.B.
STA. 220+26.00
4-24" Ø P.P.C. PILES
PGL ELEV. 30.13

℄ JT. @ BENT 8 S.B.
STA. 220+76.00
8-16" Ø P.P.C. PILES
PGL ELEV. 28.93

* SLOPE MEASURED PERPENDICULAR
TO ABUTMENT.

SOUTH BOUND ELEVATION
(TAKEN ALONG PROFILE GRADE)
SCALE 1"=20'

STATE OF LOUISIANA
GERALD G. MENARD
License No. 20437
PROFESSIONAL ENGINEER
IN
CIVIL ENGINEERING
9/10/2020

EVANS-GRAVES ENGINEERS

SHEET NUMBER 204

PARISH EAST BATON ROUGE
CITY BATON ROUGE
PROJECT 12-CS-HC-0043

DESIGNED PG
CHECKED GGM
DETAILED SA
CHECKED GGM
DATE
SHEET

NO.	DATE	REVISION OR CHANGE ORDER DESCRIPTION	BY

GENERAL PLAN & ELEVATION
SOUTH BOUND
PAULAT BOULEVARD BRIDGE
MALL OF LOUISIANA BOULEVARD

CITY OF BATON ROUGE PARISH OF EAST BATON ROUGE

9/10/2020 09:02
F:\00_PROJECTS\12-500\Sheet_Sets\Construction - Revised\P2 sheet 205 grading.dgn

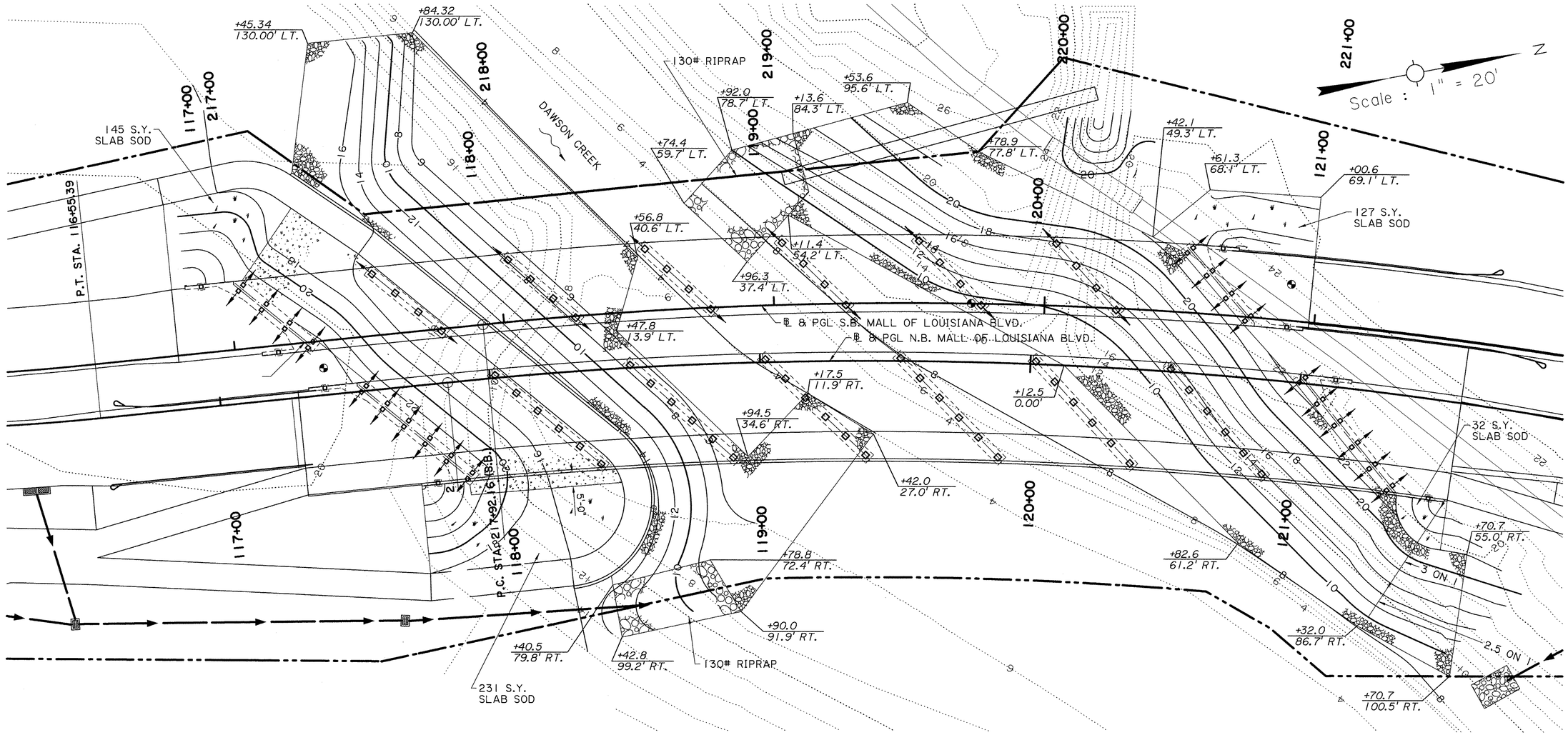

LEGEND:

- EXISTING CONTOUR
- FINAL PROPOSED CONTOUR
- 30# RIPRAP (1.5' THICK)
- 130# RIPRAP (2.5' THICK)
- SLAB SOD
- 4" THK. CONC. REVETMENT

NOTES:

1. WHERE RIPRAP OR REVETMENT IS SHOWN, CONTOURS ARE DENOTING TOP OF CONCRETE OR TOP OF RIPRAP.
2. STA./OFFSET CALLOUTS TO RIPRAP ARE FROM ℄ AND PGL OF N.B. MALL OF LA BLVD.
3. TOE WALLS ARE ARE NOT REQUIRED AT EDGES OF RIPRAP.
4. GEOTEXTILE FABRIC SHALL BE PLACED UNDER ALL RIPRAP.

CHANNEL GRADING
(SOUTH CREEK BANK)
EXC.= 2,030 CY
EMB.= 2,114 CY

CHANNEL GRADING
(NORTH CREEK BANK)
EXC.= 1,447 CY
EMB.= 705 CY

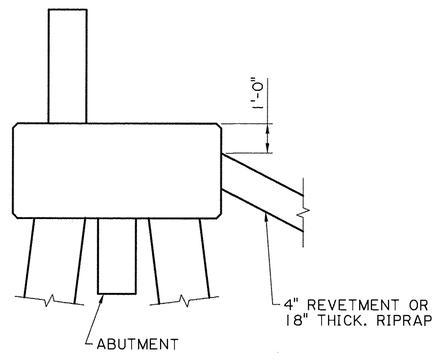

RIPRAP & REVETMENT LOCATION DETAIL
N.T.S.

GERALD G. MENARD
License No. 20437
PROFESSIONAL ENGINEER
IN
CIVIL ENGINEERING
STATE OF LOUISIANA
9/10/2020

SHEET NUMBER 205

PARISH EAST BATON ROUGE
CITY BATON ROUGE
PROJECT 12-CS-HC-0043

DESIGNED PG
CHECKED GGM
DETAILED MLR
CHECKED GGM
DATE
SHEET

REVISION OR CHANGE ORDER DESCRIPTION | BY | DATE | NO.

DAWSON CREEK
GRADING, RIPRAP, SOD, AND
CONCRETE REVETMENT

MALL OF LOUISIANA BOULEVARD

EVANS-GRAVES ENGINEERS

F:\00_PROJECTS\12-500\Sheet_Sets\Construction - Revised\P2 Sheet 206 Foundation Layout Picardy.dgn 9/10/2020 09:02

℄ S.B. MALL OF LA BOULEVARD
CURVE DATA

P.I. STA. = 220+78.28
Δ = 20°55'03.5" RT.
D = 3°41'47.4"
T = 286.12'
L = 565.88'
R = 1550.00'

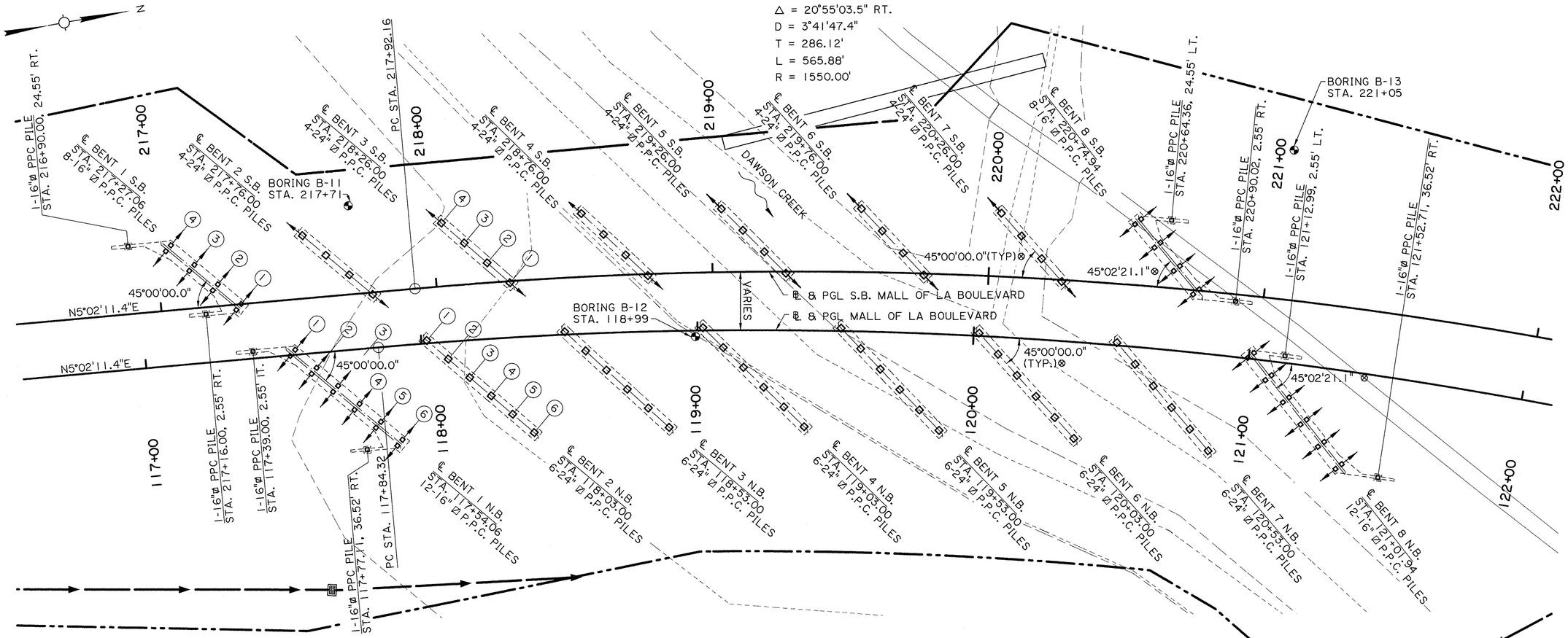

FOUNDATION PLAN
SCALE: 1"=20'

℄ MALL OF LA BOULEVARD
CURVE DATA

P.I. STA. = 122+50.75
Δ = 33°29'44.8" RT.
D = 3°41'47.4"
T = 466.43'
L = 906.15'
R = 1550.00'

LEGEND

- BORING
- BATTER PILES 1 1/2 IN 12 (IN DIRECTION OF ARROWS)
- ⊗ MEASURED TO LOCAL TANGENT

NOTES:

1. ROUGH GRADE CREEK TO WITHIN 1 FOOT OF FINAL BOTTOM OF RIPRAP SHOWN ON GRADING PLAN PRIOR TO DRIVING PILES.

STATE OF LOUISIANA
GERALD G. MENARD
License No. 20437
PROFESSIONAL ENGINEER
IN
CIVIL ENGINEERING
9/10/2020

SHEET NUMBER 206
PARISH EAST BATON ROUGE
CITY BATON ROUGE
PROJECT 12-CS-HC-0043
DESIGNED PG CHECKED GGM
DETAILED MLR CHECKED GGM
DATE
SHEET
NO. DATE REVISION OR CHANGE ORDER DESCRIPTION BY

FOUNDATION PLAN
NORTHBOUND & SOUTHBOUND
MALL OF LA BOULEVARD BRIDGE
MALL OF LOUISIANA BOULEVARD

CITY OF BATON ROUGE PARISH OF EBR

EVANS-GRAVES ENGINEERS

PRODUCTION PILE DATA TABLE (N.B. MALL OF LA BLVD BRIDGE)

BENT NO.	STATION	NO. OF PILES PER BENT	PILE TYPE & SIZE	MONITOR PILE REQUIRED (Y OR N)	LOAD (TONS)				SOIL RESISTANCE FACTOR (ø)			REQUIRED NOMINAL RESISTANCE (TONS)		MAX CUTOFF EL (ft.)	PLAN LENGTH (ft.)	PLAN TIP EL (ft.)	ORDER LENGTH (ft.)	AS-BUILT TIP EL (ft.)		
					SERVICE		STRENGTH		SERVICE	STRENGTH		WITHOUT PREBORING	PREBORING TO SCOUR DEPTH					MAX.	MIN.	AVG.
					PERMANENT LOAD	TRANSIENT LOAD	COMPRESSION	TENSION		COMPRESSION	TENSION									
END BENT 1	117+53.75	12	16" ø P.P.C.	N	24	26	68	-	-	0.65	-	151	105	22.53	56	-33.47				
1	117+39.00	1	16" ø P.P.C.	N	NA	NA	NA			NA		NA	NA		30					
1	117+77.11	1	16" ø P.P.C.	N	NA	NA	NA			NA		NA	NA		30					
2	118+03.00	6	24" ø P.P.C.	Y	52	67	164			0.65		289	252	23.44	89	-65.56				
3	118+53.00	6	24" ø P.P.C.	N	52	67	164			0.65		272	252	24.44	89	-64.56				
4	119+03.00	6	24" ø P.P.C.	Y	52	67	164			0.65		270	252	25.11	89	-63.89				
5	119+53.00	6	24" ø P.P.C.	N	52	67	164			0.65		283	252	25.35	89	-63.65				
6	120+03.00	6	24" ø P.P.C.	N	52	67	164			0.65		288	252	25.14	89	-63.86				
7	120+53.00	6	24" ø P.P.C.	Y	52	67	164			0.65		296	252	24.50	89	-64.50				
END BENT 8	121+02.25	12	16" ø P.P.C.	N	24	26	68			0.65		155	105	23.80	56	-32.20				
8	121+13.69	1	16" ø P.P.C.	N	NA	NA	NA			NA		NA	NA		30					
8	121+53.43	1	16" ø P.P.C.	N	NA	NA	NA			NA		NA	NA		30					

PILE #			1			2			3			4			5			6		
BENT #	STATION	PILE TYPE	PILE CUT-OFF ELEVATION	ESTIMATED PILE TIP ELEVATION	PILE LENGTH (FT.)	PILE CUT-OFF ELEVATION	ESTIMATED PILE TIP ELEVATION	PILE LENGTH (FT.)	PILE CUT-OFF ELEVATION	ESTIMATED PILE TIP ELEVATION	PILE LENGTH (FT.)	PILE CUT-OFF ELEVATION	ESTIMATED PILE TIP ELEVATION	PILE LENGTH (FT.)	PILE CUT-OFF ELEVATION	ESTIMATED PILE TIP ELEVATION	PILE LENGTH (FT.)	PILE CUT-OFF ELEVATION	ESTIMATED PILE TIP ELEVATION	PILE LENGTH (FT.)
END BENT 1			22.43'			22.45'			22.47'			22.49'			22.51'			22.53'		
BENT 2			23.37'			23.39'			23.40'			23.41'			23.42'			23.44'		
BENT 3			24.44'			24.40'			24.36'			24.32'			24.28'			24.24'		
BENT 4			25.11'			25.01'			24.91'			24.81'			24.71'			24.61'		
BENT 5			25.35'			25.19'			25.03'			24.86'			24.70'			24.54'		
BENT 6			25.14'			24.92'			24.70'			24.48'			24.25'			24.03'		
BENT 7			24.50'			24.22'			23.94'			23.67'			23.39'			23.11'		
END BENT 8			23.80'			23.47'			23.12'			22.78'			22.44'			22.10'		

PILES: ALL PILE REQUIREMENTS INCLUDING SIZE, TYPE, LOCATION, AND MAXIMUM DESIGN LOAD SHALL BE AS DESCRIBED IN THE CONTRACT DOCUMENTS. THE MINIMUM PILE TIP ELEVATION WILL BE THE PLAN TIP ELEVATION AS SHOWN IN THE PRODUCTION PILE DATA TABLE, UNLESS OTHERWISE NOTED OR OTHERWISE DIRECTED BY THE GEOTECHNICAL ENGINEER. PILE ORDER LENGTHS SHALL BE THE PLAN LENGTHS PROVIDED IN THE TABLE ABOVE.

PILE DRIVING EQUIPMENT APPROVAL: ALL PILE DRIVING EQUIPMENT SHALL BE APPROVED USING THE WAVE EQUATION HAMMER APPROVAL METHOD IN ACCORDANCE WITH ARTICLE 804.03 OF THE LOUISIANA STANDARD SPECIFICATIONS FOR ROADS AND BRIDGES, 2016 EDITION.

MONITOR PILES: THE FIRST PLUMB PILE DRIVEN AT INTERMEDIATE BENTS INDICATED ON THE PRODUCTION PILE DATA TABLE SHALL BE MONITORED WITH THE PILE DRIVING ANALYZER (PDA). AT THE DIRECTION OF THE GEOTECHNICAL ENGINEER, A ONE DAY RESTRIKE MAY BE REQUIRED AT EACH MONITOR PILE.

PILE CAPACITY VERIFICATION: SHALL BE BASED ON DRIVING CRITERIA ESTABLISHED FROM PILE DATA AND WAVE EQUATION ANALYSIS.

REQUIRED NOMINAL RESISTANCE: REQUIRED NOMINAL RESISTANCE "WITHOUT PREBORING" SHALL BE USED TO VERIFY PILE CAPACITY IF NO PREBORING IS PERFORMED. IF PREBORING TO THE SCOUR ELEVATION IS PERFORMED, THE REQUIRED NOMINAL RESISTANCE "PREBORING TO SCOUR" SHALL BE USED FOR PILE CAPACITY VERIFICATION.

STATE OF LOUISIANA
GERALD G. MENARD
License No. 20637
PROFESSIONAL ENGINEER
IN
CIVIL ENGINEERING
9/10/2020

SHEET NUMBER 207

PARISH: EAST BATON ROUGE
CITY: BATON ROUGE
PROJECT: 12-CS-HC-0043

DESIGNED PG
CHECKED GGM
DETAILED SJA
CHECKED GGM
DATE
SHEET

NO.	DATE	REVISION OR CHANGE ORDER DESCRIPTION	BY

PILE DATA TABLE
N.B. MALL OF LA BOULEVARD BRIDGE
MALL OF LOUISIANA BOULEVARD

EVANS-GRAVES ENGINEERS

F:\00_PROJECTS\12-500\Sheet_Sets\Construction - Revised\P2 Sheet 207 Pile Data Table01.dgn 9/10/2020 09:02

PRODUCTION PILE DATA TABLE (S.B. MALL OF LA BLVD BRIDGE)

BENT NO.	STATION	NO. OF PILES PER BENT	PILE TYPE & SIZE	MONITOR PILE REQUIRED (Y OR N)	LOAD (TONS)				SOIL RESISTANCE FACTOR (ø)			REQUIRED NOMINAL RESISTANCE (TONS)		MAX CUTOFF EL (ft.)	PLAN LENGTH (ft.)	PLAN TIP EL (ft.)	ORDER LENGTH (ft.)	AS-BUILT TIP EL (ft.)		
					SERVICE		STRENGTH		SERVICE	STRENGTH								MAX.	MIN.	AVG.
					PERMANENT LOAD	TRANSIENT LOAD	COMPRESSION	TENSION		COMPRESSION	TENSION	WITHOUT PREBORING	PREBORING TO SCOUR DEPTH							
END BENT 1	217+26.75	8	16" ø P.P.C.	N	25	27	73	-	1.0	0.65	-	158	112	23.53	56	-32.47				
1	217+16.00	1	16" ø P.P.C.	N	NA	NA	NA		NA	NA		NA	NA	23.76	30	-6.24				
1	216+90.00	1	16" ø P.P.C.	N	NA	NA	NA		NA	NA		NA	NA	22.49	30	-7.51				
2	217+76.00	4	24" ø P.P.C.	Y	55	71	175		1.0	0.65		322	269	24.30	97	-72.70				
3	218+26.00	4	24" ø P.P.C.	N	55	71	175		1.0	0.65		290	269	25.02	97	-71.98				
4	218+76.00	4	24" ø P.P.C.	Y	55	71	175		1.0	0.65		287	269	25.33	97	-71.67				
5	219+26.00	4	24" ø P.P.C.	N	55	71	175		1.0	0.65		300	269	25.19	97	-71.81				
6	219+76.00	4	24" ø P.P.C.	N	55	71	175		1.0	0.65		297	269	24.62	97	-72.38				
7	220+26.00	4	24" ø P.P.C.	Y	55	71	175		1.0	0.65		316	269	23.63	97	-73.37				
END BENT 8	220+75.25	8	16" ø P.P.C.	N	25	27	73		1.0	0.65		164	112	22.69	56	-33.31				
8	220+90.02	1	16" ø P.P.C.	N	NA	NA	NA		NA	NA		NA	NA	22.90	30	-7.10				
8	220+64.36	1	16" ø P.P.C.	N	NA	NA	NA		NA	NA		NA	NA	22.86	30	-7.14				

PILE #			1			2			3			4		
BENT #	STATION	PILE TYPE	PILE CUT-OFF ELEVATION	ESTIMATED PILE TIP ELEVATION	PILE LENGTH (FT.)	PILE CUT-OFF ELEVATION	ESTIMATED PILE TIP ELEVATION	PILE LENGTH (FT.)	PILE CUT-OFF ELEVATION	ESTIMATED PILE TIP ELEVATION	PILE LENGTH (FT.)	PILE CUT-OFF ELEVATION	ESTIMATED PILE TIP ELEVATION	PILE LENGTH (FT.)
END BENT 1			23.53'			23.14'			22.76'			22.37'		
			23.76'											
			22.49'											
BENT 2			24.30'			23.98'			23.66'			23.34'		
BENT 3			25.02'			24.77'			24.52'			24.27'		
BENT 4			25.33'			25.13'			24.94'			24.75'		
BENT 5			25.19'			25.05'			24.91'			24.79'		
BENT 6			24.61'			24.53'			24.44'			24.36'		
BENT 7			23.63'			23.61'			23.59'			23.57'		
END BENT 8			22.69'			22.67'			22.66'			22.65'		
			22.90'											
			22.86'											

FOR PILE NOTES SEE SHEET 207.

GERALD G. MENARD
License No. 20437
PROFESSIONAL ENGINEER
IN
CIVIL ENGINEERING
STATE OF LOUISIANA
9/10/2020

SHEET NUMBER 208

PARISH: EAST BATON ROUGE
CITY: BATON ROUGE
PROJECT: 12-CS-HC-0043

DESIGNED PG
CHECKED GGM
DETAILED SJA
CHECKED GGM
DATE
SHEET

NO. | DATE | BY | REVISION OR CHANGE ORDER DESCRIPTION

PILE DATA TABLE
S.B. MALL OF LA BOULEVARD BRIDGE
MALL OF LOUISIANA BOULEVARD

CITY OF BATON ROUGE ★ PARISH OF EAST BATON ROUGE

EVANS-GRAVES ENGINEERS

9/10/2020 09:02

F:\00_PROJECTS\12-500\Sheet_Sets\Construction - Revised\P2 Sheet 208 Pile Data Table02.dgn

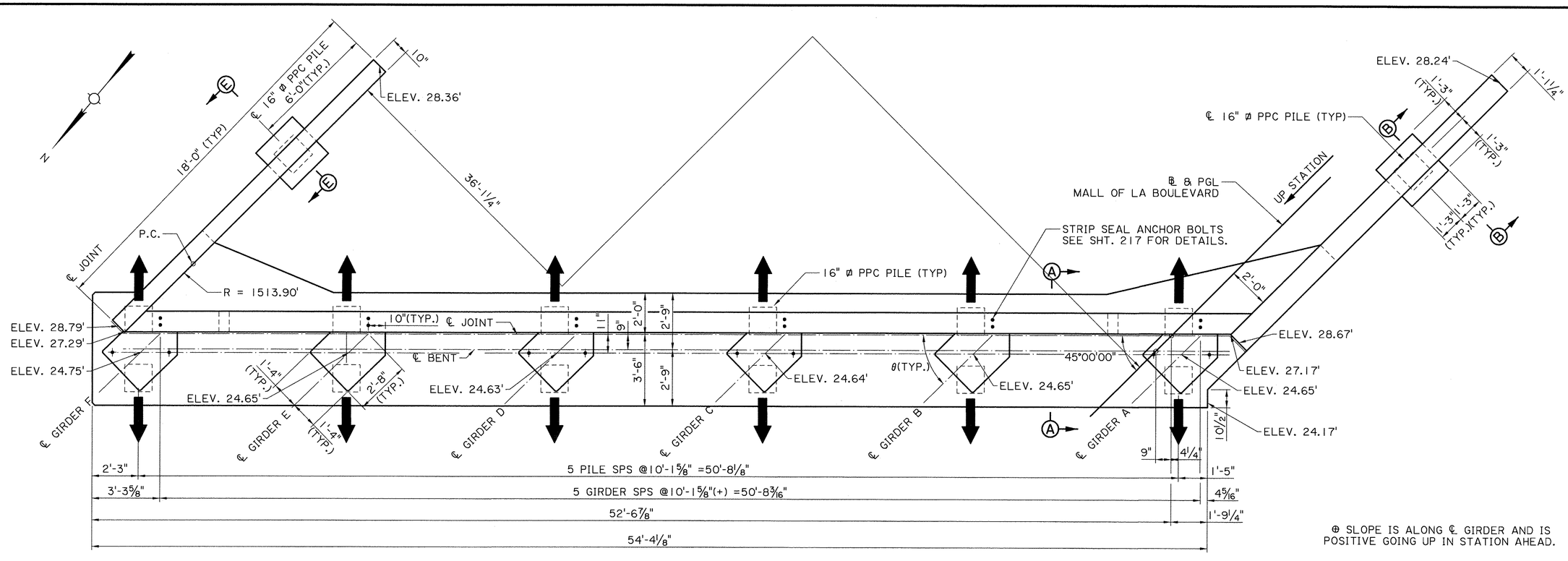

PLAN
SCALE ⅜" = 1'-0"

BATTER PILES 1 1/2 IN 12
(IN DIRECTION OF ARROW)

RISER TABLE						
BENT 1	RISER A	RISER B	RISER C	RISER D	RISER E	RISER F
θ	45°34'29"	44°06'46"	45°22'57"	43°50'38"	45°11'24"	43°34'21"
SLOPE ⊕	+2.39%	+2.39%	+2.40%	+2.40%	+2.38%	+2.35%

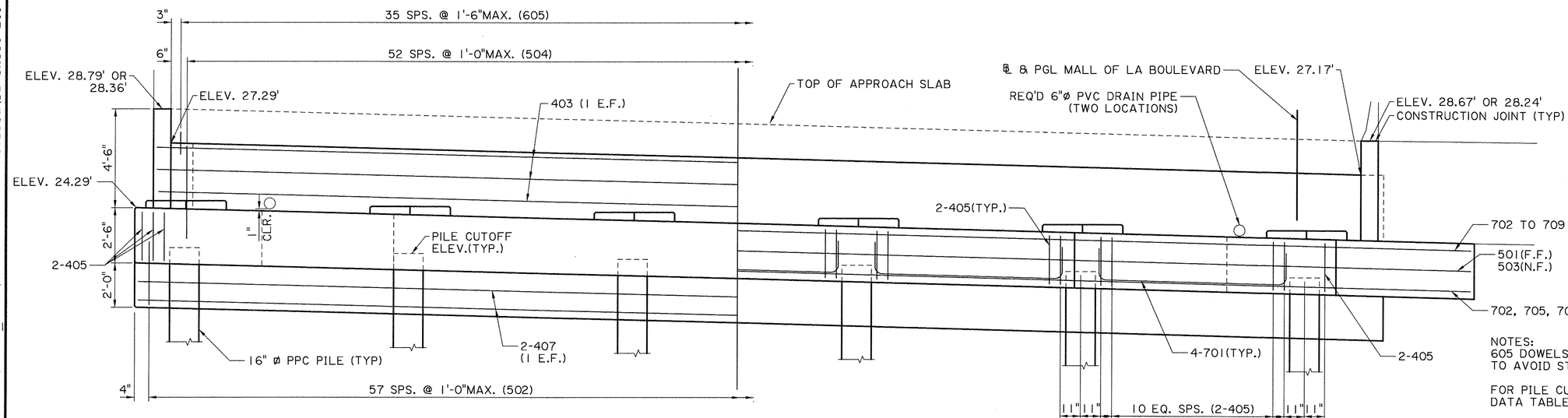

HALF ELEVATION
BACKWALL & KEY REINFORCING

ELEVATION
SCALE ⅜" = 1'-0"

HALF ELEVATION
CAP REINFORCING

NOTES:
605 DOWELS MAY BE SHIFTED TO AVOID STRIP SEAL ANCHOR BOLTS.

FOR PILE CUTOFF ELEVATIONS, SEE PILE DATA TABLE SHEET.

STATE OF LOUISIANA
GERALD G. MENARD
License No. 20437
PROFESSIONAL ENGINEER
IN
CIVIL ENGINEERING
9/10/2020

SHEET NUMBER 209

PARISH: EAST BATON ROUGE
CITY: BATON ROUGE
PROJECT: 12-CS-HC-0043

DESIGNED PG
CHECKED GGM
DETAILED SJA
CHECKED PG
DATE
SHEET

REVISION OR CHANGE ORDER DESCRIPTION | DATE | NO. | BY

END BENT 1 DETAILS NORTH BOUND
MALL OF LA BOULEVARD BRIDGE
MALL OF LOUISIANA BOULEVARD

EVANS-GRAVES ENGINEERS

F:\00_PROJECTS\12-500\Sheet_Sets\Construction - Revised\P2 Sheet 209 Picardy EB_NB1.dgn
EB_NB1.dgn
9/10/2020
09:02

F:\00_PROJECTS\12-500\Sheet_Sets\Construction - Revised\P2 Sheet 210 Picardy EB_NB2.dgn 9/10/2020 13:43

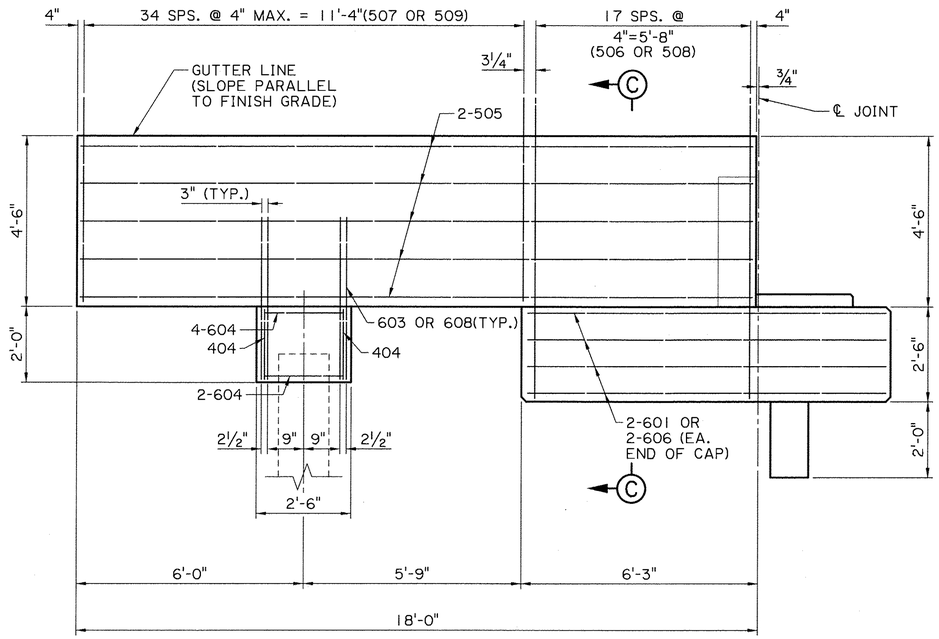

ELEVATION OF END BENT WINGWALL

SCALE: ½"=1'-0"

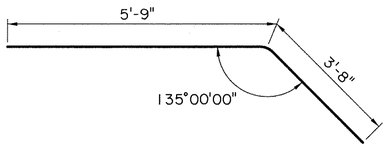

606
4½" Ø PIN

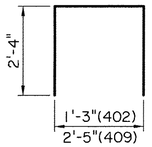

402 & 409
2" Ø PIN

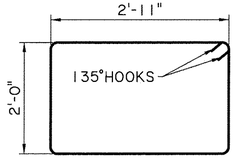

405
2" Ø PIN

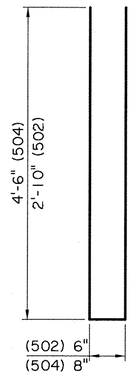

502 & 504
2½" Ø PIN

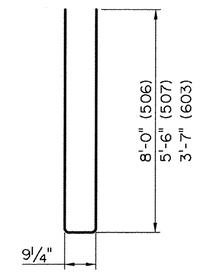

506, 507 & 603
2½" Ø PIN

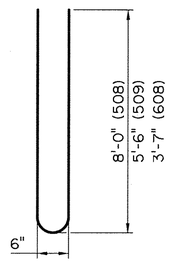

508, 509 & 608
4½" Ø PIN

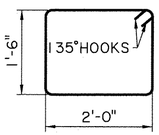

404
2" Ø PIN

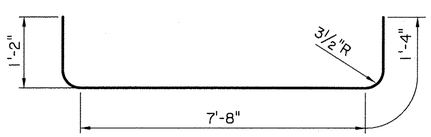

701
5¼" Ø PIN

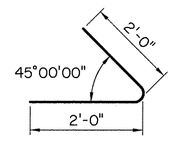

408
3" Ø PIN

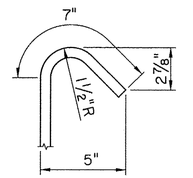

135° HOOK FOR #4
(2"ø PIN)

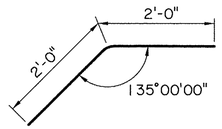

406
3" Ø PIN

ESTIMATED QUANTITIES (ONE END BENT)

	BAR	NO.	UNIT LENGTH	TOTAL LENGTH	LOCATION
	701	20	10'-4"	206'-8"	LONGIT. IN CAP BETWEEN PILES
	702	2	58'-1"	116'-2"	LONGIT. IN CAP
	703	1	57'-5"	57'-5"	LONGIT. IN CAP
	704	1	56'-9"	56'-9"	LONGIT. IN CAP
	705	2	56'-0"	112'-0"	LONGIT. IN CAP
	706	2	55'-4"	110'-8"	LONGIT. IN CAP
	707	1	54'-8"	54'-8"	LONGIT. IN CAP
	708	1	54'-0"	54'-0"	LONGIT. IN CAP
	709	2	53'-10"	107'-8"	LONGIT. IN CAP
	TOTAL NO. 7 BARS = 876'-0" = 1791 LBS.				
	601	8	9'-3"	74'-0"	CAP ENDS
	602	16	10'-6"	168'-0"	CAP CHAMFER
	603	4	7'-11"	31'-8"	WINGWALL CAP DOWELS
	604	12	2'-0"	24'-0"	WINGWALL CAP
	605	36	2'-0"	72'-0"	BACKWALL APPR. SLAB DOWELS
	606	8	9'-5"	75'-4"	CAP ENDS
	607	16	14'-3"	228'-0"	CAP CHAMFER
	608	4	7'-8"	30'-8"	WINGWALL CAP DOWELS
	TOTAL NO. 6 BARS = 703'-8" = 1057 LBS.				
	501	1	58'-1"	58'-1"	LONGIT. IN CAP
	502	58	6'-2"	357'-8"	STIRRUPS IN KEY
	503	1	53'-10"	53'-10"	LONGIT. IN CAP
	504	53	9'-8"	512'-4"	VERTICAL IN BACKWALL
	505	20	17'-7"	351'-8"	HORIZONTAL IN WINGWALL
	506	18	16'-9"	301'-6"	VERTICAL IN WINGWALL
	507	35	11'-9"	411'-3"	VERTICAL IN WINGWALL
	508	18	16'-6"	297'-0"	VERTICAL IN WINGWALL
	509	35	11'-6"	402'-6"	VERTICAL IN WINGWALL
	TOTAL NO. 5 BARS = 2745'-10" = 2864 LBS.				
	401	18	2'-5"	43'-6"	RISERS
	402	24	5'-11"	142'-0"	RISERS
*	403	6	56'-0"	336'-0"	LONGIT. IN BACKWALL
	404	4	7'-9"	31'-0"	WINGWALL PILE CAP
	405	138	10'-7"	1460'-6"	STIRRUPS
	406	3	4'-0"	12'-0"	BACKWALL/WINGWALL CORNER
*	407	4	57'-4"	229'-4"	LONGIT. IN KEY
	408	3	4'-0"	12'-0"	BACKWALL/WINGWALL CORNER
	409	12	7'-1"	85'-0"	RISERS
	410	6	0'-11"	5'-6"	RISERS
	411	12	1'-6"	18'-0"	RISERS
	TOTAL NO. 4 BARS = 2374'-10" = 1586 LBS.				

	TOTAL DEFORMED REINF. STEEL	**7298 LBS.**
	CLASS 6A4000 CONCRETE	**48.71 CU. YDS.**
⊠	**STRUCTURAL STEEL**	**150 LBS.**
	CONCRETE BRIDGE RAILING(32")	**18.00 LIN. FT.**
	CONCRETE / METAL BRIDGE RAILING	**18.00 LIN. FT.**

* INCLUDES (1) ONE 1'-8" MIN. LAP SPLICE, ALL SPLICES ARE TO BE STAGGERED

⊠ FOR ESTIMATION PURPOSES ONLY. TO BE INCLUDED UNDER ITEM 6020600, STRUCTURAL STEEL, LUMP SUM.

STATE OF LOUISIANA
GERALD G. MENARD
License No. 20437
PROFESSIONAL ENGINEER
IN
CIVIL ENGINEERING
9/10/2020

SHEET NUMBER 210

PARISH EAST BATON ROUGE
CITY BATON ROUGE
PROJECT 12-CS-HC-0043

DESIGNED PG
CHECKED GGM
DETAILED SLA
CHECKED PG
DATE
SHEET

NO.	DATE	REVISION OR CHANGE ORDER DESCRIPTION	BY

END BENT 1 DETAILS
NORTH BOUND
MALL OF LA BOULEVARD BRIDGE

MALL OF LOUISIANA BOULEVARD

CITY OF BATON ROUGE PARISH OF EAST BATON ROUGE

EVANS-GRAVES ENGINEERS

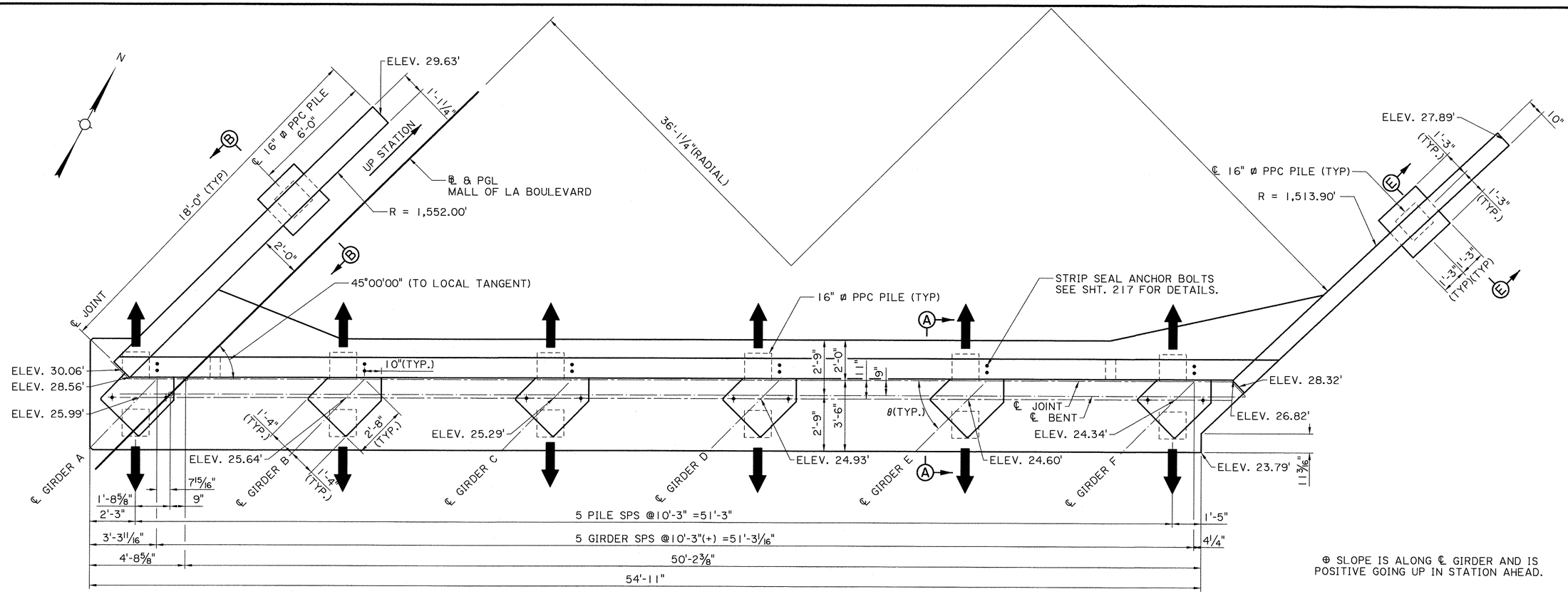

⊕ SLOPE IS ALONG ℄ GIRDER AND IS POSITIVE GOING UP IN STATION AHEAD.

BATTER PILES 1 1/2 IN 12 (IN DIRECTION OF ARROW)

PLAN

SCALE 3/8" = 1'-0"

RISER TABLE						
BENT 8	RISER A	RISER B	RISER C	RISER D	RISER E	RISER F
θ	45°34'29"	44°06'46"	45°22'57"	43°50'38"	45°11'24"	43°34'21"
SLOPE ⊕	-2.07%	-2.18%	-2.27%	-2.35%	-2.40%	-2.44%

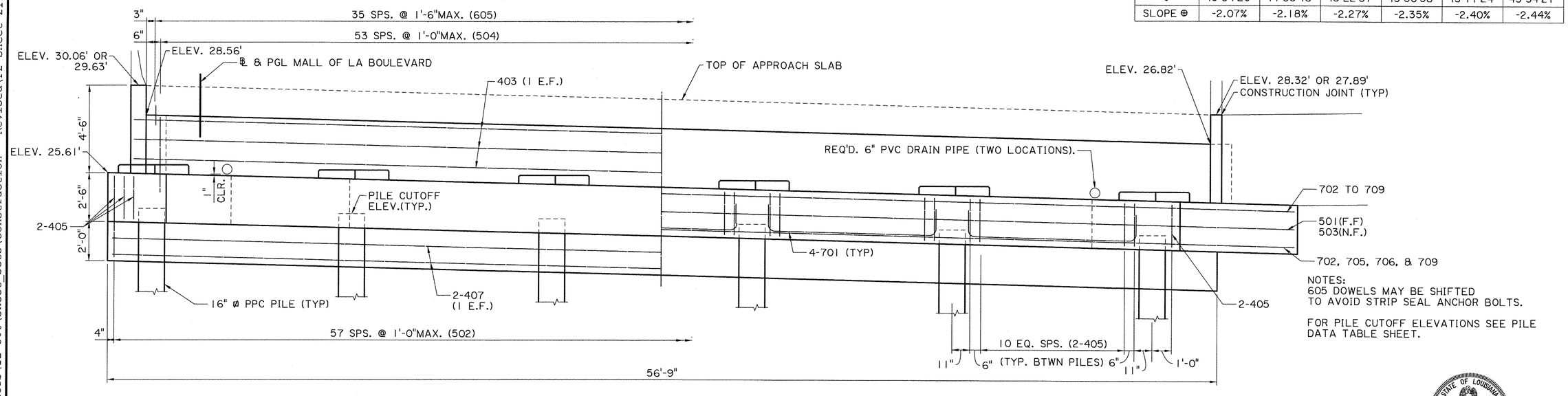

NOTES:
605 DOWELS MAY BE SHIFTED TO AVOID STRIP SEAL ANCHOR BOLTS.

FOR PILE CUTOFF ELEVATIONS SEE PILE DATA TABLE SHEET.

HALF ELEVATION

BACKWALL & KEY REINFORCING

ELEVATION

SCALE 3/8" = 1'-0"

HALF ELEVATION

CAP REINFORCING

STATE OF LOUISIANA
GERALD G. MENARD
License No. 20437
PROFESSIONAL ENGINEER
IN
CIVIL ENGINEERING
9/10/2020

SHEET NUMBER 211

PARISH: EAST BATON ROUGE
CITY: BATON ROUGE
PROJECT: 12-CS-HC-0043

DESIGNED PG
CHECKED GGM
DETAILED SJA
CHECKED PG
DATE
SHEET

NO. | DATE | REVISION OR CHANGE ORDER DESCRIPTION | BY

END BENT 8 DETAILS
NORTH BOUND
MALL OF LA BOULEVARD BRIDGE
MALL OF LOUISIANA BOULEVARD

CITY OF BATON ROUGE ★ PARISH OF EAST BATON ROUGE ★

EVANS-GRAVES ENGINEERS

F:\00_PROJECTS\12-500\Sheet_Sets\Construction - Revised\P2 Sheet 211 Picardy EB_NB3.dgn
9/10/2020
09:03

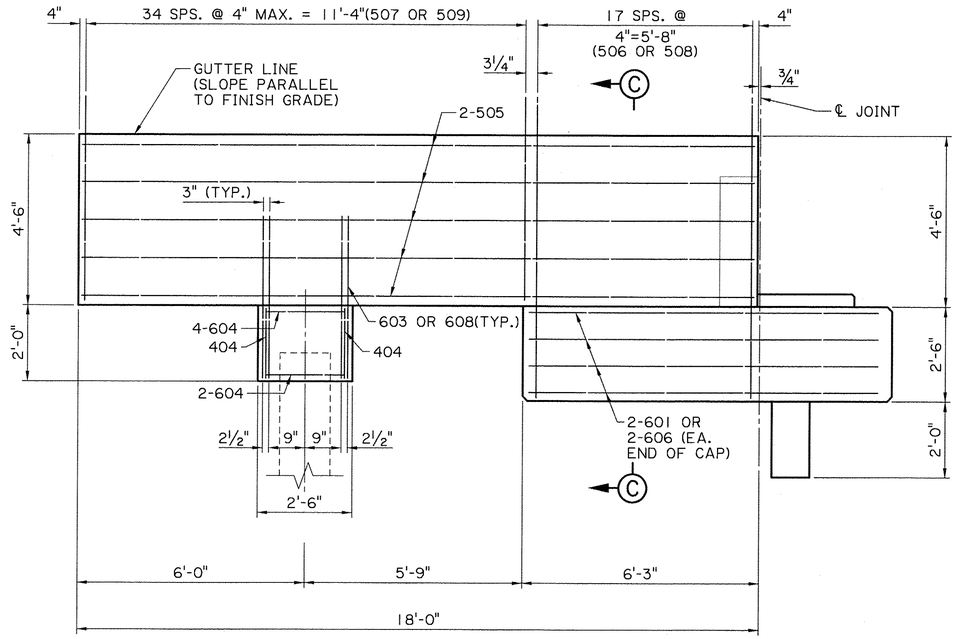

ELEVATION OF END BENT WINGWALL

SCALE: ½"=1'-0"

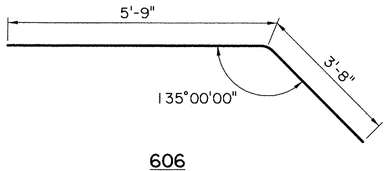

606
4½" Ø PIN

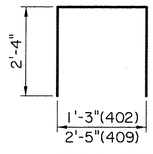

402 & 409
2" Ø PIN

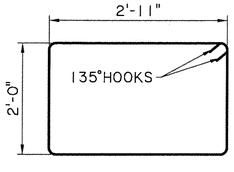

405
2" Ø PIN

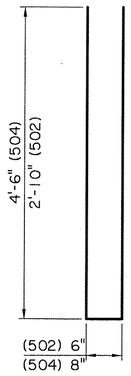

502 & 504
2½" Ø PIN

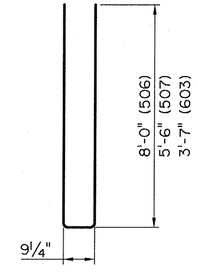

506, 507 & 603
2½" Ø PIN

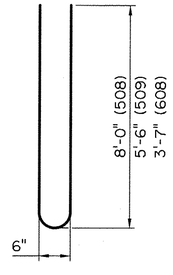

508, 509 & 608
4½" Ø PIN

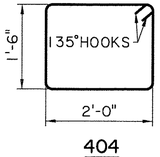

404
2" Ø PIN

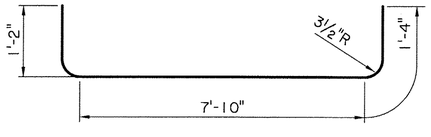

701
5¼" Ø PIN

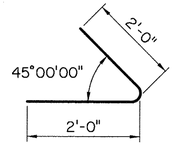

408
3" Ø PIN

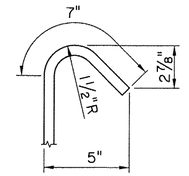

135° HOOK FOR #4
(2"ø PIN)

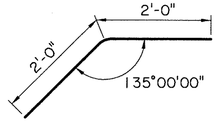

406
3" Ø PIN

ESTIMATED QUANTITIES (ONE END BENT)

	BAR	NO.	UNIT LENGTH	TOTAL LENGTH	LOCATION
	701	20	10'-6"	210'-0"	LONGIT. IN CAP BETWEEN PILES
	702	2	58'-8"	117'-4"	LONGIT. IN CAP
	703	1	58'-0"	58'-0"	LONGIT. IN CAP
	704	1	57'-4"	57'-4"	LONGIT. IN CAP
	705	2	56'-7"	113'-2"	LONGIT. IN CAP
	706	2	55'-11"	111'-10"	LONGIT. IN CAP
	707	1	55'-3"	55'-3"	LONGIT. IN CAP
	708	1	54'-7"	54'-7"	LONGIT. IN CAP
	709	2	54'-5"	108'-10"	LONGIT. IN CAP
	TOTAL NO. 7 BARS = 886'-4" = 1812 LBS.				
	601	8	9'-3"	74'-0"	CAP ENDS
	602	16	10'-6"	168'-0"	CAP CHAMFER
	603	4	7'-11"	31'-8"	WINGWALL CAP DOWELS
	604	12	2'-0"	24'-0"	WINGWALL CAP
	605	36	2'-0"	72'-0"	BACKWALL APPR. SLAB DOWELS
	606	8	9'-5"	75'-4"	CAP ENDS
	607	16	14'-3"	228'-0"	CAP CHAMFER
	608	4	7'-8"	30'-8"	WINGWALL CAP DOWELS
	TOTAL NO. 6 BARS = 703'-8" = 1057 LBS.				
	501	1	58'-8"	58'-8"	LONGIT. IN CAP
	502	58	6'-2"	357'-8"	STIRRUPS IN KEY
	503	1	54'-5"	54'-5"	LONGIT. IN CAP
	504	54	9'-8"	522'-0"	VERTICAL IN BACKWALL
	505	20	17'-7"	351'-8"	HORIZONTAL IN WINGWALL
	506	18	16'-9"	301'-6"	VERTICAL IN WINGWALL
	507	35	11'-9"	411'-3"	VERTICAL IN WINGWALL
	508	18	16'-6"	297'-0"	VERTICAL IN WINGWALL
	509	35	11'-6"	402'-6"	VERTICAL IN WINGWALL
	TOTAL NO. 5 BARS = 2756'-8" = 2875 LBS.				
	401	18	2'-5"	43'-6"	RISERS
	402	24	5'-11"	142'-0"	RISERS
*	403	6	56'-8"	340'-0"	LONGIT. IN BACKWALL
	404	4	7'-9"	31'-0"	WINGWALL PILE CAP
	405	138	10'-7"	1460'-6"	STIRRUPS
	406	3	4'-0"	12'-0"	BACKWALL/WINGWALL CORNER
*	407	4	57'-11"	231'-8"	LONGIT. IN KEY
	408	3	4'-0"	12'-0"	BACKWALL/WINGWALL CORNER
	409	12	7'-1"	85'-0"	RISERS
	410	6	0'-11"	5'-6"	RISERS
	411	12	1'-6"	18'-0"	RISERS
	TOTAL NO. 4 BARS = 2381'-2" = 1591 LBS.				

TOTAL DEFORMED REINF. STEEL	**7335 LBS.**
CLASS 6A4000 CONCRETE	**49.01 CU. YDS.**
⊠ **STRUCTURAL STEEL**	**150 LBS.**
CONCRETE BRIDGE RAILING(32")	**18.00 LIN. FT.**
CONCRETE / METAL BRIDGE RAILING	**18.00 LIN. FT.**

* INCLUDES (1) ONE 1'-8" MIN. LAP SPLICE, ALL SPLICES ARE TO BE STAGGERED

⊠ FOR ESTIMATION PURPOSES ONLY. TO BE INCLUDED UNDER ITEM 6020600, STRUCTURAL STEEL, LUMP SUM.

STATE OF LOUISIANA
GERALD G. MENARD
License No. 20437
PROFESSIONAL ENGINEER
IN
CIVIL ENGINEERING
9/10/2020

SHEET NUMBER 212

PARISH: EAST BATON ROUGE
CITY: BATON ROUGE
PROJECT: 12-CS-HC-0043

DESIGNED PG
CHECKED GGM
DETAILED SJA
CHECKED PG
DATE
SHEET

NO. | DATE | REVISION OR CHANGE ORDER DESCRIPTION | BY

END BENT 8 DETAILS
NORTH BOUND
MALL OF LA BOULEVARD BRIDGE
MALL OF LOUISIANA BOULEVARD

EVANS-GRAVES ENGINEERS

9/10/2020 13:43
F:\00_PROJECTS\12-500\Sheet_Sets\Construction - Revised\P2 Sheet 212 Picardy EB_NB4.dgn

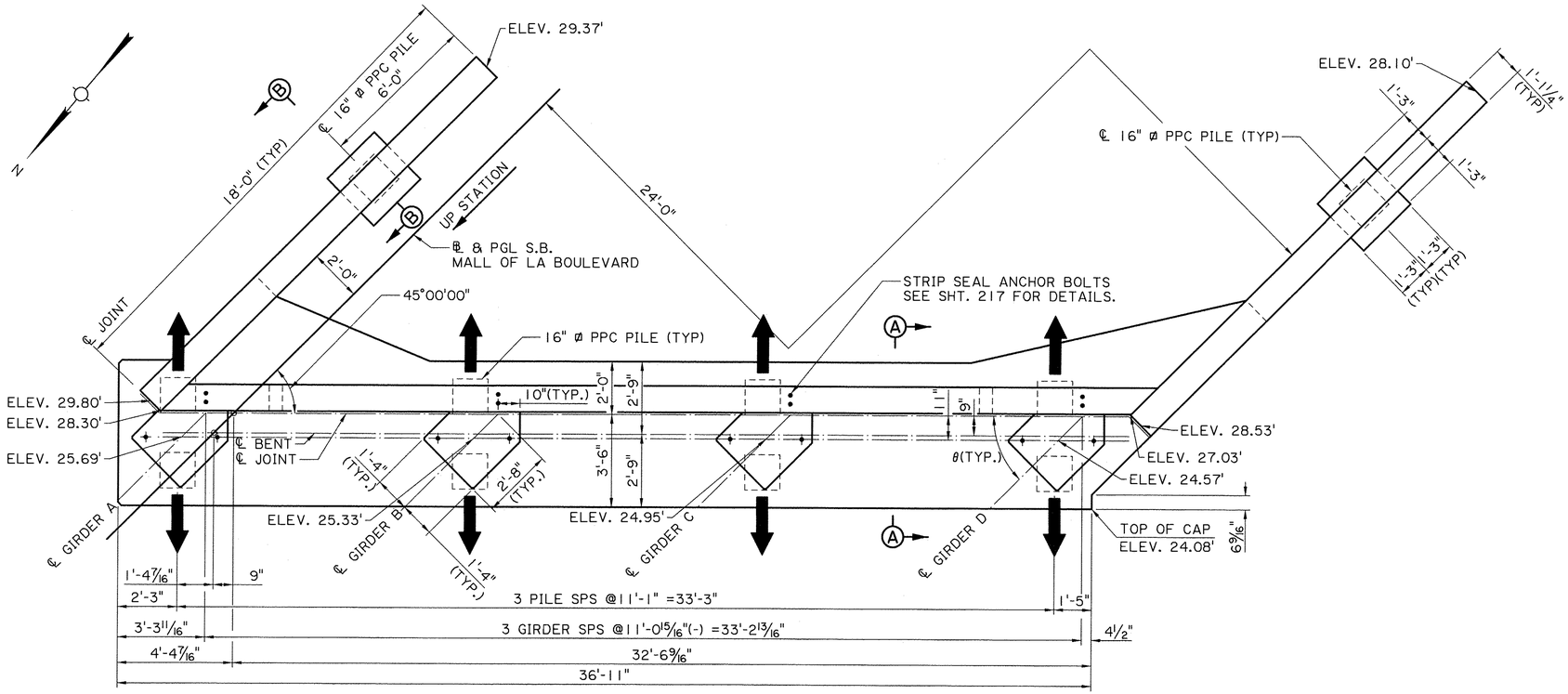

PLAN
SCALE 3/8" = 1'-0"

⊕ SLOPE IS ALONG ℄ GIRDER AND IS POSITIVE GOING UP IN STATION AHEAD.

RISER TABLE				
BENT 1	RISER A	RISER B	RISER C	RISER D
θ	45°00'00"	45°00'00"	45°00'00"	45°00'00"
SLOPE ⊕	2.22%	2.29%	2.35%	2.38%

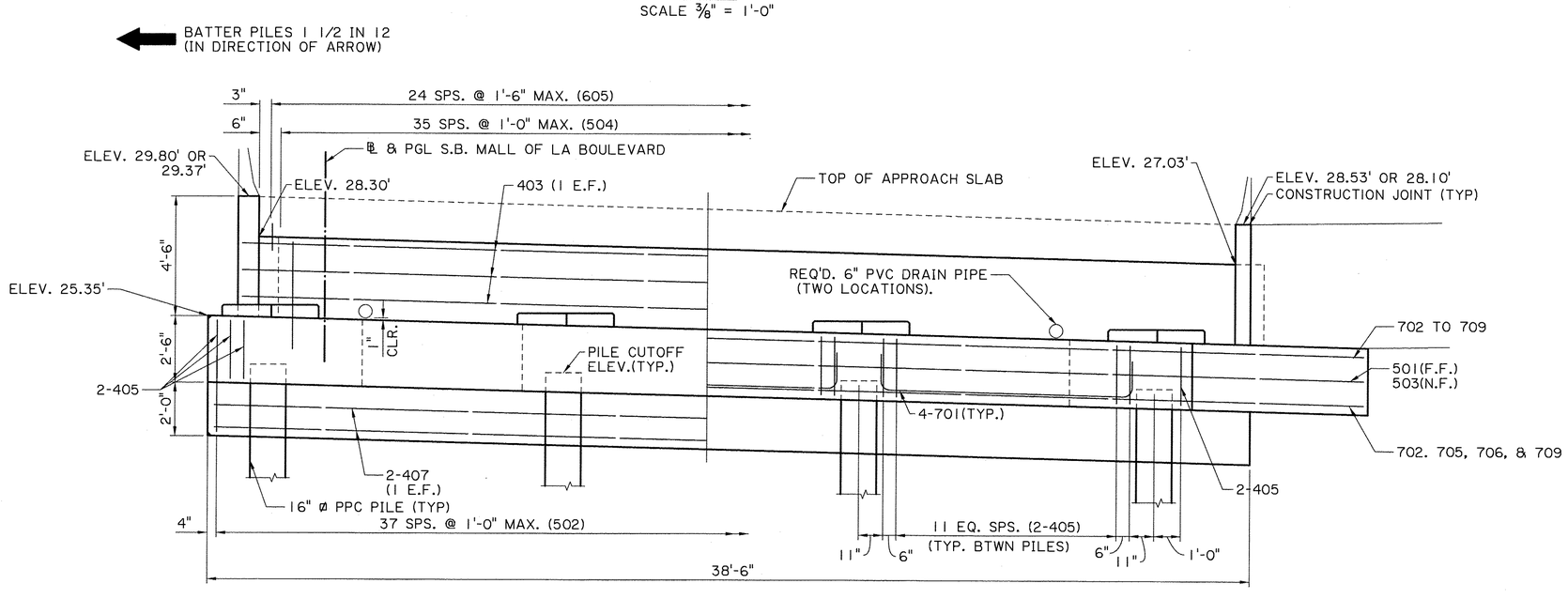

HALF ELEVATION
BACKWALL & KEY REINFORCING

ELEVATION
SCALE 3/8" = 1'-0"

HALF ELEVATION
CAP REINFORCING

NOTES:
605 DOWELS MAY BE SHIFTED TO AVOID STRIP SEAL ANCHOR BOLTS.

FOR PILE CUTOFF ELEVATIONS SEE PILE DATA TABLE SHEET.

STATE OF LOUISIANA
GERALD G. MENARD
License No. 20437
PROFESSIONAL ENGINEER
IN
CIVIL ENGINEERING
9/10/2020

SHEET NUMBER 213

PARISH: EAST BATON ROUGE
CITY: BATON ROUGE
PROJECT: 12-CS-HC-0043

DESIGNED PG
CHECKED GGM
DETAILED SJA
CHECKED PG
DATE
SHEET

REVISION OR CHANGE ORDER DESCRIPTION | BY | NO. | DATE

END BENT 1 DETAILS
SOUTH BOUND
MALL OF LA BOULEVARD BRIDGE
MALL OF LOUISIANA BOULEVARD

EVANS-GRAVES ENGINEERS

9/10/2020 13:43
F:\00_PROJECTS\12-500\Sheet_Sets\Construction - Revised\P2 Sheet 213 Picardy EB_SB1.dgn

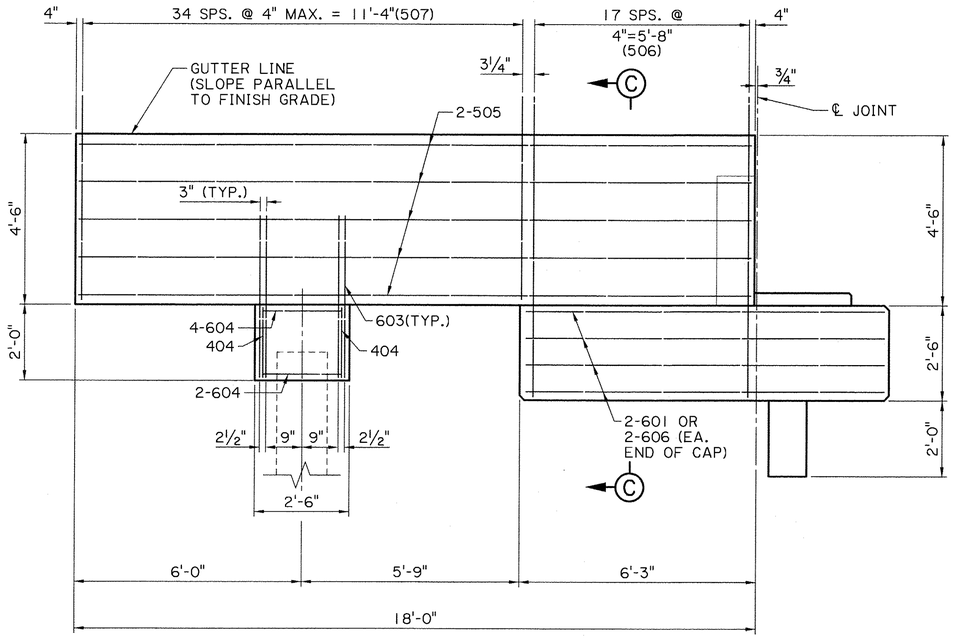

ELEVATION OF END BENT WINGWALL

SCALE: ½"=1'-0"

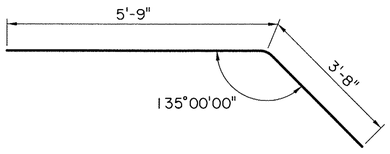

606
4½" Ø PIN

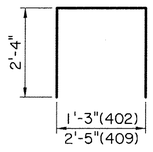

402 & 409
2" Ø PIN

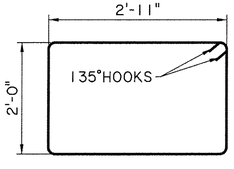

405
2" Ø PIN

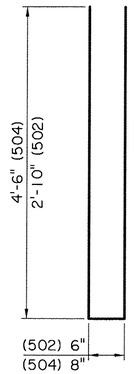

502 & 504
2½" Ø PIN

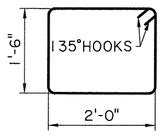

404
2" Ø PIN

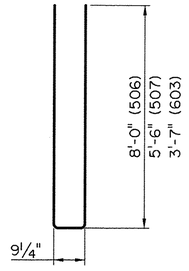

506, 507 & 603
2½" Ø PIN

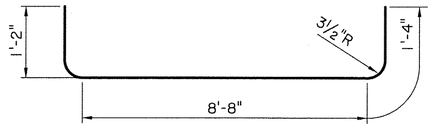

701
5¼" Ø PIN

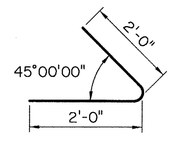

408
3" Ø PIN

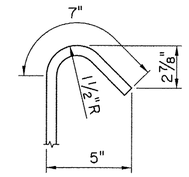

135° HOOK FOR #4
(2"ø PIN)

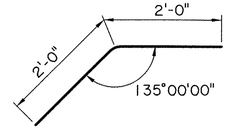

406
3" Ø PIN

ESTIMATED QUANTITIES (ONE END BENT)

BAR	NO.	UNIT LENGTH	TOTAL LENGTH	LOCATION
701	12	11'-4"	136'-0"	LONGIT. IN CAP BETWEEN PILES
702	2	41'-0"	82'-0"	LONGIT. IN CAP
703	1	40'-4"	40'-4"	LONGIT. IN CAP
704	1	39'-8"	39'-8"	LONGIT. IN CAP
705	2	39'-0"	78'-0"	LONGIT. IN CAP
706	2	38'-3"	76'-6"	LONGIT. IN CAP
707	1	37'-7"	37'-7"	LONGIT. IN CAP
708	1	36'-10"	36'-10"	LONGIT. IN CAP
709	2	36'-5"	72'-10"	LONGIT. IN CAP
TOTAL NO. 7 BARS = 599'-9" = 1226 LBS.				
601	8	9'-3"	74'-0"	CAP ENDS
602	16	10'-6"	168'-0"	CAP CHAMFER
603	8	7'-11"	63'-4"	WINGWALL CAP DOWELS
604	12	2'-0"	24'-0"	WINGWALL CAP
605	25	2'-0"	50'-0"	BACKWALL APPR. SLAB DOWELS
606	8	9'-5"	75'-4"	CAP ENDS
607	16	14'-3"	228'-0"	CAP CHAMFER
TOTAL NO. 6 BARS = 682'-8" = 1025 LBS.				
501	1	41'-0"	41'-0"	LONGIT. IN CAP
502	38	6'-2"	234'-4"	STIRRUPS IN KEY
503	1	36'-5"	36'-5"	LONGIT. IN CAP
504	36	9'-8"	348'-0"	VERTICAL IN BACKWALL
505	20	17'-7"	351'-8"	HORIZONTAL IN WINGWALL
506	36	16'-9"	603'-0"	VERTICAL IN WINGWALL
507	70	11'-9"	822'-6"	VERTICAL IN WINGWALL
TOTAL NO. 5 BARS = 2436'-11" = 2542 LBS.				
401	12	2'-5"	29'-0"	RISERS
402	16	5'-11"	94'-8"	RISERS
403	6	37'-10"	227'-0"	LONGIT. IN BACKWALL
404	4	7'-9"	31'-0"	WINGWALL PILE CAP
405	92	10'-7"	973'-8"	STIRRUPS
406	3	4'-0"	12'-0"	BACKWALL/WINGWALL CORNER
407	4	38'-0"	152'-0"	LONGIT. IN KEY
408	3	4'-0"	12'-0"	BACKWALL/WINGWALL CORNER
409	8	7'-1"	56'-8"	RISERS
410	4	0'-11"	3'-8"	RISERS
411	8	1'-6"	12'-0"	RISERS
TOTAL NO. 4 BARS = 1603'-8" = 1071 LBS.				

TOTAL DEFORMED REINF. STEEL	**5864 LBS.**
CLASS 6A4000 CONCRETE	**34.83 CU. YDS.**
⊠ **STRUCTURAL STEEL**	**105 LBS.**
CONCRETE RAILING(BARRIER)	**36.00 LIN. FT.**

⊠ FOR ESTIMATION PURPOSES ONLY. TO BE INCLUDED UNDER ITEM 6020600, STRUCTURAL STEEL, LUMP SUM.

STATE OF LOUISIANA
GERALD G. MENARD
License No. 20437
PROFESSIONAL ENGINEER
IN
CIVIL ENGINEERING
9/10/2020

SHEET NUMBER 214

PARISH: EAST BATON ROUGE
CITY: BATON ROUGE
PROJECT: 12-CS-HC-0043

DESIGNED PG
CHECKED GGM
DETAILED SJA
CHECKED PG
DATE
SHEET

REVISION OR CHANGE ORDER DESCRIPTION | BY | NO. | DATE

END BENT 1 DETAILS
SOUTH BOUND
MALL OF LA BOULEVARD BRIDGE
MALL OF LOUISIANA BOULEVARD

CITY OF BATON ROUGE ★ PARISH OF EBR

EVANS-GRAVES ENGINEERS

9/10/2020 09:03
F:\00_PROJECTS\12-500\Sheet_Sets\Construction - Revised\P2 Sheet 214 Picardy EB_SB2.dgn

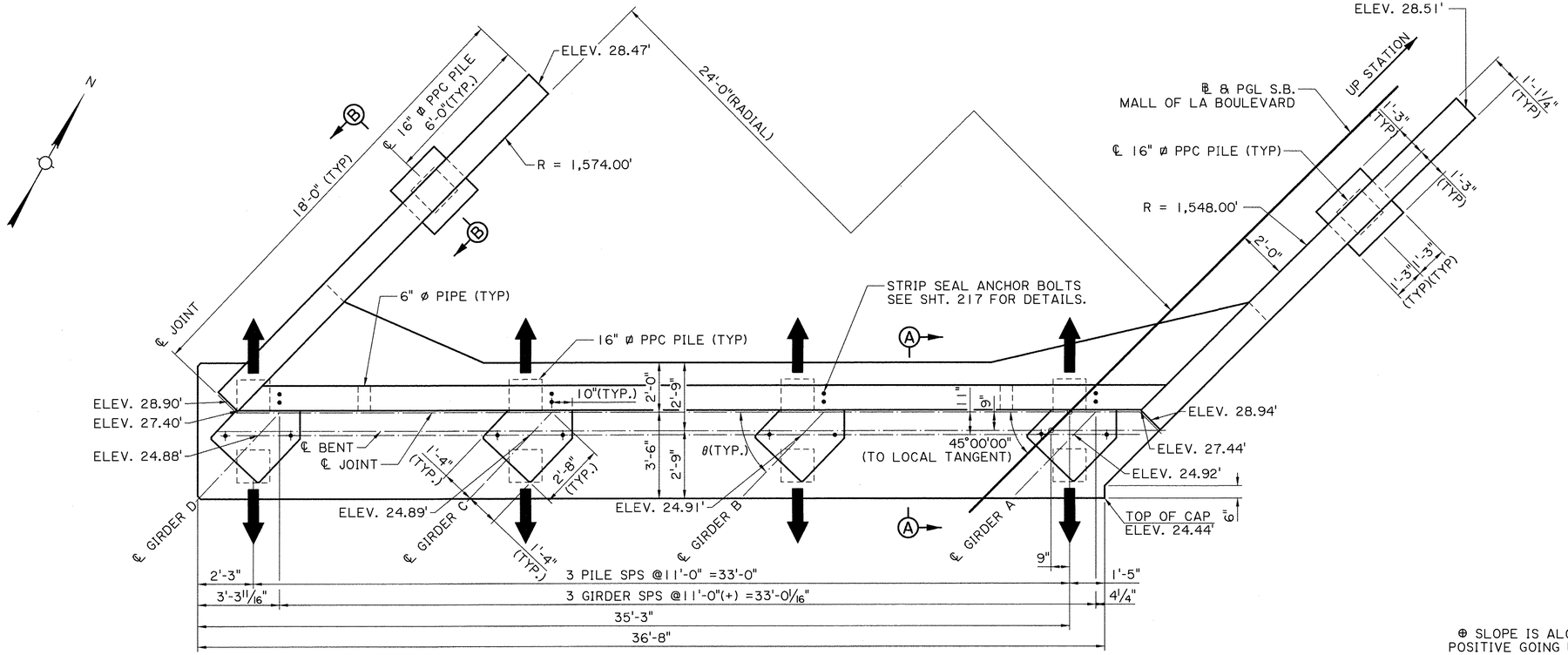

PLAN
SCALE 3/8" = 1'-0"

⊕ SLOPE IS ALONG ℄ GIRDER AND IS POSITIVE GOING UP IN STATION AHEAD.

RISER TABLE				
BENT 8	RISER A	RISER B	RISER C	RISER D
θ	45°53'47"	46°10'58"	46°27'59"	46°44'49"
SLOPE ⊕	-2.38%	-2.36%	-2.34%	-2.28%

BATTER PILES 1 1/2 IN 12
(IN DIRECTION OF ARROW)

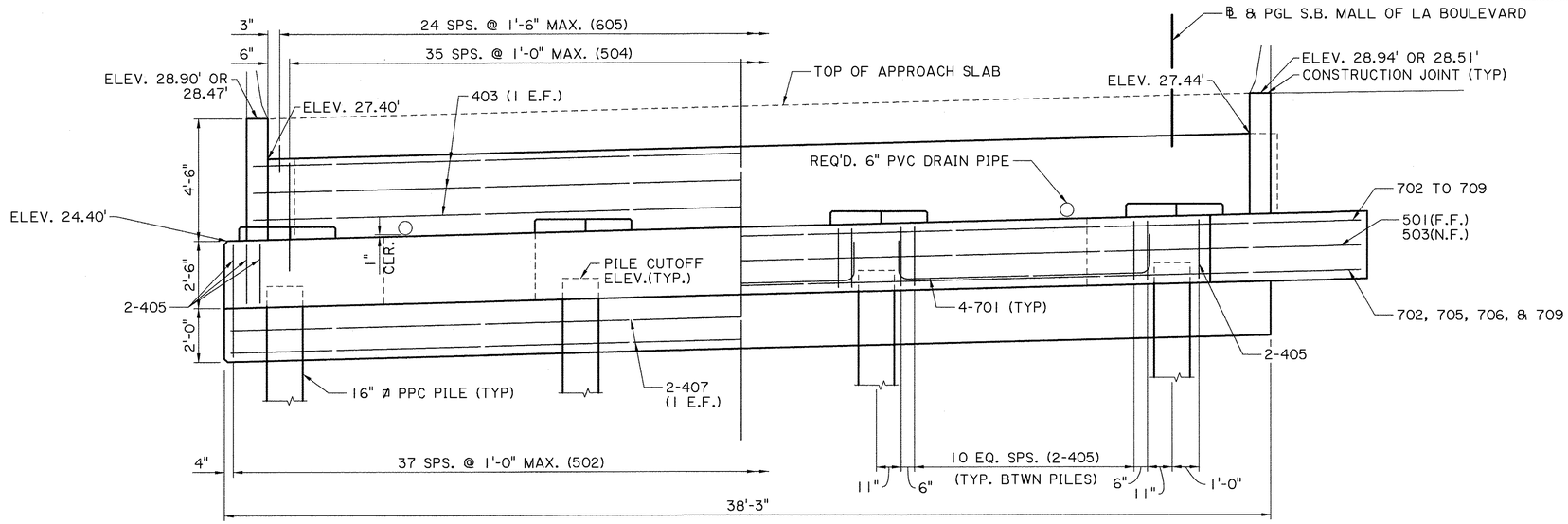

HALF ELEVATION
BACKWALL & KEY REINFORCING

ELEVATION
SCALE 3/8" = 1'-0"

HALF ELEVATION
CAP REINFORCING

NOTES:
605 DOWELS MAY BE SHIFTED TO AVOID STRIP SEAL ANCHOR BOLTS.

FOR PILE CUTOFF ELEVATIONS SEE PILE DATA TABLE SHEET.

STATE OF LOUISIANA
GERALD G. MENARD
License No. 20437
PROFESSIONAL ENGINEER
IN
CIVIL ENGINEERING
9/13/2020

SHEET NUMBER 215

PARISH	CITY	PROJECT
EAST BATON ROUGE	BATON ROUGE	12-CS-HC-0043

	DESIGNED	CHECKED
	PG	GGM
DETAILED	CHECKED	
JKL	PG	

NO.	DATE	REVISION OR CHANGE ORDER DESCRIPTION	BY

END BENT 8 DETAILS
SOUTH BOUND
MALL OF LA BOULEVARD BRIDGE
MALL OF LOUISIANA BOULEVARD

CITY OF BATON ROUGE PARISH OF EAST BATON ROUGE

EVANS-GRAVES ENGINEERS

9/10/2020 13:43
F:\00_PROJECTS\12-500\Sheet_Sets\Construction - Revised\P2 Sheet 215 Picardy EB_SB3.dgn

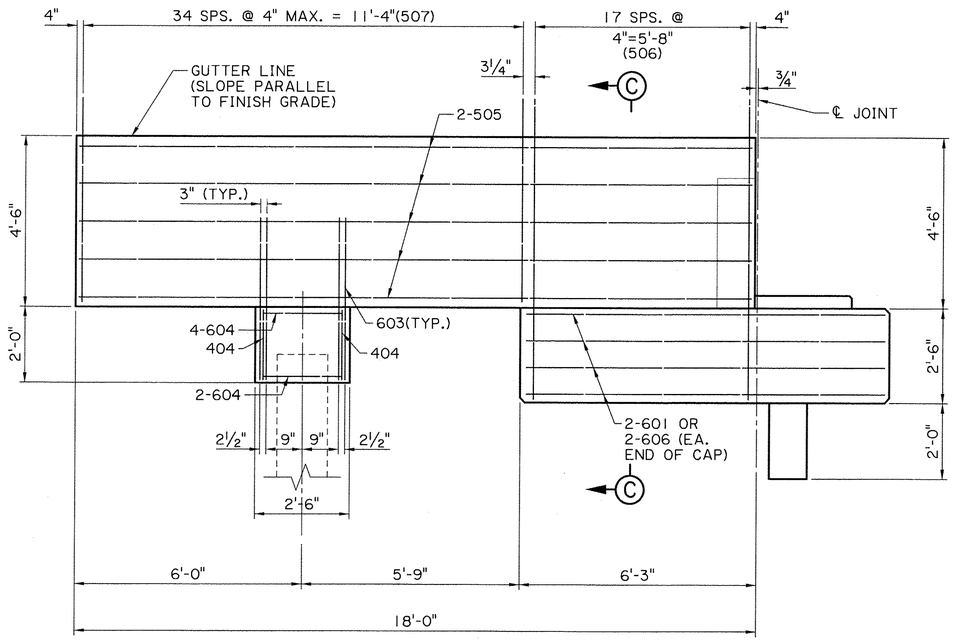

ELEVATION OF END BENT WINGWALL

SCALE: ½"=1'-0"

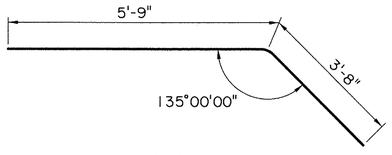

606
4½" Ø PIN

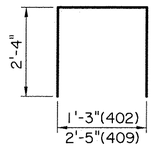

402 & 409
2" Ø PIN

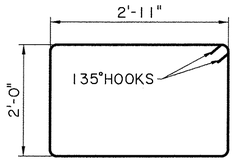

405
2" Ø PIN

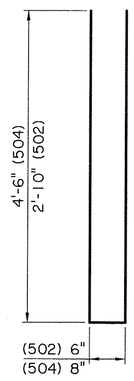

502 & 504
2½" Ø PIN

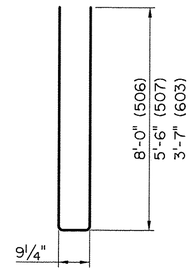

506, 507 & 603
2½" Ø PIN

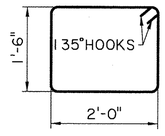

404
2" Ø PIN

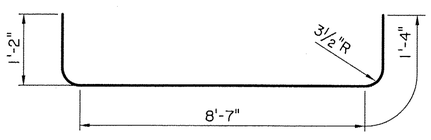

701
5¼" Ø PIN

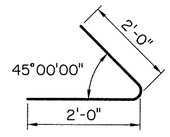

408
3" Ø PIN

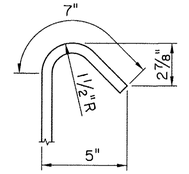

135° HOOK FOR #4
(2"ø PIN)

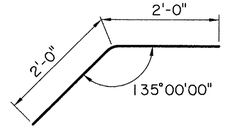

406
3" Ø PIN

ESTIMATED QUANTITIES (ONE END BENT)

BAR	NO.	UNIT LENGTH	TOTAL LENGTH	LOCATION
701	12	11'-3"	135'-0"	LONGIT. IN CAP BETWEEN PILES
702	2	40'-9"	81'-6"	LONGIT. IN CAP
703	1	40'-1"	40'-1"	LONGIT. IN CAP
704	1	39'-5"	39'-5"	LONGIT. IN CAP
705	2	38'-9"	77'-6"	LONGIT. IN CAP
706	2	38'-0"	76'-0"	LONGIT. IN CAP
707	1	37'-4"	37'-4"	LONGIT. IN CAP
708	1	36'-7"	36'-7"	LONGIT. IN CAP
709	2	36'-2"	72'-4"	LONGIT. IN CAP
TOTAL NO. 7 BARS = 595'-9" = 1218 LBS.				
601	8	9'-3"	74'-0"	CAP ENDS
602	16	10'-6"	168'-0"	CAP CHAMFER
603	8	7'-11"	63'-4"	WINGWALL CAP DOWELS
604	12	2'-0"	24'-0"	WINGWALL CAP
605	25	2'-0"	50'-0"	BACKWALL APPR. SLAB DOWELS
606	8	9'-5"	75'-4"	CAP ENDS
607	16	14'-3"	228'-0"	CAP CHAMFER
TOTAL NO. 6 BARS = 682'-8" = 1025 LBS.				
501	1	40'-9"	40'-9"	LONGIT. IN CAP
502	38	6'-2"	234'-4"	STIRRUPS IN KEY
503	1	36'-2"	36'-2"	LONGIT. IN CAP
504	36	9'-8"	348'-0"	VERTICAL IN BACKWALL
505	20	17'-7"	351'-8"	HORIZONTAL IN WINGWALL
506	36	16'-9"	603'-0"	VERTICAL IN WINGWALL
507	70	11'-9"	822'-6"	VERTICAL IN WINGWALL
TOTAL NO. 5 BARS = 2436'-5" = 2541 LBS.				
401	12	2'-5"	29'-0"	RISERS
402	16	5'-11"	94'-8"	RISERS
403	6	37'-10"	227'-0"	LONGIT. IN BACKWALL
404	4	7'-9"	31'-0"	WINGWALL PILE CAP
405	86	10'-7"	910'-2"	STIRRUPS
406	3	4'-0"	12'-0"	BACKWALL/WINGWALL CORNER
407	4	37'-9"	151'-0"	LONGIT. IN KEY
408	3	4'-0"	12'-0"	BACKWALL/WINGWALL CORNER
409	8	7'-1"	56'-8"	RISERS
410	4	0'-11"	3'-8"	RISERS
411	8	1'-6"	12'-0"	RISERS
TOTAL NO. 4 BARS = 1539'-2" = 1028 LBS.				

TOTAL DEFORMED REINF. STEEL	**5812 LBS.**
CLASS 6A4000 CONCRETE	**34.68 CU. YDS.**
⊠ **STRUCTURAL STEEL**	**105 LBS.**
CONCRETE RAILING(BARRIER)	**36.00 LIN. FT.**

⊠ FOR ESTIMATION PURPOSES ONLY. TO BE INCLUDED UNDER ITEM 6020600, STRUCTURAL STEEL, LUMP SUM.

STATE OF LOUISIANA
GERALD G. MENARD
License No. 20437
PROFESSIONAL ENGINEER
IN
CIVIL ENGINEERING
9/10/2020

SHEET NUMBER 216

PARISH: EAST BATON ROUGE
CITY: BATON ROUGE
PROJECT: 12-CS-HC-0043

DESIGNED PG
CHECKED GGM
DETAILED SJA
CHECKED PG
DATE
SHEET

NO. | DATE | BY | REVISION OR CHANGE ORDER DESCRIPTION

END BENT 8 DETAILS
SOUTH BOUND
MALL OF LA BOULEVARD BRIDGE
MALL OF LOUISIANA BOULEVARD

EVANS-GRAVES ENGINEERS

F:\00_PROJECTS\12-500\Sheet_Sets\Construction - Revised\P2 Sheet 216 Picardy EB_SB4.dgn 9/10/2020 09:04

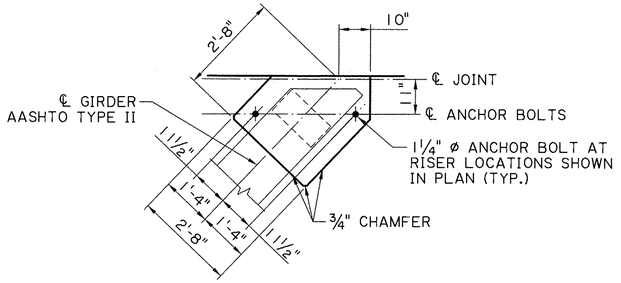

RISER PLAN DETAIL

SCALE: ½"=1'-0"

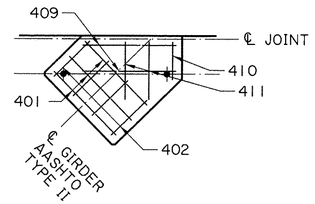

RISER REINFORCING DETAIL

SCALE: ½"=1'-0"

NOTE: RISERS SHALL BE HORIZONTAL IN DIRECTION PERPENDICULAR TO GIRDER ℄

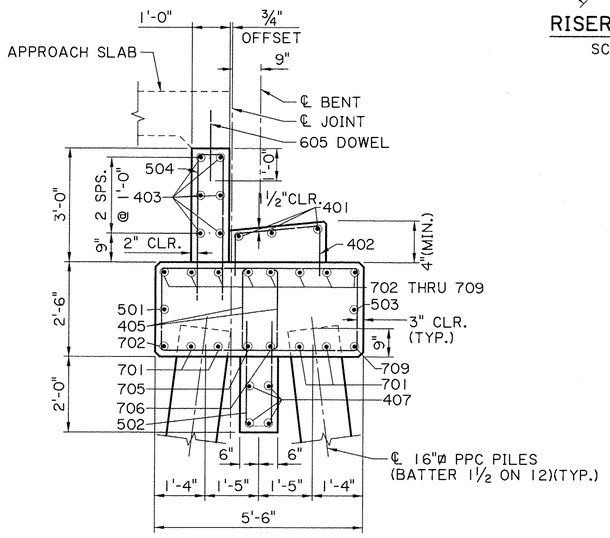

SECTION A-A

SCALE: ½"=1'-0"

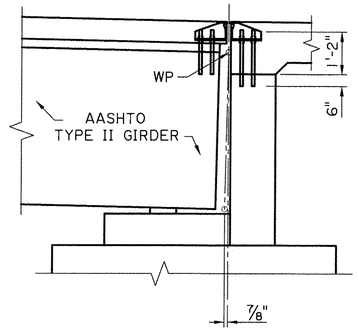

CONNECTION DETAIL

(ALONG ℄ GIRDER)
SCALE: ½"=1'-0"

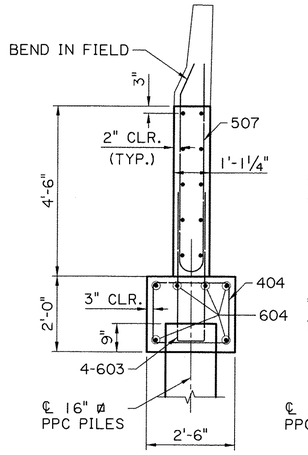

SECTION B-B

SCALE: ½"-1'-0"

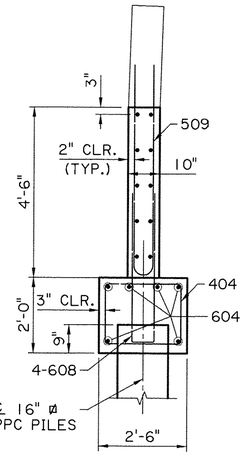

SECTION E-E

SCALE: ½"-1'-0"

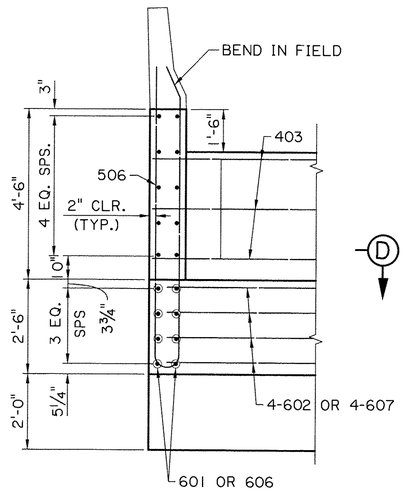

SECTION C-C

SCALE: ½"=1'-0"

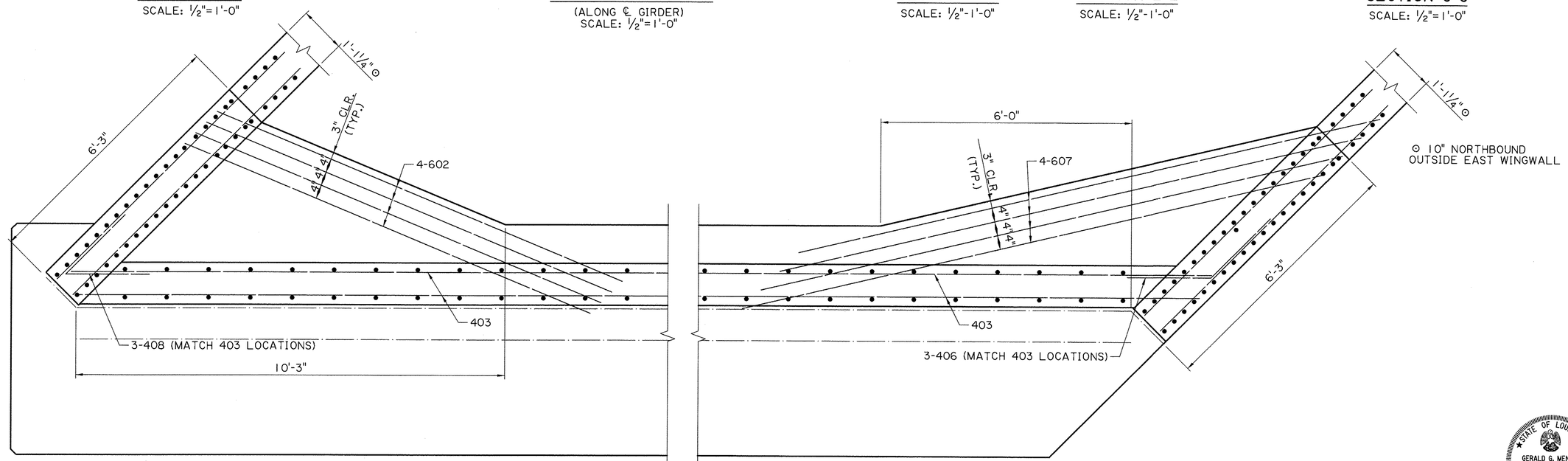

SECTION D-D

SCALE: ¾"=1'-0"

STATE OF LOUISIANA
GERALD G. MENARD
License No. 20437
PROFESSIONAL ENGINEER
IN
CIVIL ENGINEERING
9/10/2020

SHEET NUMBER 217

PARISH	CITY	PROJECT
EAST BATON ROUGE	BATON ROUGE	12-CS-HC-0043

DESIGNED	PG	
CHECKED	GGM	
DETAILED	SJA	
CHECKED	PG	
DATE		
SHEET		

NO.	DATE	REVISION OR CHANGE ORDER DESCRIPTION	BY

END BENT DETAILS

MALL OF LA BOULEVARD BRIDGE

MALL OF LOUISIANA BOULEVARD

EVANS-GRAVES ENGINEERS

F:\00_PROJECTS\12-500\Sheet_Sets\Construction - Revised\P2 Sheet 217 Picardy EB_Details.dgn 9/10/2020 09:04

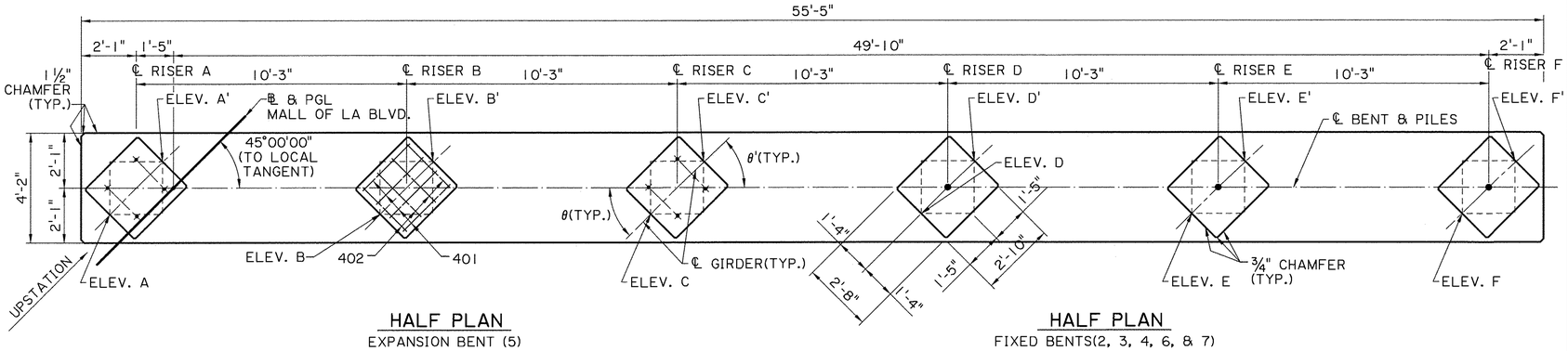

HALF PLAN
EXPANSION BENT (5)

HALF PLAN
FIXED BENTS(2, 3, 4, 6, & 7)

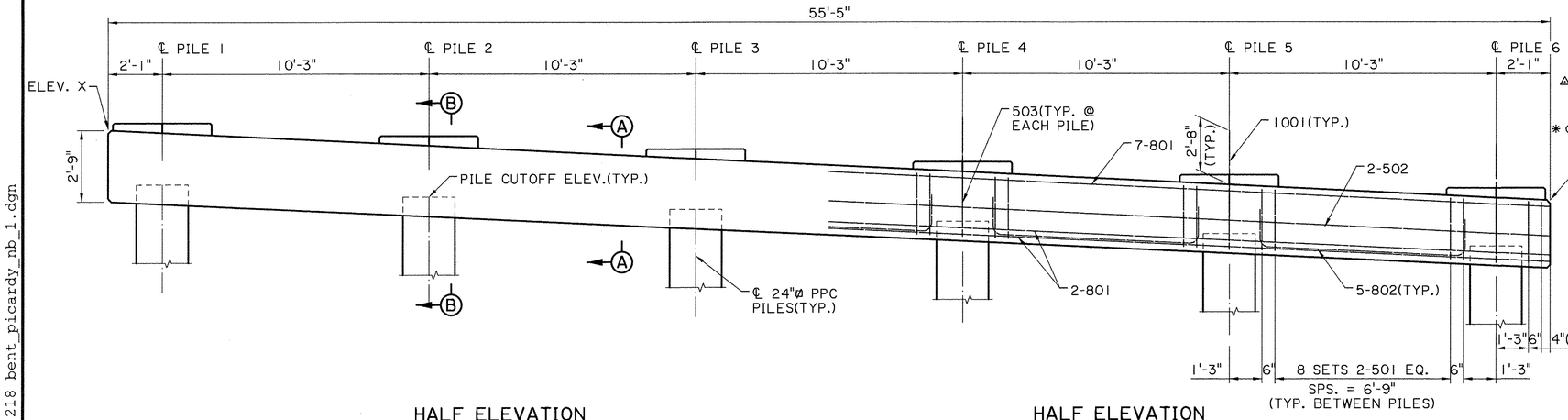

HALF ELEVATION
EXPANSION BENT (5)

HALF ELEVATION
FIXED BENTS(2, 3, 4, 6, & 7)

ESTIMATED QUANTITIES (ONE BENT)

BAR	NO.	UNIT LENGTH	TOTAL LENGTH	LOCATION
1001	6	3'-8"	22'-0"	DOWELS IN PILE CAP AND RISER
TOTAL NO. 10 BARS = 22'-0" = 95 LBS.				
801	11	54'-11"	604'-1"	LONGIT. IN CAP
802	25	10'-3"	256'-3"	LONGIT. IN CAP BETWEEN PILES
TOTAL NO. 8 BARS = 860'-4" = 2297 LBS.				
501	108	10'-7"	1143'-0"	STIRRUPS
502	2	54'-11"	109'-10"	LONGIT. IN CAP
503	6	8'-2"	49'-0"	STIRRUPS @ PILES
TOTAL NO.5 BARS = 1301'-10" = 1358 LBS.				
401	24	5'-3"	126'-0"	RISERS
402	24	2'-5"	58'-0"	RISERS
TOTAL NO. 4 BARS = 184'-0" = 123 LBS.				

TOTAL DEFORMED REINFORCING STEEL △	**3873 LBS.**
CLASS 6A4000 CONCRETE	**23.55 CU. YDS.**
STRUCTURAL STEEL	**84 LBS.**

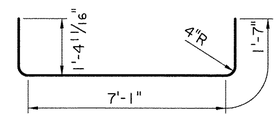

802
(6"ø PIN)

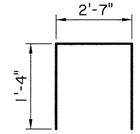

401
(2"ø PIN)

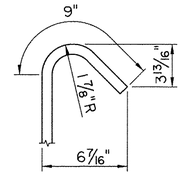

135° HOOK FOR 501
(2½"ø PIN)

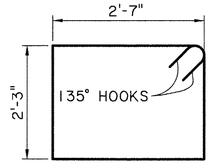

501
(2½"ø PIN)

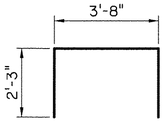

503
(2½"ø PIN)

GIRDER ANGLES												
BENT NO.	θA	θ'A	θB	θ'B	θC	θ'C	θD	θ'D	θE	θ'E	θF	θ'F
2	45°34'29"	44°06'46"	45°22'57"	43°50'38"	45°11'24"	43°34'21"	44°53'18"	43°17'55"	44°48'18"	43°01'20"	44°36'44"	42°44'35"
3-7	44°06'46"	45°57'40"	43°50'38"	45°41'32"	43°34'21"	45°25'15"	43°17'55"	45°08'49"	43°01'20"	44°52'13"	42°44'35"	44°35'29"

BENT ELEVATIONS														
BENT NO.	A	A'	B	B'	C	C'	D	D'	E	E'	F	F'	X	Y
2	25.78'	25.85'	25.78'	25.84'	25.78'	25.84'	25.77'	25.83'	25.78'	25.84'	25.86'	25.92'	25.37'	25.45'
3	26.87'	26.92'	26.82'	26.87'	26.76'	26.80'	26.69'	26.72'	26.63'	26.67'	26.65'	26.68'	26.46'	26.24'
4	27.55'	27.58'	27.43'	27.46'	27.31'	27.33'	27.18'	27.19'	27.06'	27.07'	27.01'	27.02'	27.14'	26.60'
5	27.80'	27.80'	27.62'	27.62'	27.44'	27.43'	27.24'	27.23'	27.06'	27.04'	26.95'	26.93'	27.39'	26.52'
6	27.63'	27.61'	27.39'	27.36'	27.13'	27.11'	26.87'	26.84'	26.63'	26.59'	26.46'	26.42'	27.19'	26.00'
7	27.03'	26.98'	26.72'	26.67'	26.41'	26.35'	26.08'	26.03'	25.78'	25.71'	25.54'	25.47'	26.56'	25.06'

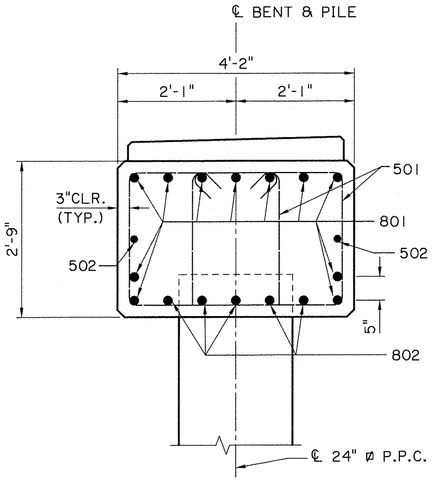

SECTION A-A
SCALE ¾" = 1'-0"

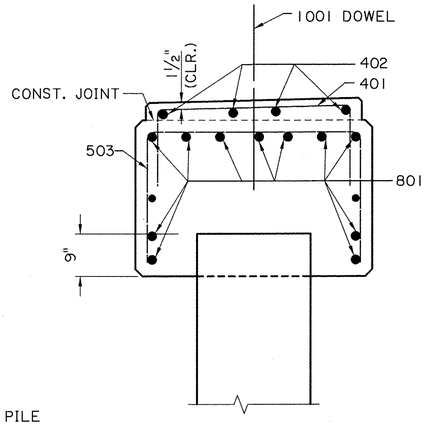

SECTION B-B
SCALE ¾" = 1'-0"

△ INCLUDES 95 LBS. (10 DOWELS 1001 AT 3'-8" EA.) FOR FIXED BENTS.
✱ FOR ESTIMATION PURPOSES ONLY. TO BE INCLUDED UNDER ITEM 6020600, "STRUCTURAL STEEL," LUMP SUM.
⊙ FOR EXPANSION BENT 5 ONLY.

NOTES:

FOR GENERAL NOTES SEE "GENERAL NOTES" SHEET.
FOR PILE CUTOFF ELEVATIONS AND PILE LOADS SEE PILE DATA SHEET.

STATE OF LOUISIANA
GERALD G. MENARD
License No. 20437
PROFESSIONAL ENGINEER
IN
CIVIL ENGINEERING
9/10/2020

SHEET NUMBER 218
EAST BATON ROUGE PARISH | BATON ROUGE CITY | 12-CS-HC-0043 PROJECT
DESIGNED PG | CHECKED GGM | DETAILED S.J.A. | CHECKED PG | DATE | SHEET
NO. | DATE | BY | REVISION OR CHANGE ORDER DESCRIPTION

INTERMEDIATE BENT 2-7 DETAILS
NORTH BOUND
MALL OF LA BOULEVARD BRIDGE
MALL OF LOUISIANA BOULEVARD

CITY OF BATON ROUGE ★ PARISH OF EAST BATON ROUGE

EVANS-GRAVES ENGINEERS

9/10/2020 09:04
F:\00_PROJECTS\12-500\Sheet_Sets\Construction - Revised\P2 Sheet 218 bent_picardy_nb_1.dgn

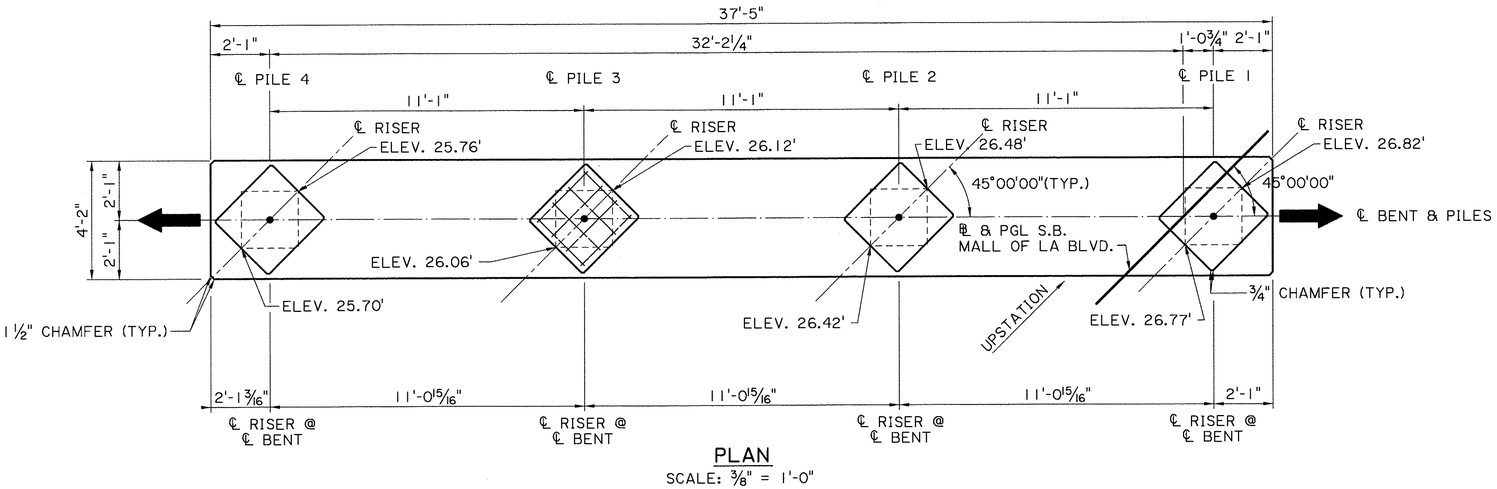

PLAN

SCALE: ⅜" = 1'-0"

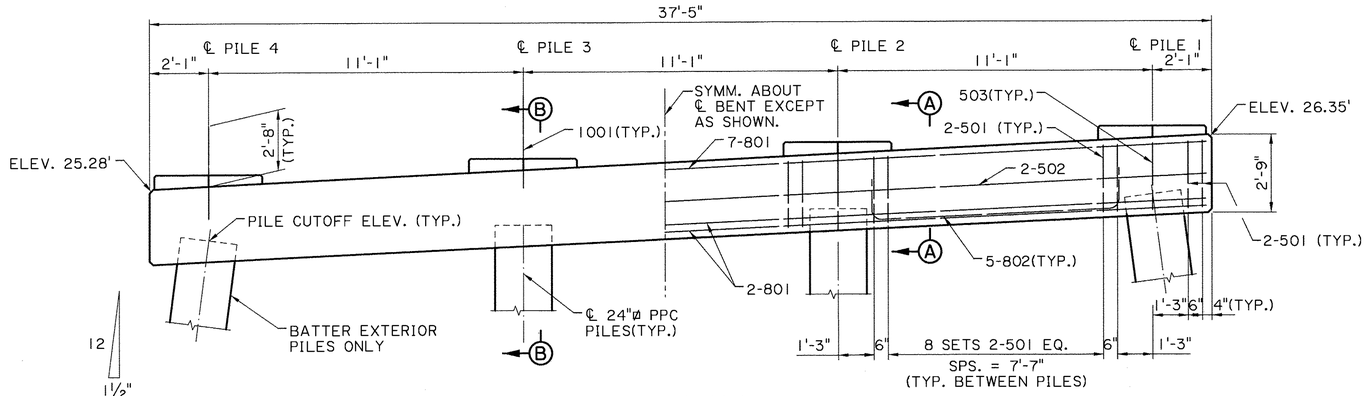

ELEVATION

SCALE: ⅜" = 1'-0"

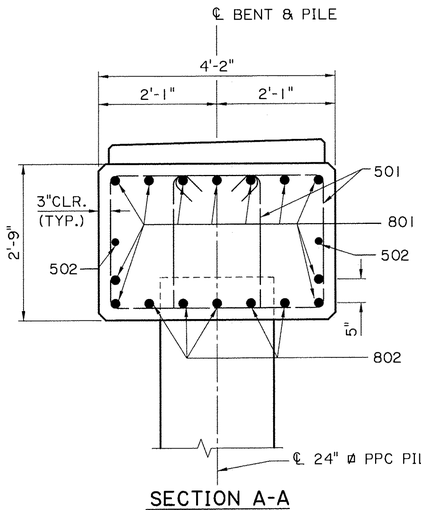

SECTION A-A

SCALE ¾" = 1'-0"

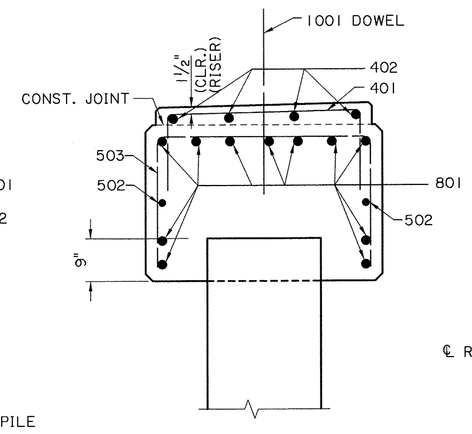

SECTION B-B

SCALE ¾" = 1'-0"

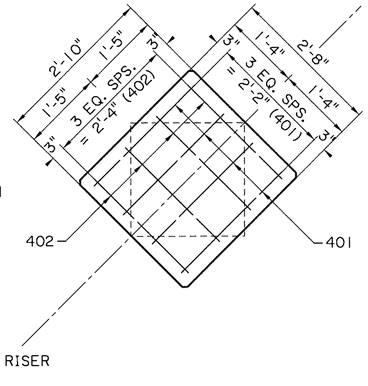

TYPICAL RISER PLAN

SCALE ¾" = 1'-0"

ESTIMATED QUANTITIES (ONE BENT)

BAR	NO.	UNIT LENGTH	TOTAL LENGTH	LOCATION
1001	4	3'-8"	14'-8"	DOWELS IN PILE CAP AND RISER
TOTAL NO. 10 BARS = 14'-8" = 63 LBS.				
801	11	36'-11"	406'-1"	LONGIT. IN CAP
802	15	11'-1"	166'-3"	LONGIT. IN CAP BETWEEN PILES
TOTAL NO. 8 BARS = 572'-4" = 1528 LBS.				
501	68	10'-7"	719'-8"	STIRRUPS
502	2	36'-11"	73'-10"	LONGIT. IN CAP
503	4	8'-2"	32'-8"	STIRRUPS @ PILES
TOTAL NO.5 BARS = 826'-2" = 862 LBS.				
401	16	5'-3"	84'-0"	RISERS
402	16	2'-5"	38'-8"	RISERS
TOTAL NO. 4 BARS = 122'-8" = 82 LBS.				

TOTAL DEFORMED REINFORCING STEEL 2535 LBS.

CLASS 6A4000 CONCRETE 15.90 CU. YDS.

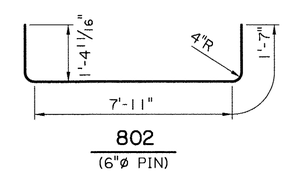

802

(6"ø PIN)

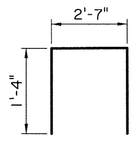

401

(2"ø PIN)

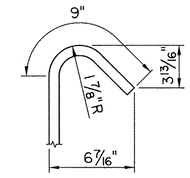

135° HOOK FOR 501

(2½"ø PIN)

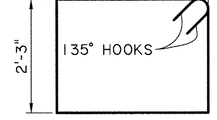

501

(2½"ø PIN)

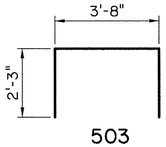

503

(2½"ø PIN)



NOTES:

FOR GENERAL NOTES SEE "GENERAL NOTES" SHEET.

FOR PILE CUTOFF ELEVATIONS AND PILE LOADS SEE PILE DATA TABLE SHEET.

SHEET NUMBER 219

EAST BATON ROUGE PARISH | BATON ROUGE CITY | 12-CS-HC-0043 PROJECT

DESIGNED PG | CHECKED GGM | DETAILED S.J.A. | CHECKED PG | DATE | SHEET

REVISION OR CHANGE ORDER DESCRIPTION | BY | NO. | DATE

INTERMEDIATE BENT 2 DETAILS
SOUTH BOUND
MALL OF LA BOULEVARD BRIDGE
MALL OF LOUISIANA BOULEVARD

EVANS-GRAVES ENGINEERS

9/10/2020

F:\00_PROJECTS\12-500\Sheet_Sets\Construction - Revised\P2 Sheet 219 bent_picardy_sb_1.dgn

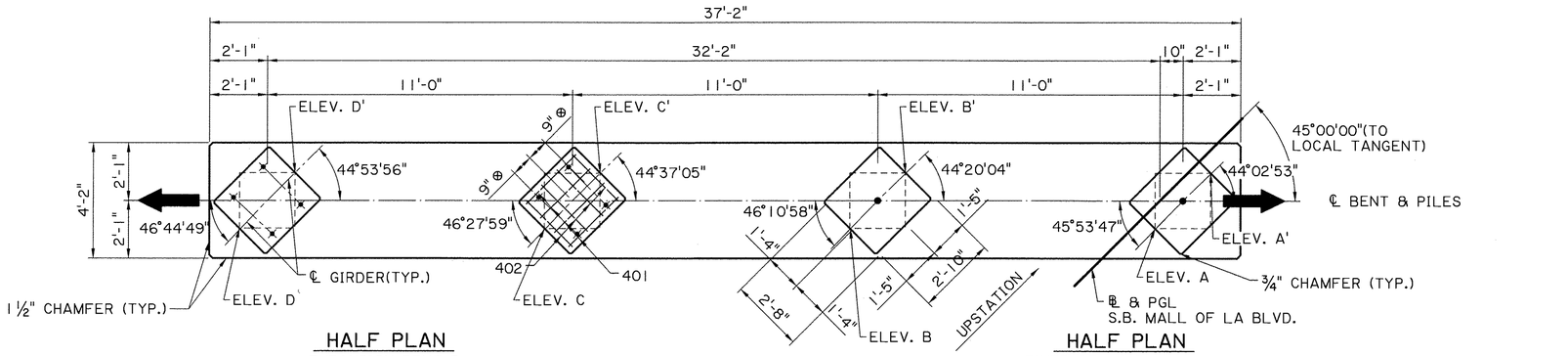

HALF PLAN
EXPANSION BENT 5

HALF PLAN
FIXED BENTS 3, 4, 6, &7

⊗ MEASURED ALONG ℄ GIRDER

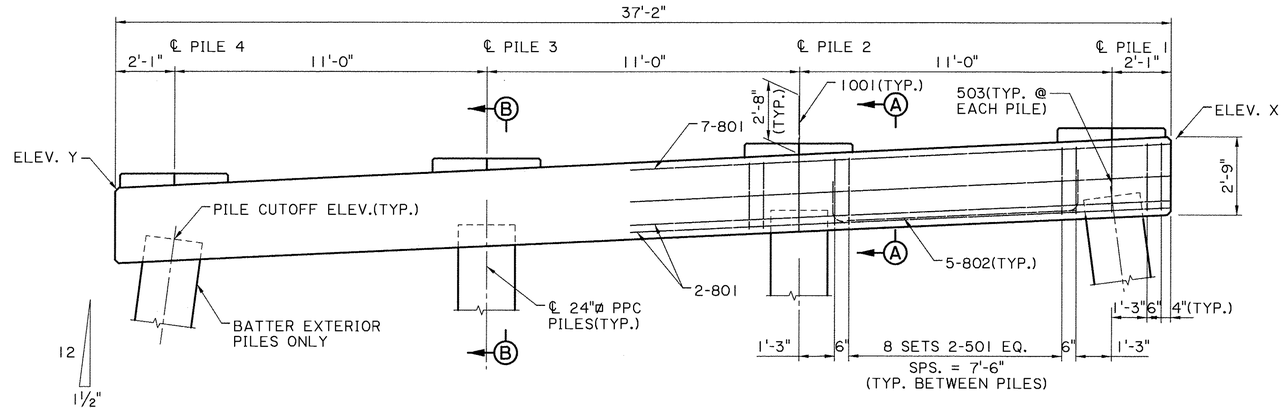

HALF ELEVATION
EXPANSION BENT 5

HALF ELEVATION
FIXED BENTS 3, 4, 6, & 7

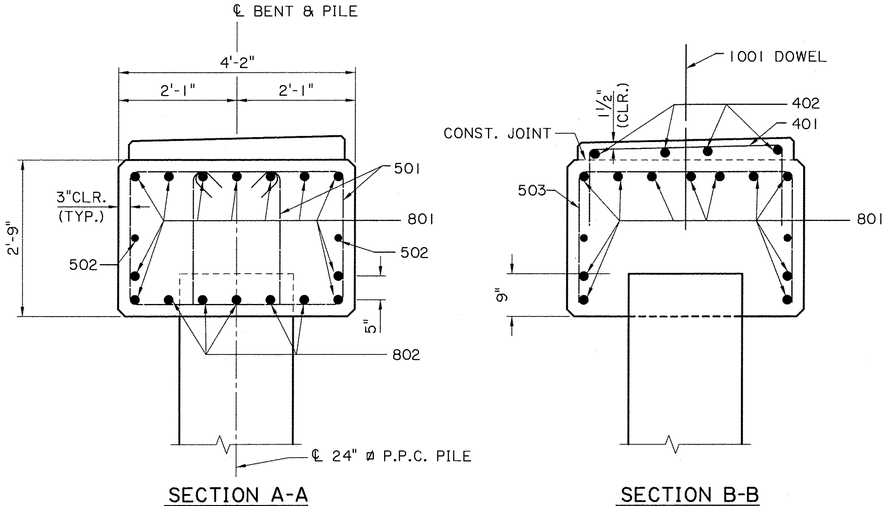

SECTION A-A
SCALE ¾" = 1'-0"

SECTION B-B
SCALE ¾" = 1'-0"

BENT ELEVATIONS										
BENT NO.	A	A'	B	B'	C	C'	D	D'	X	Y
3	27.49'	27.52'	27.22'	27.25'	26.93'	26.96'	26.64'	26.68'	27.07'	26.22'
4	27.79'	27.79'	27.58'	27.59'	27.36'	27.37'	27.13'	27.14'	27.37'	26.71'
5	27.66'	27.64'	27.51'	27.49'	27.35'	27.34'	27.20'	27.19'	27.22'	26.77'
6	27.10'	27.05'	27.02'	26.98'	26.92'	26.90'	26.82'	26.80'	26.63'	26.34'
7	26.11'	26.05'	26.10'	26.04'	26.08'	26.02'	26.04'	25.99'	25.63'	25.57'

ESTIMATED QUANTITIES (ONE BENT)

BAR	NO.	UNIT LENGTH	TOTAL LENGTH	LOCATION
1001	4	3'-8"	14'-8"	DOWELS IN PILE CAP AND RISER
TOTAL NO. 10 BARS = 14'-8" = 63 LBS.				
801	11	36'-8"	403'-4"	LONGIT. IN CAP
802	15	11'-0"	165'-0"	LONGIT. IN CAP BETWEEN PILES
TOTAL NO. 8 BARS = 568'-4" = 1517 LBS.				
501	68	10'-7"	719'-8"	STIRRUPS
502	2	36'-8"	73'-4"	LONGIT. IN CAP
503	4	8'-2"	32'-8"	STIRRUPS @ PILES
TOTAL NO.5 BARS = 825'-8" = 861 LBS.				
401	16	5'-3"	84'-0"	RISERS
402	16	2'-5"	38'-8"	RISERS
TOTAL NO. 4 BARS = 122'-8" = 82 LBS.				

△ TOTAL DEFORMED REINFORCING STEEL	2523 LBS.
CLASS 6A4000 CONCRETE	15.90 CU. YDS.
⊙ * STRUCTURAL STEEL	84 LBS.

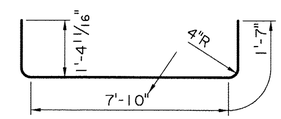

802
(6"ø PIN)

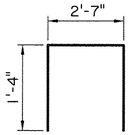

401
(2"ø PIN)

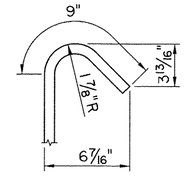

135° HOOK FOR 501
(2½"ø PIN)

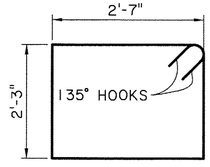

501
(2½"ø PIN)

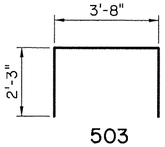

503
(2½"ø PIN)

△ INCLUDE 63 LBS. (4 DOWELS 1001 AT 3'-8" EA.) FOR FIXED BENTS.
* FOR ESTIMATION PURPOSES ONLY. TO BE INCLUDED UNDER ITEM 6020600, "STRUCTURAL STEEL," LUMP SUM.
⊙ FOR EXPANSION BENTS ONLY.

NOTES:

FOR GENERAL NOTES SEE "GENERAL NOTES" SHEET.
FOR PILE CUTOFF ELEVATIONS AND PILE LOADS SEE PILE DATA TABLE SHEET.

STATE OF LOUISIANA
GERALD G. MENARD
License No. 20437
PROFESSIONAL ENGINEER
IN
CIVIL ENGINEERING
9/10/2020

SHEET NUMBER 220
PARISH: EAST BATON ROUGE
CITY: BATON ROUGE
PROJECT: 12-CS-HC-0043
DESIGNED PG
CHECKED GGM
DETAILED S.J.A.
CHECKED PG
DATE
SHEET
NO. | DATE | BY | REVISION OR CHANGE ORDER DESCRIPTION

INTERMEDIATE BENT 3-7 DETAILS
SOUTH BOUND
MALL OF LA BOULEVARD BRIDGE
MALL OF LOUISIANA BOULEVARD

EVANS-GRAVES ENGINEERS

F:\00_PROJECTS\12-500\Sheet_Sets\Construction - Revised\P2 Sheet 220 bent_picardy_sb_2.dgn 9/10/2020 09:05

9/10/2020 13:43
F:\00_PROJECTS\12-500\Sheet_Sets\Construction - Revised\P2 Sheet 221 Framing Plan Picardy.dgn

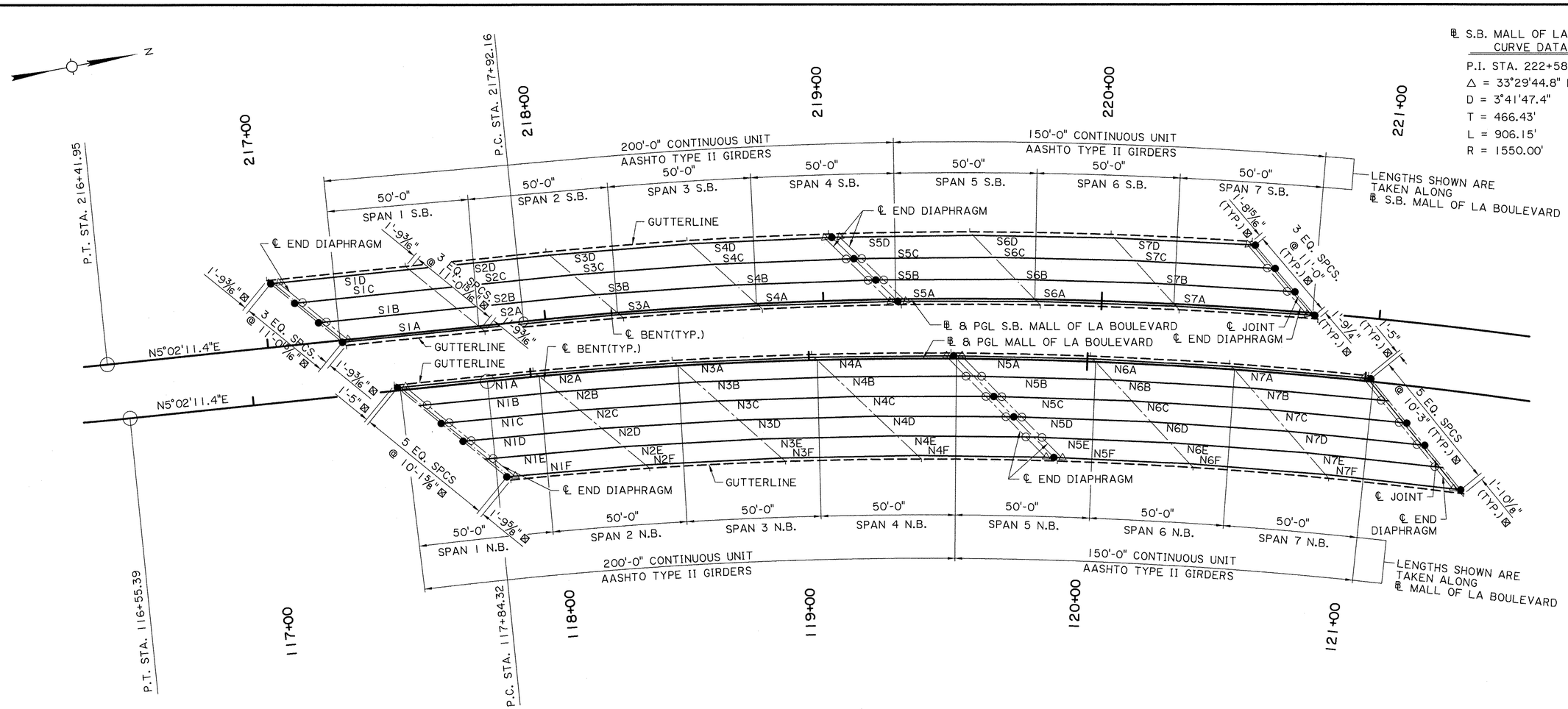

FRAMING PLAN
SCALE: 1"=20'

LEGEND:

△ THREADED INSERT INTERIOR SIDE ONLY

○ 2" ϕ CAST-IN-PLACE HOLE

● ANCHOR BOLT ASSEMBLY

⊠ = DISTANCE ALONG ℄ JOINT OR BENT

℄ MALL OF LA BOULEVARD CURVE DATA
P.I. STA. = 122+50.75
△ = 33°29'44.8" RT.
D = 3°41'47.4"
T = 466.43'
L = 906.15'
R = 1550.00'

GERALD G. MENARD
License No. 20437
PROFESSIONAL ENGINEER
IN
CIVIL ENGINEERING
9/10/2020

SHEET NUMBER 221
PARISH: EAST BATON ROUGE
CITY: BATON ROUGE
PROJECT: 12-CS-HC-0043
DESIGNED PG
CHECKED GGM
DETAILED S.J.A
CHECKED PG
DATE
SHEET
NO. DATE REVISION OR CHANGE ORDER DESCRIPTION BY

FRAMING PLAN
NORTH BOUND & SOUTH BOUND
MALL OF LA BOULEVARD BRIDGE
MALL OF LOUISIANA BOULEVARD

EVANS-GRAVES ENGINEERS

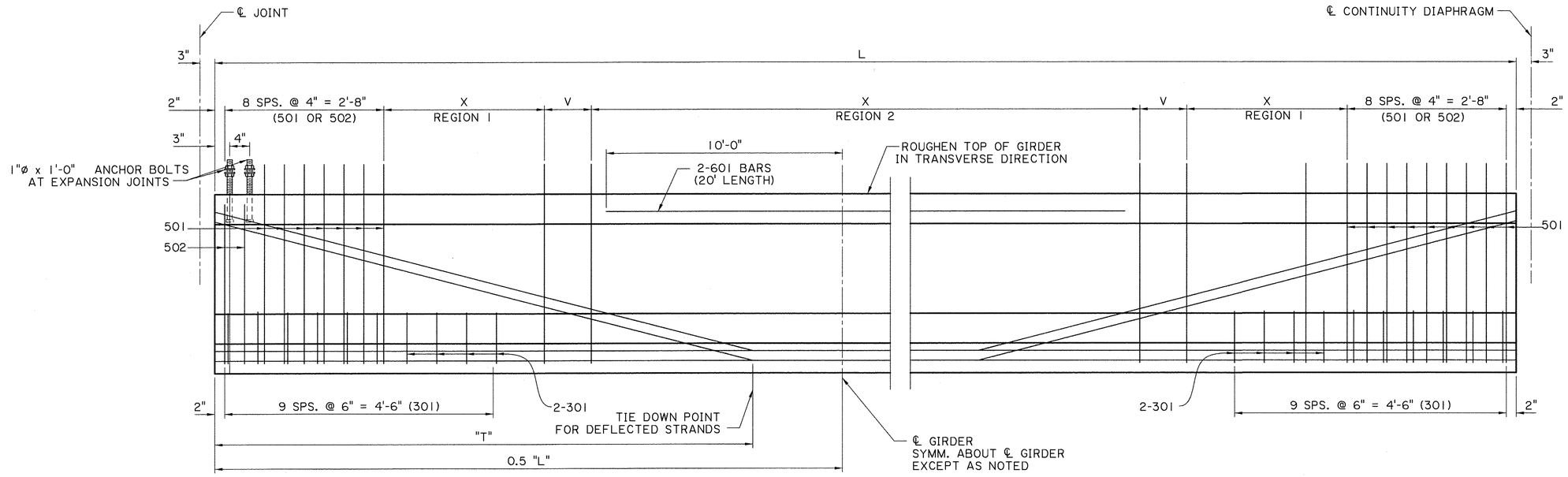

TYPICAL GIRDER ELEVATION

N.T.S.

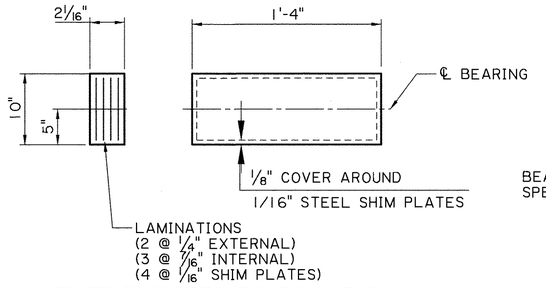

TYPE II GIRDER BEARING PAD

(FIXED & EXPANSION)

BEARING PAD NOTES:
SPECIFIED SHEAR MODULUS IS 0.150 KSI

● FULLY BONDED STRANDS

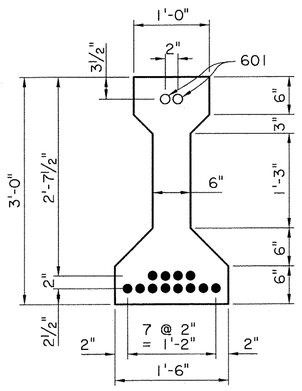

TYPE II GIRDER (II12) MID-SPAN STRAND PATTERN

(SCALE: 1 1/2"=1'-0")

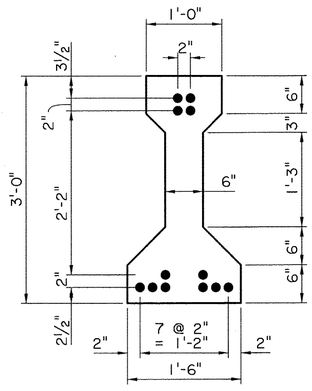

TYPE II GIRDER (II12) END STRAND PATTERN

(SCALE: 1 1/2"=1'-0")

AASHTO GIRDER TYPE II NOTES:

ALL DIMENSIONS GIVEN IN PLAN & ELEVATION VIEWS ARE SHOWN ALONG CENTERLINE OF GIRDER.

ALL PRESTRESSED TYPE II GIRDER STRANDS ARE 0.60" NOMINAL DIAMETER, UNCOATED, SEVEN-WIRE STRANDS, GRADE 270, CONFORMING TO ASTM DESIGNATION A 416M. THE STRANDS SHALL BE LOW-RELAXATION WITH AN INITIAL APPLIED FORCE OF 43,950 POUNDS.

ALL TYPE II GIRDERS SHALL BE LDOTD CLASS P2 CONCRETE WITH A MINIMUM COMPRESSIVE STRENGTH OF f'c = 8.5 KSI AND SHALL HAVE A MINIMUM COMPRESSIVE STRENGTH AT RELEASE OF f'ci = 6.5 KSI.

STRANDS IN TOP OF GIRDER (2,000 LB. PULL) AND 402 BARS SHALL BE PROVIDED AS PER SHT. 283. FOR DETAILS AT THE END OF GIRDERS, REINFORCING STEEL, GENERAL NOTES AND INFORMATION NOT SHOWN, SEE MISC. SPAN AND GIRDER DETAILS, SHEETS 280-284.

GIRDER DEAD LOAD REACTIONS INCLUDE 25 PSF FUTURE WEARING SURFACE AND 10 PSF BETWEEN GIRDERS FOR STAY-IN-PLACE FORMS.

STATE OF LOUISIANA
GERALD G. MENARD
License No. 20437
PROFESSIONAL ENGINEER
IN
CIVIL ENGINEERING
9/23/2020

SHEET NUMBER 222

PARISH: EAST BATON ROUGE
CITY: BATON ROUGE
PROJECT: 12-CS-HC-0043

DESIGNED PG
CHECKED GGM
DETAILED M.L.R.
CHECKED PG
DATE
SHEET

REVISION OR CHANGE ORDER DESCRIPTION | BY | DATE | NO.

GIRDER DETAILS
NORTH BOUND & SOUTH BOUND
MALL OF LA BOULEVARD BRIDGE
MALL OF LOUISIANA BOULEVARD

EVANS-GRAVES ENGINEERS

F:\00_PROJECTS\12-500\Sheet_Sets\Construction - Revised\P2 Sheet 222 Girder Design Picardy.dgn 9/23/2020 08:31

F:\00_PROJECTS\12-500\Sheet_Sets\Construction - Revised\P2 Sheet 223 Girder Design Table Picardy.dgn 9/10/2020 13:43

NORTHBOUND BRIDGE

SPAN NO.	GIRDER DESIGNATION	GIRDER TYPE	STRAND PATTERN DESIGNATION	GIRDER LENGTH "L"	GIRDER TIE DOWN POINTS "T"	CONCRETE COMPRESSIVE STRENGTH RELEASE F'ci (PSI)	CONCRETE COMPRESSIVE STRENGTH FINAL F'c (PSI)	ESTIMATED CAMBER *	DEFLECTION	DEAD LOAD REACTION (k) ⊙	VARIABLE DIMENSION "v"	STIRRUP SIZE AND SPACING REGION 1 X	REGION 1 S	REGION 1 B	REGION 2 X	REGION 2 S	REGION 2 B
SPAN 1	N1A	TYPE II	II12	49'-5 1/2"	19'-9 3/8"	6,500	8,500	1 3/16"	5/16"	71.2	10 3/4"	8'-0"	8"	501	26'-0"	1'-0"	501
	N1B	TYPE II	II12	49'-5 3/8"	19'-9 3/8"	6,500	8,500	1 3/16"	3/8"	74.7	10 11/16"	8'-0"	8"	501	26'-0"	1'-0"	501
	N1C	TYPE II	II12	49'-5 1/4"	19'-9 1/4"	6,500	8,500	1 3/16"	3/8"	74.7	10 5/8"	8'-0"	8"	501	26'-0"	1'-0"	501
	N1D	TYPE II	II12	49'-5 1/4"	19'-9 1/4"	6,500	8,500	1 3/16"	3/8"	74.7	10 5/8"	8'-0"	8"	501	26'-0"	1'-0"	501
	N1E	TYPE II	II12	49'-5 1/8"	19'-9 1/4"	6,500	8,500	1 3/16"	3/8"	74.7	10 9/16"	8'-0"	8"	501	26'-0"	1'-0"	501
	N1F	TYPE II	II12	49'-5 1/8"	19'-9 1/4"	6,500	8,500	1 3/16"	5/16"	71.2	10 9/16"	8'-0"	8"	501	26'-0"	1'-0"	501
SPAN 2-6	" "A	TYPE II	II12	49'-6 3/8"	19'-9 3/4"	6,500	8,500	1 3/16"	5/16"	71.2	11 1/4"	8'-0"	8"	501	26'-0"	1'-0"	501
	" "B	TYPE II	II12	49'-3 5/8"	19'-8 5/8"	6,500	8,500	1 3/16"	3/8"	74.7	9 13/16"	8'-0"	8"	501	26'-0"	1'-0"	501
	" "C	TYPE II	II12	49'-0 3/4"	19'-7 1/2"	6,500	8,500	1 3/16"	3/8"	74.7	8 7/16"	8'-0"	8"	501	26'-0"	1'-0"	501
	" "D	TYPE II	II12	48'-10"	19'-6 3/8"	6,500	8,500	1 3/16"	3/8"	74.7	7 1/16"	8'-0"	8"	501	26'-0"	1'-0"	501
	" "E	TYPE II	II12	48'-7 1/4"	19'-5 1/4"	6,500	8,500	1 3/16"	3/8"	74.7	11 11/16"	8'-0"	8"	501	25'-0"	1'-0"	501
	" "F	TYPE II	II12	48-4 1/2"	19'-4 1/4"	6,500	8,500	1 3/16"	5/16"	71.2	10 5/16"	8'-0"	8"	501	25'-0"	1'-0"	501
SPAN 7	N6A	TYPE II	II12	49'-5 5/8"	19'-9 1/2"	6,500	8,500	1 3/16"	5/16"	71.2	10 3/16"	8'-0"	8"	501	26'-0"	1'-0"	501
	N6B	TYPE II	II12	49'-2 7/8"	19'-8 3/8"	6,500	8,500	1 3/16"	3/8"	74.7	9 7/16"	8'-0"	8"	501	26'-0"	1'-0"	501
	N6C	TYPE II	II12	49'-0"	19'-7 1/4"	6,500	8,500	1 3/16"	3/8"	74.7	8"	8'-0"	8"	501	26'-0"	1'-0"	501
	N6D	TYPE II	II12	48'-9 1/4"	19'-6 1/8"	6,500	8,500	1 3/16"	3/8"	74.7	6 5/8"	8'-0"	8"	501	26'-0"	1'-0"	501
	N6E	TYPE II	II12	48'-6 1/2"	19'-5"	6,500	8,500	1 3/16"	3/8"	74.7	11 1/4"	8'-0"	8"	501	25'-0"	1'-0"	501
	N6F	TYPE II	II12	48-3 3/4"	19'-3 7/8"	6,500	8,500	1 3/16"	5/16"	71.2	9 7/8"	8'-0"	8"	501	25'-0"	1'-0"	501

SOUTHBOUND BRIDGE

SPAN NO.	GIRDER DESIGNATION	GIRDER TYPE	STRAND PATTERN DESIGNATION	GIRDER LENGTH "L"	GIRDER TIE DOWN POINTS "T"	CONCRETE COMPRESSIVE STRENGTH RELEASE F'ci (PSI)	CONCRETE COMPRESSIVE STRENGTH FINAL F'c (PSI)	ESTIMATED CAMBER *	DEFLECTION	DEAD LOAD REACTION (k) ⊙	VARIABLE DIMENSION "v"	STIRRUP SIZE AND SPACING REGION 1 X	REGION 1 S	REGION 1 B	REGION 2 X	REGION 2 S	REGION 2 B
SPAN 1	S1A	TYPE II	II12	49'-5 1/4"	19'-9 1/4"	6,500	8,500	1 3/16"	3/8"	58.5	10 5/8"	8'-0"	8"	501	26'-0"	1'-0"	501
	S1B	TYPE II	II12	49'-5 1/4"	19'-9 1/4"	6,500	8,500	1 3/16"	3/8"	61.4	10 5/8"	8'-0"	8"	501	26'-0"	1'-0"	501
	S1C	TYPE II	II12	49'-5 1/4"	19'-9 1/4"	6,500	8,500	1 3/16"	3/8"	61.4	10 5/8"	8'-0"	8"	501	26'-0"	1'-0"	501
	S1D	TYPE II	II12	49'-5 1/4"	19'-9 1/4"	6,500	8,500	1 3/16"	3/8"	58.5	10 5/8"	8'-0"	8"	501	26'-0"	1'-0"	501
SPAN 2	S2A	TYPE II	II12	49'-5 7/8"	19'-9 1/2"	6,500	8,500	1 3/16"	3/8"	58.5	10 15/16"	8'-0"	8"	501	26'-0"	1'-0"	501
	S2B	TYPE II	II12	49'-8 1/2"	19'-10 5/8"	6,500	8,500	1 3/16"	3/8"	61.4	6 1/4"	8'-0"	8"	501	27'-0"	1'-0"	501
	S2C	TYPE II	II12	49'-11 1/4"	19'-11 3/4"	6,500	8,500	1 3/16"	3/8"	61.4	7 5/8"	8'-0"	8"	501	27'-0"	1'-0"	501
	S2D	TYPE II	II12	50'-2"	20'-0 3/4"	6,500	8,500	1 3/16"	3/8"	58.5	9"	8'-0"	8"	501	27'-0"	1'-0"	501
SPAN 3-6	" "A	TYPE II	II12	49'-5 3/4"	19'-9 1/2"	6,500	8,500	1 3/16"	3/8"	58.5	10 7/8"	8'-0"	8"	501	26'-0"	1'-0"	501
	" "B	TYPE II	II12	49'-8 3/4"	19'-10 3/4"	6,500	8,500	1 3/16"	3/8"	61.4	6 3/8"	8'-0"	8"	501	27'-0"	1'-0"	501
	" "C	TYPE II	II12	49'-11 3/4"	19'-11 7/8"	6,500	8,500	1 3/16"	3/8"	61.4	7 7/8"	8'-0"	8"	501	27'-0"	1'-0"	501
	" "D	TYPE II	II12	50'-2 3/4"	20'-1 1/8"	6,500	8,500	1 3/16"	3/8"	58.5	9 3/8"	8'-0"	8"	501	27'-0"	1'-0"	501
SPAN 7	S7A	TYPE II	II12	49'-5"	19'-9 1/4"	6,500	8,500	1 3/16"	3/8"	58.5	10 1/2"	8'-0"	8"	501	26'-0"	1'-0"	501
	S7B	TYPE II	II12	49'-8"	19'-10 3/8"	6,500	8,500	1 3/16"	3/8"	61.4	6"	8'-0"	8"	501	27'-0"	1'-0"	501
	S7C	TYPE II	II12	49'-11"	19'-11 5/8"	6,500	8,500	1 3/16"	3/8"	61.4	7 1/2"	8'-0"	8"	501	27'-0"	1'-0"	501
	S7D	TYPE II	II12	50'-2"	20'-0 3/4"	6,500	8,500	1 3/16"	3/8"	58.5	9"	8'-0"	8"	501	27'-0"	1'-0"	501

S = STIRRUP SPACING
B = STIRRUP SIZE C

NOTE:

⊙ INCLUDES 25 PSF FUTURE WEARING SURFACE.

* CONTRACTOR TO FIELD MEASURE AT TIME OF ERECTION AND NOTIFY ENGINEER OF RECORD IF ACTUAL CAMBER IS +/- 1/2" FROM ESTIMATED CAMBER.

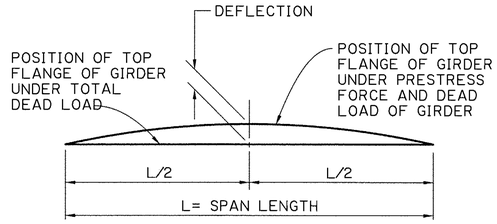

DEFLECTION OF PRESTRESSED GIRDER UNDER DEAD LOAD OF CAST-IN-PLACE CONCRETE

SHEET NUMBER 223

PARISH EAST BATON ROUGE | CITY BATON ROUGE | PROJECT 12-CS-HC-0043

DESIGNED P.G. | CHECKED GGM | DETAILED S.J.A. | CHECKED PG | DATE | SHEET

REVISION OR CHANGE ORDER DESCRIPTION | BY | NO. | DATE

GIRDER SCHEDULE
NORTHBOUND & SOUTHBOUND
MALL OF LA BOULEVARD BRIDGE
MALL OF LOUISIANA BOULEVARD

STATE OF LOUISIANA
GERALD G. MENARD
License No. 20437
PROFESSIONAL ENGINEER
IN
CIVIL ENGINEERING
9/10/2020

EVANS-GRAVES ENGINEERS

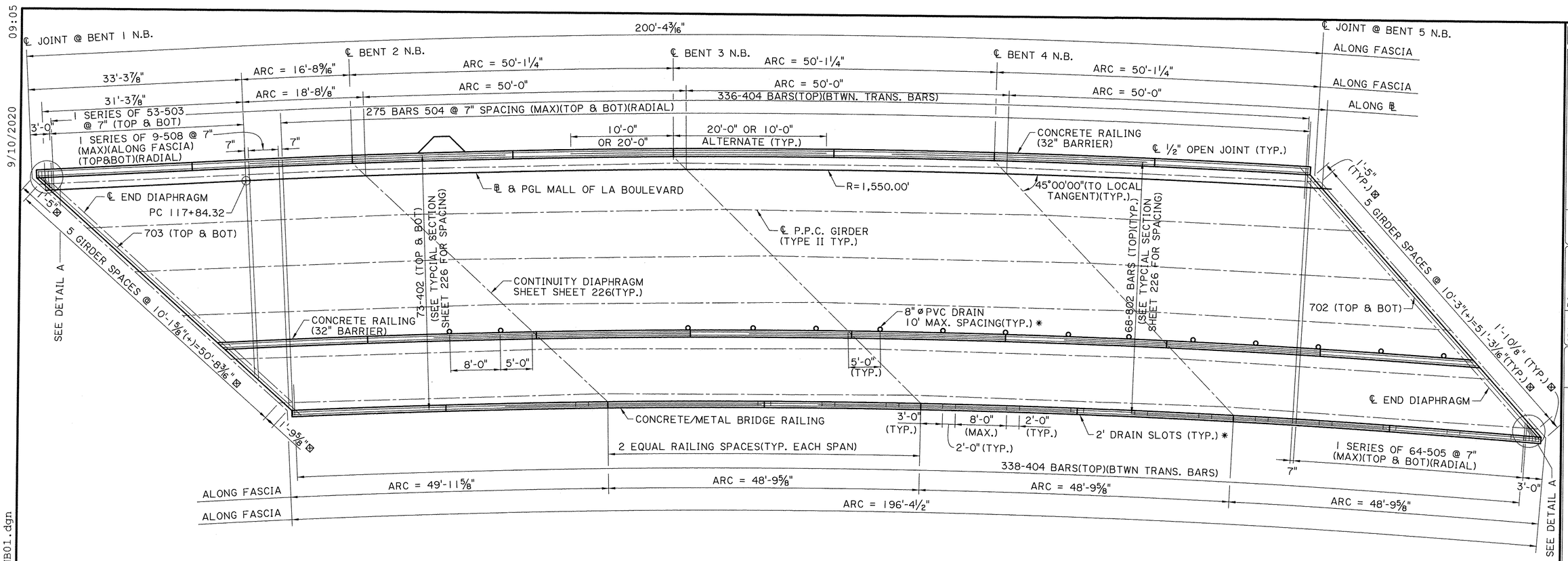

PLAN

SCALE: 1/8" = 1'-0"

⊠ = DISTANCE ALONG ℄ JOINT OR BENT. SEE FRAMING PLAN.

* = OMIT PVC DRAINS AND BARRIER SLOTS OVER SHARED-USE PATH AND NEAR END BENT AS SHOWN.

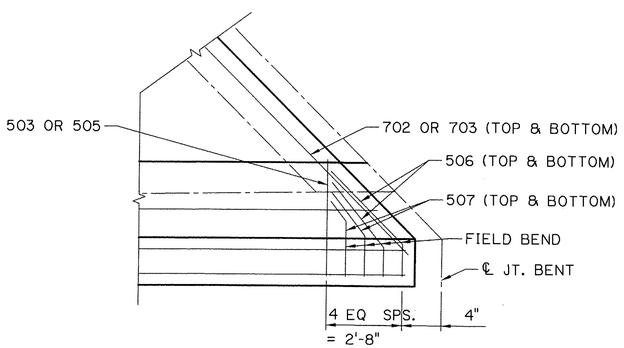

DETAIL A

** 2 BARS EACH LENGTH

⊙ INCLUDES (5) FIVE 1'-4" LAP SPLICES, ALL SPLICES TO BE STAGGERED.

△ FOR ESTIMATION PURPOSES ONLY. TO BE INCLUDED UNDER ITEM 6020600, STRUCTURAL STEEL, LUMP SUM.

CLASS 6.5A4200 CONCRETE	224.74 CU. YDS.
CONCRETE BRIDGE RAILING(32")	396.75 LIN. FT.
CONCRETE/METAL BRIDGE RAILING	195.95 LIN. FT.
STRIP SEAL JOINTS	52.63 LIN. FT.
△ STRUCTURAL STEEL	35 LBS.

ESTIMATED QUANTITIES (200' SPAN UNIT)

	BAR	NO.	SHORT BAR	VAR. (INS.)	LONG BAR	TOTAL LENGTH	LOCATION
	801	8			6'-6"	52'-0"	END DIAPHRAGMS
	802	204			30'-0"	6120'-0"	LONGIT. AT CONT. DIAPH.
	TOTAL NO. 8 BARS = 6172'-0" = 16479 LBS.						
	701	10			9'-0"	90'-0"	END DIAPHRAGMS
	702	2			56'-3"	112'-6"	SLAB AT JT. TOP & BOT.
	703	2			55'-8"	111'-4"	SLAB AT JT. TOP & BOT.
	704	10			8'-10"	88'-4"	END DIAPHRAGMS
	TOTAL NO. 7 BARS = 402'-2" = 822 LBS.						
	501	40			8'-9"	350'-0"	END DIAPHRAGMS
	502	90			8'-9"	787'-6"	CONTINUITY DIAPHRAGMS
**	503	53	3'-9"	6.981	34'-0"	2000'-9"	TRANSV. TOP & BOT. OF SLAB
	504	550			40'-0"	22000'-0"	TRANSV. TOP & BOT. OF SLAB
**	505	64	3'-5"	6.698	38'-7"	2688'-0"	TRANSV. TOP & BOT. OF SLAB
	506	8			6'-0"	48'-0"	TOP & BOT. OF SLAB @ JT.
	507	8			4'-0"	32'-0"	TOP & BOT. OF SLAB @ JT.
**	508	9	34'-7"	6.750	39'-1"	663'-0"	TRANSV. TOP & BOT. OF SLAB
	509	72			6'-4"	456'-0"	CONTINUITY DIAPHRAGMS
	510	36			3'-2"	114'-0"	CONTINUITY DIAPHRAGMS
	TOTAL NO. 5 BARS = 29139'-3" = 30392 LBS.						
	401	90			5'-10"	525'-0"	END DIAPHRAGMS
⊙	402	146			206'-4"	30124'-8"	LONGIT. IN TOP & BOT. OF SLAB
	403	135			6'-10"	922'-6"	CONTINUITY DIAPHRAGMS
	404	674			5'-0"	3370'-0"	TRANSV. TOP OF SLAB @BARRIER
	TOTAL NO. 4 BARS = 34942'-2" = 23341 LBS.						
	TOTAL DEFORMED REINFORCING STEEL						71034 LBS.

STATE OF LOUISIANA
GERALD G. MENARD
License No. 20437
PROFESSIONAL ENGINEER
IN
CIVIL ENGINEERING
9/10/2020

SHEET NUMBER 224

PARISH EAST BATON ROUGE | CITY BATON ROUGE | PROJECT 12-CS-HC-0043

DESIGNED PG | CHECKED GGM | DETAILED S.J.A. | CHECKED PG | DATE | SHEET 1 OF 2

NO. | DATE | BY | REVISION OR CHANGE ORDER DESCRIPTION

SPAN DETAILS NORTH BOUND SPANS 1-4

MALL OF LA BOULEVARD BRIDGE

MALL OF LOUISIANA BOULEVARD

EVANS-GRAVES ENGINEERS

9:05
9/10/2020
F:\00_PROJECTS\12-500\Sheet_Sets\Construction - Revised\P2 Sheet 224 Unit_NB01.dgn

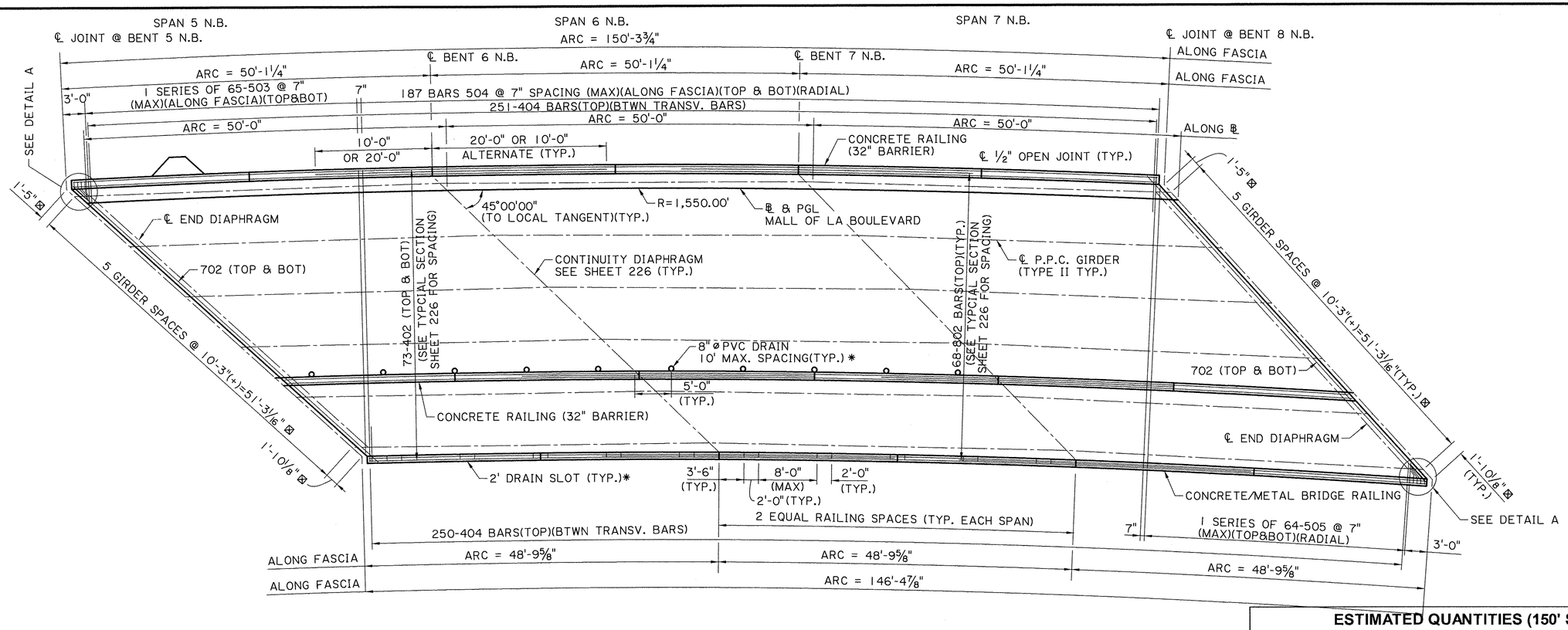

⊠ = DISTANCE ALONG ℄ JOINT OR BENT. SEE FRAMING PLAN.

* = OMIT DRAINS SPAN 7.

PLAN

SCALE: ⅛" = 1'-0"

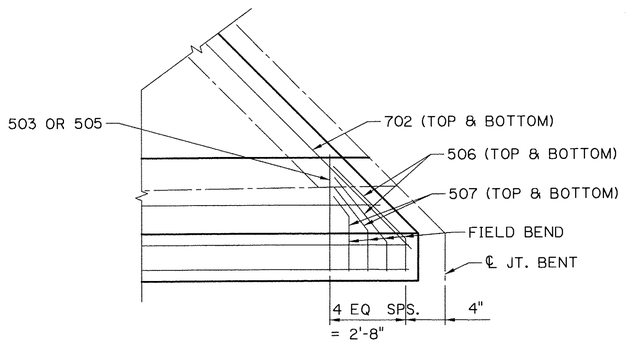

DETAIL A

** 2 BARS EACH LENGTH

⊙ INCLUDES (3) THREE 1'-4" LAP SPLICES, ALL SPLICES TO BE STAGGERED.

△ FOR ESTIMATION PURPOSES ONLY. TO BE INCLUDED UNDER ITEM 6020600, STRUCTURAL STEEL, LUMP SUM.

STATE OF LOUISIANA
GERALD G. MENARD
License No. 20437
PROFESSIONAL ENGINEER
IN
CIVIL ENGINEERING
9/10/2020

ESTIMATED QUANTITIES (150' SPAN UNIT)

	BAR	NO.	SHORT BAR	VAR. (INS.)	LONG BAR	TOTAL LENGTH	LOCATION
	801	8			6'-6"	52'-0"	END DIAPHRAGMS
	802	136			30'-0"	4080'-0"	LONGIT. AT CONT. DIAPH.
	TOTAL NO. 8 BARS = 4132'-0" = 11032 LBS.						
	701	20			9'-0"	180'-0"	END DIAPHRAGMS
	702	4			56'-3"	225'-0"	SLAB AT JT. TOP & BOT.
	TOTAL NO. 7 BARS = 405'-0" = 828 LBS.						
	501	40			8'-9"	350'-0"	END DIAPHRAGMS
	502	60			8'-9"	525'-0"	CONTINUITY DIAPHRAGMS
**	503	65	3'-9"	6.578	38'-10"	2767'-11"	TRANSV. TOP & BOT. OF SLAB
	504	374			40'-0"	14960'-0"	TRANSV. TOP & BOT. OF SLAB
**	505	64	3'-5"	6.698	38'-7"	2688'-0"	TRANSV. TOP & BOT. OF SLAB
	506	8			6'-0"	48'-0"	TOP & BOT. OF SLAB @ JT.
	507	8			4'-0"	32'-0"	TOP & BOT. OF SLAB @ JT.
	509	48			6'-4"	304'-0"	CONTINUITY DIAPHRAGMS
	510	24			3'-2"	76'-0"	CONTINUITY DIAPHRAGMS
	TOTAL NO. 5 BARS = 21750'-11" = 22686 LBS.						
	401	90			5'-10"	525'-0"	END DIAPHRAGMS
⊙	402	146			153'-8"	22435'-4"	LONGIT. IN TOP & BOT. OF SLAB
	403	90			6'-10"	615'-0"	CONTINUITY DIAPHRAGMS
	404	501			5'-0"	2505'-0"	TRANSV. TOP OF SLAB @BARRIER
	TOTAL NO. 4 BARS = 26080'-4" = 17422 LBS.						

TOTAL DEFORMED REINFORCING STEEL	**51968 LBS.**
CLASS 6.5A4200 CONCRETE	**168.27 CU. YDS.**
CONCRETE BRIDGE RAILING(32")	**298.11 LIN. FT.**
CONCRETE/METAL BRIDGE RAILING	**145.93 LIN. FT.**
STRIP SEAL JOINTS	**106.38 LIN. FT.**
△ **STRUCTURAL STEEL**	**35 LBS.**

SHEET NUMBER 225

PARISH EAST BATON ROUGE | CITY BATON ROUGE | PROJECT 12-CS-HC-0043

DESIGNED PG | CHECKED GGM | DETAILED SJA | CHECKED PG | DATE | SHEET 1 OF 2

REVISION OR CHANGE ORDER DESCRIPTION | BY | NO. | DATE

SPAN DETAILS
NORTH BOUND SPANS 5-7
MALL OF LA BOULEVARD BRIDGE
MALL OF LOUISIANA BOULEVARD

EVANS-GRAVES ENGINEERS

09:06
9/10/2020
F:\00_PROJECTS\12-500\Sheet_Sets\Construction - Revised\P2 Sheet 225 Unit_NB02.dgn

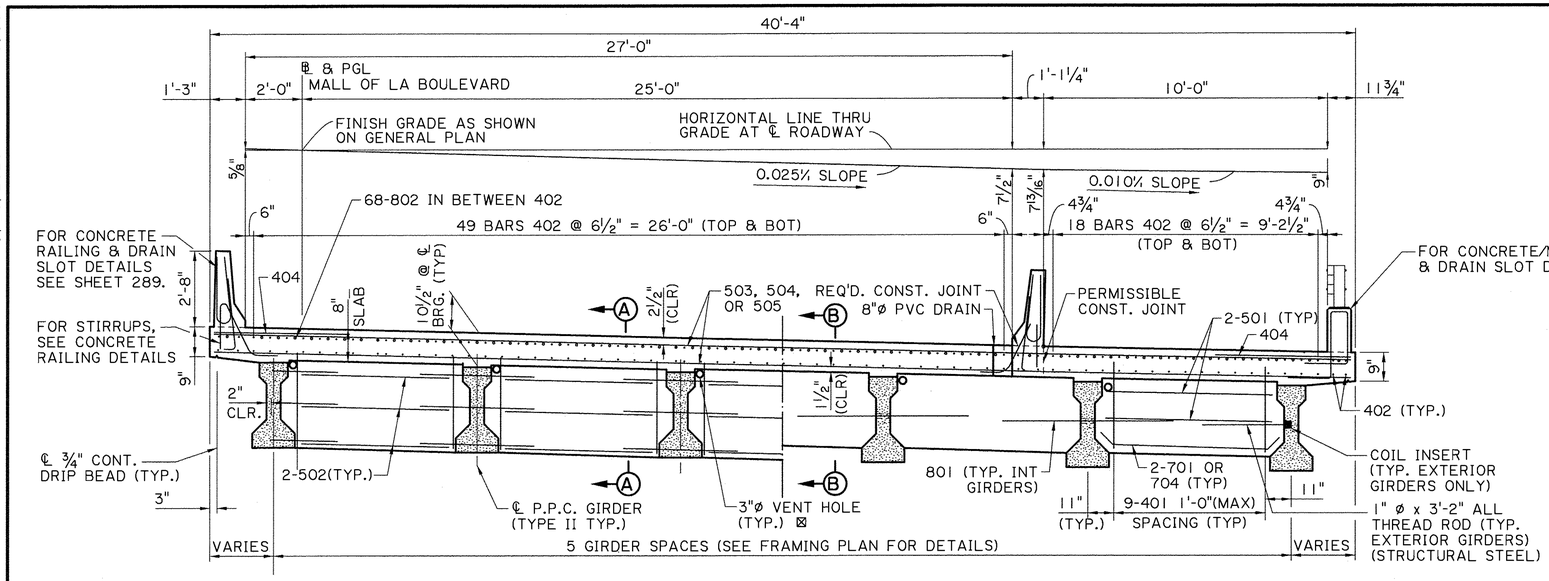

TYPICAL HALF SECTION
CONTINUITY DIAPHRAGM

TYPICAL SECTION
SCALE: ⅜" = 1'-0"

TYPICAL HALF SECTION
END DIAPHRAGM

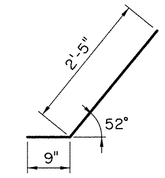

510
(3¾"ø PIN)

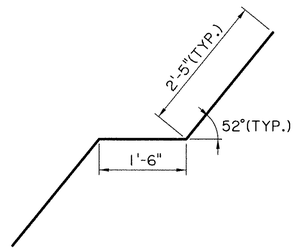

509
(3¾"ø PIN)

⊠ 3" VENT HOLE IN EACH BAY END AND CONTINUITY DIAPRHAGMS

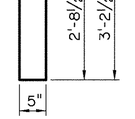

401 & 403
(2"ø PIN)

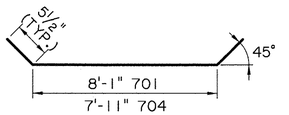

701 & 704
(5¼"ø PIN)

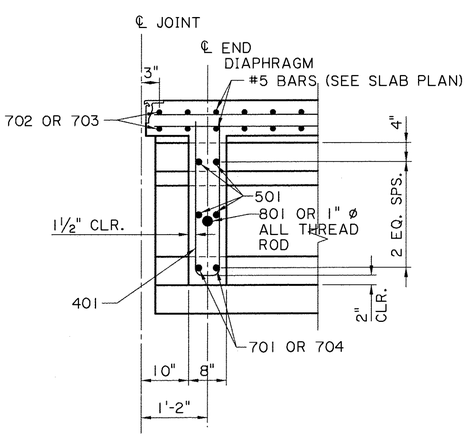

SECTION B-B
SCALE: ¾" = 1'-0"

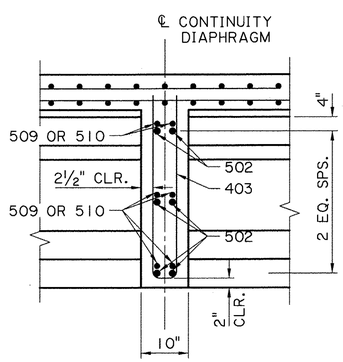

SECTION A-A
SCALE: ¾" = 1'-0"

PART PLAN
CONTINUITY DIAPHRAGM
SCALE: ¾" = 1'-0"

GERALD G. MENARD
License No. 20437
PROFESSIONAL ENGINEER
IN
CIVIL ENGINEERING
9/10/2020

SHEET NUMBER 226

EAST BATON ROUGE PARISH | BATON ROUGE CITY | 12-CS-HC-0043 PROJECT

DESIGNED PG | DETAILED SAJ | DATE | SHEET
CHECKED JW | CHECKED JW

NO. | DATE | REVISION OR CHANGE ORDER DESCRIPTION | BY

SPAN DETAILS
NORTH BOUND SPANS 1-7
MALL OF LA BOULEVARD BRIDGE
MALL OF LOUISIANA BOULEVARD

EVANS-GRAVES ENGINEERS

09:06
9/10/2020
F:\00_PROJECTS\12-500\Sheet_Sets\Construction - Revised\P2 Sheet 226 deck-section_nb.dgn

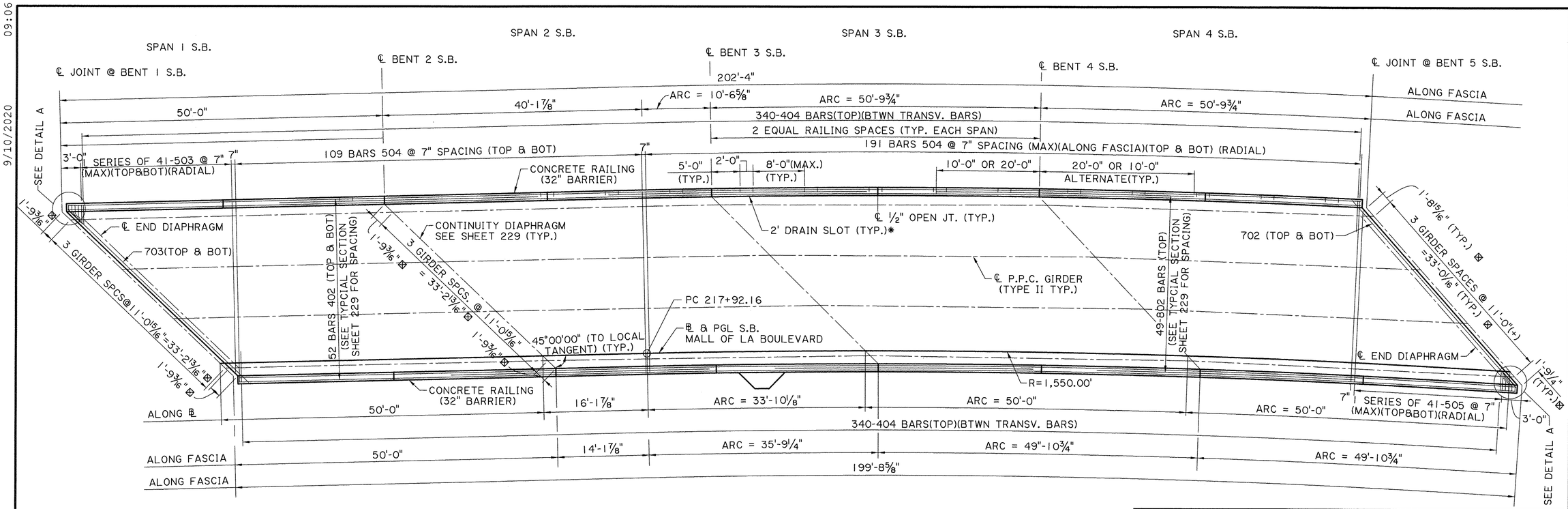

⊠ = DISTANCE ALONG ℄ JOINT OR BENT. SEE FRAMING PLAN.

✱ = OMIT DRAINS OVER SHARED-USE PATH AND NEAR END BENT AS SHOWN.

PLAN

SCALE: ⅛" = 1'-0"

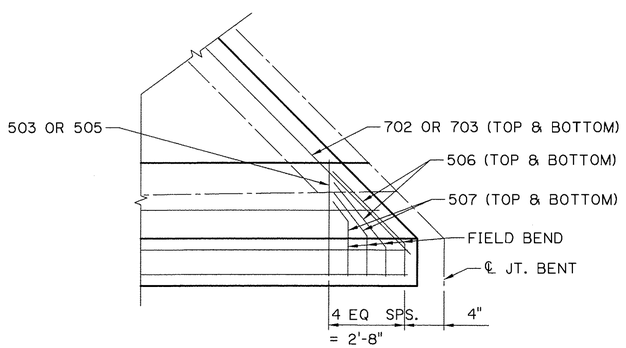

DETAIL A

✱✱ 2 BARS EACH LENGTH

⊙ INCLUDES (5) FIVE 1'-4" LAP SPLICES, ALL SPLICES TO BE STAGGERED.

△ FOR ESTIMATION PURPOSES ONLY. TO BE INCLUDED UNDER ITEM 6020600, STRUCTURAL STEEL, LUMP SUM.

STATE OF LOUISIANA
GERALD G. MENARD
License No. 20457
PROFESSIONAL ENGINEER
IN
CIVIL ENGINEERING
9/10/2020

ESTIMATED QUANTITIES (200' SPAN UNIT)

	BAR	NO.	SHORT BAR	VAR. (INS.)	LONG BAR	TOTAL LENGTH	LOCATION
	801	4			6'-6"	26'-0"	END DIAPHRAGMS
	802	147			30'-0"	4410'-0"	LONGIT. AT CONT. DIAPH.
	TOTAL NO. 8 BARS = 4436'-0" = 11844 LBS.						
	701	12			9'-9"	117'-0"	END DIAPHRAGMS
	702	2			38'-6"	77'-0"	SLAB AT JT. TOP & BOT.
	703	2			38'-10"	77'-8"	SLAB AT JT. TOP & BOT.
	TOTAL NO. 7 BARS = 271'-8" = 555 LBS.						
	501	24			9'-6"	228'-0"	END DIAPHRAGMS
	502	54			9'-6"	513'-0"	CONTINUITY DIAPHRAGMS
✱✱	503	41	3'-9"	7.050	27'-3"	1271'-0"	TRANSV. TOP & BOT. OF SLAB
	504	600			28'-2"	16900'-0"	TRANSV. TOP & BOT. OF SLAB
✱✱	505	41	3'-9"	7.050	27'-3"	1271'-0"	TRANSV. TOP & BOT. OF SLAB
	506	8			6'-0"	48'-0"	TOP & BOT. OF SLAB @ JT.
	507	8			4'-0"	32'-0"	TOP & BOT. OF SLAB @ JT.
	508	36			6'-4"	228'-0"	CONTINUITY DIAPHRAGMS
	509	36			3'-2"	114'-0"	CONTINUITY DIAPHRAGMS
	TOTAL NO. 5 BARS = 20605'-0" = 21491 LBS.						
	401	60			5'-10"	350'-0"	END DIAPHRAGMS
⊙	402	104			208'-5"	21675'-4"	LONGIT. IN TOP & BOT. OF SLAB
	403	90			6'-10"	615'-0"	CONTINUITY DIAPHRAGMS
	404	680			5'-0"	3400'-0"	TRANSV. TOP OF SLAB @BARRIER
	TOTAL NO. 4 BARS = 26040'-4" = 17395 LBS.						

	TOTAL DEFORMED REINFORCING STEEL	51285 LBS.
	CLASS 6.5A4200 CONCRETE	161.41 CU. YDS.
	CONCRETE BRIDGE RAILING(32")	401.83 LIN. FT.
	STRIP SEAL JOINTS	36.77 LIN. FT.
△	STRUCTURAL STEEL	35 LBS.

SHEET NUMBER 227

PARISH: EAST BATON ROUGE | CITY: BATON ROUGE | PROJECT: 12-CS-HC-0043

DESIGNED PG | CHECKED GGM | DETAILED S.J.A. | CHECKED PG | DATE | SHEET 1 OF 2

NO.	DATE	REVISION OR CHANGE ORDER DESCRIPTION	BY

SPAN DETAILS
SOUTH BOUND SPANS I-4
MALL OF LA BOULEVARD BRIDGE

MALL OF LOUISIANA BOULEVARD

EVANS-GRAVES ENGINEERS

09:06
9/10/2020
F:\00_PROJECTS\12-500\Sheet_Sets\Construction - Revised\P2 Sheet 227 Unit_SB01.dgn

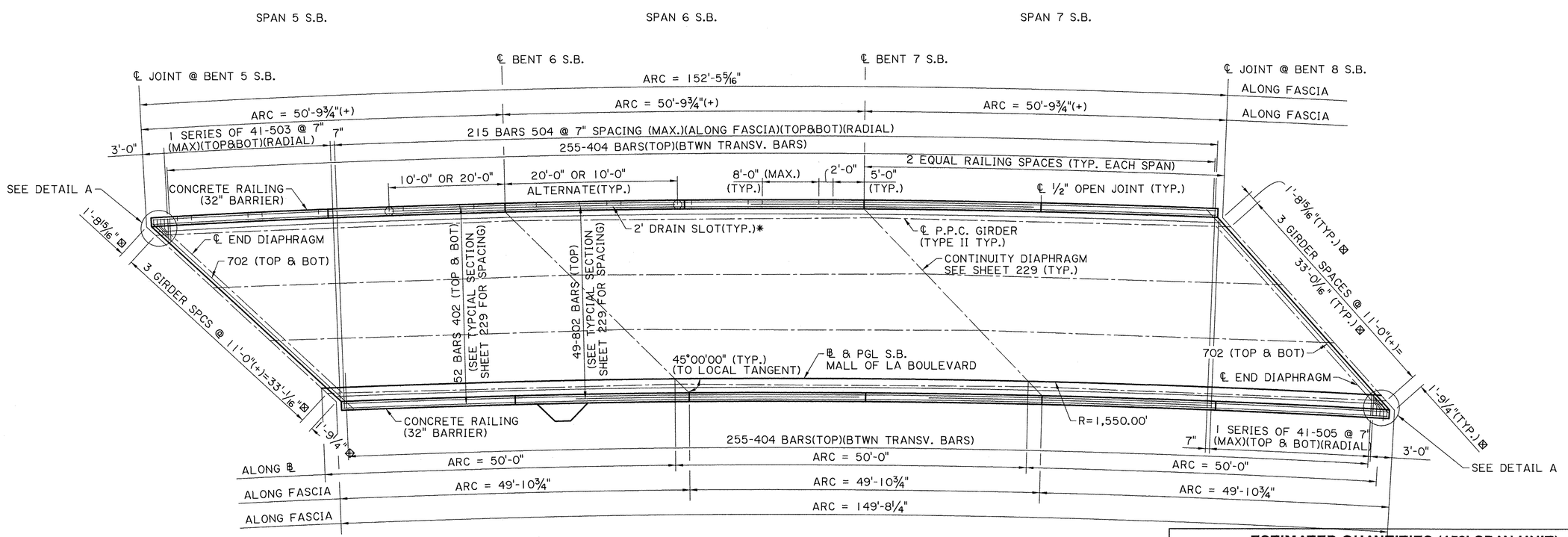

PLAN

SCALE: 1/8" = 1'-0"

⊠ = DISTANCE ALONG ℄ JOINT OR BENT. SEE FRAMING PLAN.

✱ = OMIT DRAINS SPAN 7.

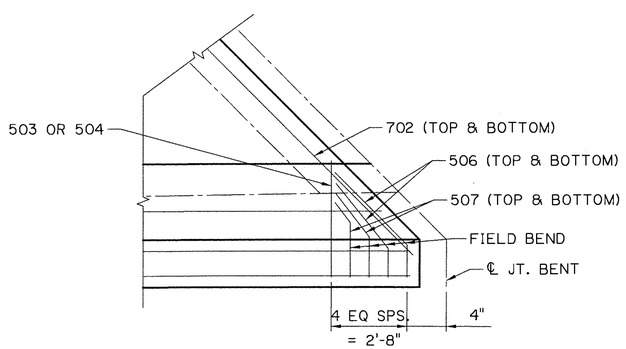

DETAIL A

✱✱ 2 BARS EACH LENGTH.

⊙ INCLUDES (3) THREE 1'-4" LAP SPLICES, ALL SPLICES TO BE STAGGERED.

△ FOR ESTIMATION PURPOSES ONLY. TO BE INCLUDED UNDER ITEM 6020600, STRUCTURAL STEEL, LUMP SUM.

STATE OF LOUISIANA
GERALD G. MENARD
License No. 20437
PROFESSIONAL ENGINEER
IN
CIVIL ENGINEERING
9/10/2020

ESTIMATED QUANTITIES (150' SPAN UNIT)

	BAR	NO.	SHORT BAR	VAR. (INS.)	LONG BAR	TOTAL LENGTH	LOCATION
	801	4			6'-6"	26'-0"	END DIAPHRAGMS
	802	98			30'-0"	2940'-0"	LONGIT. AT CONT. DIAPH.
	TOTAL NO. 8 BARS = 2966'-0" = 7919 LBS.						
	701	12			9'-9"	117'-0"	END DIAPHRAGMS
	702	4			38'-6"	154'-0"	SLAB AT JT. TOP & BOT.
	TOTAL NO. 7 BARS = 271'-0" = 554 LBS.						
	501	24			9'-6"	228'-0"	END DIAPHRAGMS
	502	36			9'-6"	342'-0"	CONTINUITY DIAPHRAGMS
✱✱	503	41	3'-9"	7.050	27'-3"	1271'-0"	TRANSV. TOP & BOT. OF SLAB
	504	430			28'-2"	12111'-8"	TRANSV. TOP & BOT. OF SLAB
✱✱	505	41	3'-9"	7.050	27'-3"	1271'-0"	TRANSV. TOP & BOT. OF SLAB
	506	8			6'-0"	48'-0"	TOP & BOT. OF SLAB @ JT.
	507	8			4'-0"	32'-0"	TOP & BOT. OF SLAB @ JT.
	508	24			6'-4"	152'-0"	CONTINUITY DIAPHRAGMS
	509	24			3'-2"	76'-0"	CONTINUITY DIAPHRAGMS
	TOTAL NO. 5 BARS = 15531'-8" = 16200 LBS.						
	401	60			5'-10"	350'-0"	END DIAPHRAGMS
⊙	402	104			155'-10"	16206'-8"	LONGIT. IN TOP & BOT. OF SLAB
	403	60			6'-10"	410'-0"	CONTINUITY DIAPHRAGMS
	404	510			5'-0"	2550'-0"	TRANSV. TOP OF SLAB @BARRIER
	TOTAL NO. 4 BARS = 19516'-8" = 13037 LBS.						
	TOTAL DEFORMED REINFORCING STEEL						**37710 LBS.**
	CLASS 6.5A4200 CONCRETE						**121.23 CU. YDS.**
	CONCRETE BRIDGE RAILING(32")						**301.58 LIN. FT.**
	STRIP SEAL JOINTS						**73.04 LIN. FT.**
△	**STRUCTURAL STEEL**						**35 LBS.**

SHEET NUMBER 228

PARISH	CITY	PROJECT
EAST BATON ROUGE	BATON ROUGE	12-CS-HC-0043

DESIGNED	CHECKED	DETAILED	CHECKED	DATE	SHEET
P.G.	GGM	S.J.A.	PG		1 OF 2

NO.	DATE	REVISION OR CHANGE ORDER DESCRIPTION	BY

SPAN DETAILS
SOUTH BOUND SPANS 5-7
MALL OF LA BOULEVARD BRIDGE

MALL OF LOUISIANA BOULEVARD

CITY OF BATON ROUGE PARISH OF EAST BATON ROUGE

EVANS-GRAVES ENGINEERS

9/10/2020 09:07

F:\00_PROJECTS\12-500\Sheet_Sets\Construction - Revised\P2 Sheet 228 Unit_SB02.dgn

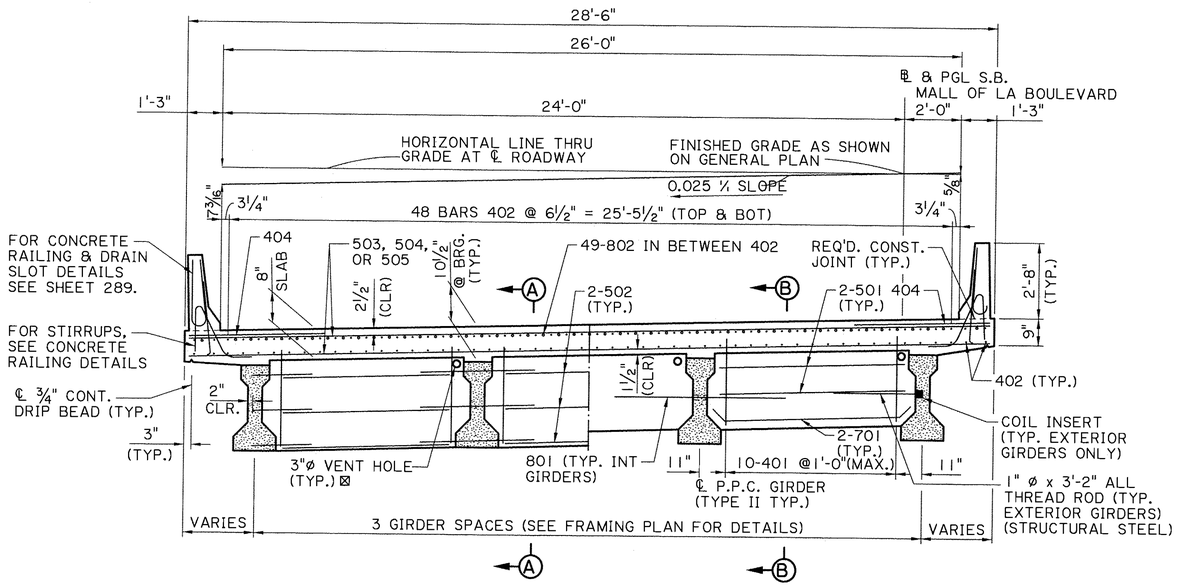

TYPICAL HALF SECTION
CONTINUITY DIAPHRAGM

TYPICAL HALF SECTION
END DIAPHRAGM

TYPICAL SECTION
SCALE: ⅜" = 1'-0"

⊠ 3"ø VENT HOLE IN EACH BAY END AND CONTINUITY DIAPRHAGMS

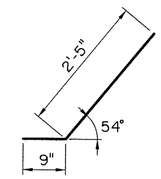

509
(3¾"ø PIN)

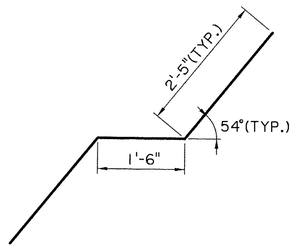

508
(3¾"ø PIN)

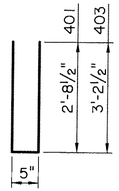

401 & 403
(2"ø PIN)

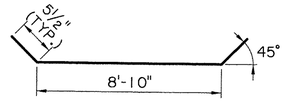

701
(5¼"ø PIN)

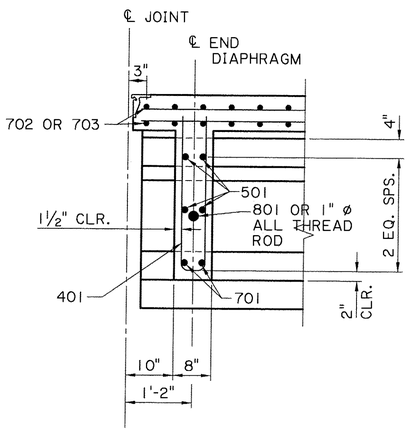

SECTION B-B
SCALE: ¾" = 1'-0"

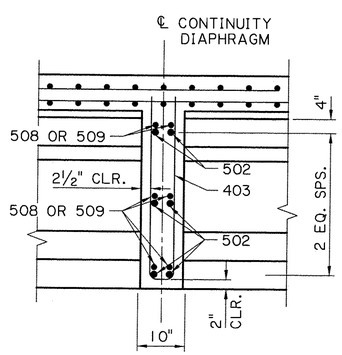

SECTION A-A
SCALE: ¾" = 1'-0"

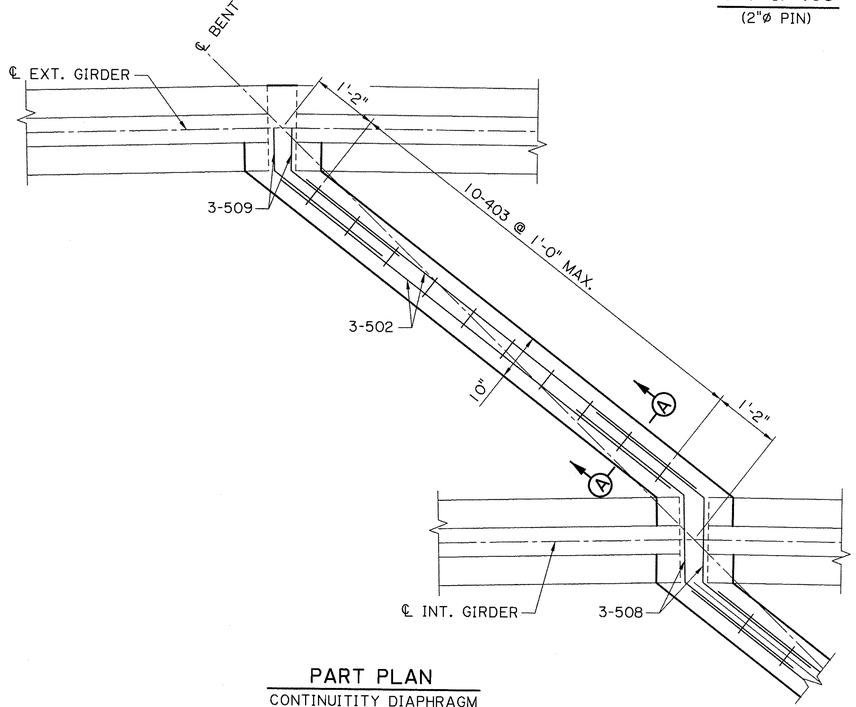

PART PLAN
CONTINUITY DIAPHRAGM
SCALE: ¾" = 1'-0"

GERALD G. MENARD
License No. 20437
PROFESSIONAL ENGINEER
IN
CIVIL ENGINEERING
9/10/2020

EVANS-GRAVES ENGINEERS

SHEET NUMBER 229

PARISH	CITY	PROJECT
EAST BATON ROUGE	BATON ROUGE	12-CS-HC-0043

DESIGNED	CHECKED	DETAILED	CHECKED	DATE	SHEET
PG	JW	SJA	JW		

NO.	DATE	REVISION OR CHANGE ORDER DESCRIPTION	BY

SPAN DETAILS
SOUTH BOUND SPANS 1-7
MALL OF LA BOULEVARD BRIDGE

MALL OF LOUISIANA BOULEVARD

9/10/2020 09:07

F:\00_PROJECTS\12-500\Sheet_Sets\Construction - Revised\P2 Sheet 229 deck-section_sb.dgn

09:07
9/10/2020
F:\00_PROJECTS\12-500\Sheet_Sets\Construction - Revised\P2 Sheet 230 Approach Slab_PaulatNB1.dgn

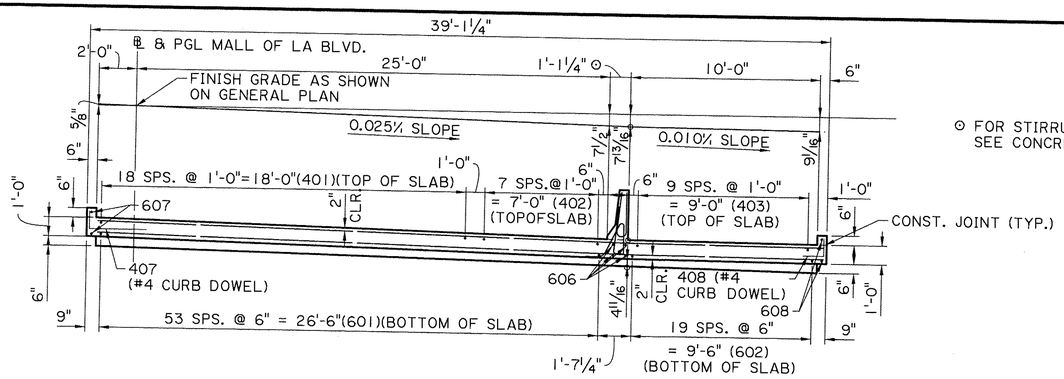

⊙ FOR STIRRUPS & DETAILS IN RAILING SLAB, SEE CONCRETE RAILING DETAILS

SECTION A-A
SCALE: 1/4"=1'-0"

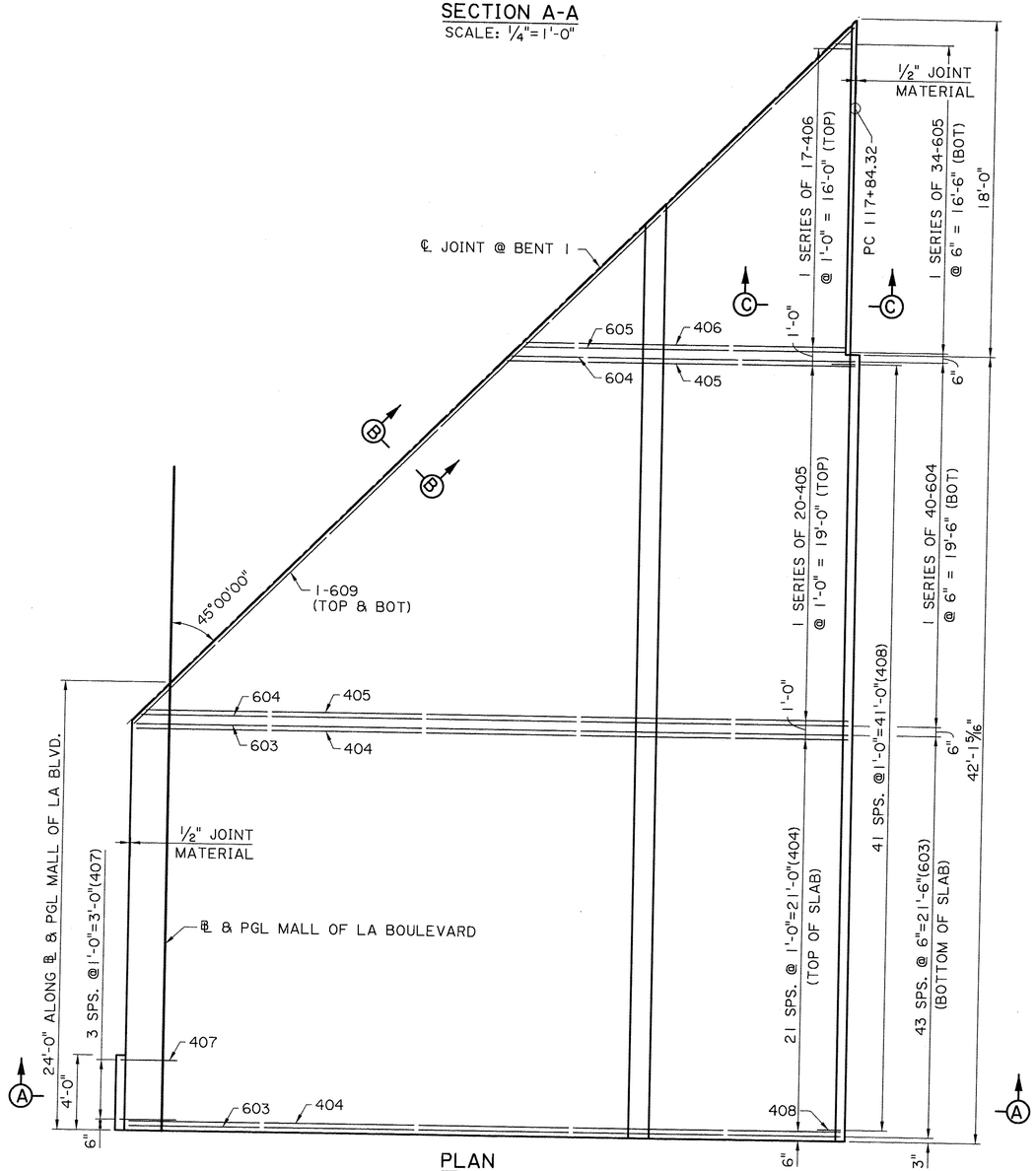

PLAN
SCALE: 1/4"=1'-0"

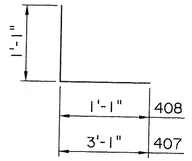

407 & 408
2"ø PIN

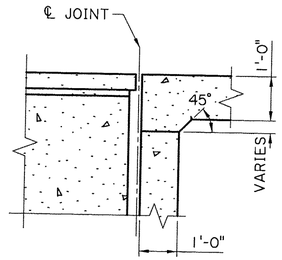

SECTION B-B
SCALE: ½"=1'-0"

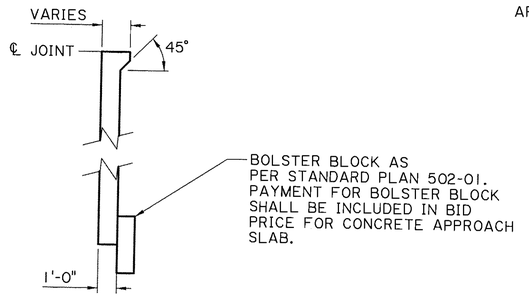

SECTION ALONG ℄ MALL OF LA BLVD.
SCALE: 1/4"=1'-0"

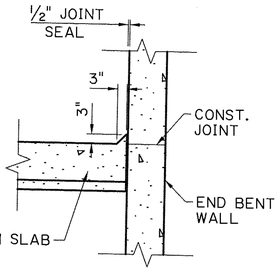

SECTION C-C
(AT LOW SIDE OF APPR. SLAB ONLY)
SCALE: ½"=1'-0"

ESTIMATED QUANTITIES (ONE APPROACH SLAB)

	BAR	NO.	SHORT BAR	VAR. (INS.)	LONG BAR	TOTAL LENGTH	LOCATION
*	601	54	21'-10"	6.113	48'-10"	1908'-0"	LONGIT. IN BOT. OF SLAB
*	602	20	49'-5"	6.368	59'-6"	1089'-2"	LONGIT. IN BOT. OF SLAB
	603	44			38'-3"	1683'-0"	TRANSV. BOT OF SLAB
*	604	40	18'-0"	6.154	38'-0"	1120'-0"	TRANSV. BOT OF SLAB
*	605	34	0'-6"	6.000	17'-0"	297'-6"	TRANSV. BOT OF SLAB
	606	4			48'-7"	194'-4"	LONGIT. @ BARRIER
	607	2			3'-8"	7'-4"	LONGIT. @ CURB
	608	2			41'-9"	83'-6"	LONGIT. @ CURB
	609	2			53'-6"	107'-0"	ALONG JOINT
	TOTAL NO. 6 BARS = 6489'-10" = 9,748 LBS.						
*	401	19	21'-10"	12.000	39'-10"	585'-10"	LONGIT. IN TOP OF SLAB
* ⊠	402	8	42'-6"	12.000	49'-6"	368'-0"	LONGIT. IN TOP OF SLAB
* ⊠	403	10	50'-5"	12.000	59'-5"	549'-2"	LONGIT. IN TOP OF SLAB
	404	22			38'-3"	841'-6"	TRANSV. TOP OF SLAB
*	405	20	18'-8"	12.000	37'-8"	563'-4"	TRANSV. TOP OF SLAB
*	406	17	1'-2"	12.000	17'-2"	155'-10"	TRANSV. TOP OF SLAB
	407	4			4'-2"	16'-8"	DOWELS IN CURB
	408	42			2'-2"	91'-0"	DOWELS IN CURB
	TOTAL NO. 4 BARS = 3171'-4" = 2,118 LBS.						
△	TOTAL DEFORMED REINFORCING STEEL					11,866 LBS.	
	CONCRETE APPROACH SLAB					176.00 SQ. YDS.	
	CONCRETE BRIDGE RAILING (32")					48.92 LIN. FT.	

* 1 BAR EACH LENGTH

⊠ INCLUDES (1) ONE 1'-8" MIN. LAP SPLICE, ALL SPLICES ARE TO BE STAGGERED

△ PAYMENT INCLUDED IN BID PRICE FOR CONCRETE APPROACH SLAB

STATE OF LOUISIANA
GERALD G. MENARD
License No. 20437
PROFESSIONAL ENGINEER
IN
CIVIL ENGINEERING
9/10/2020

SHEET NUMBER 230
PARISH EAST BATON ROUGE
CITY BATON ROUGE
PROJECT 12-CS-HC-0043
DESIGNED PG
CHECKED GGM
DETAILED SJA
CHECKED PG
DATE
SHEET
BY
NO. DATE REVISION OR CHANGE ORDER DESCRIPTION

APPROACH SLAB
NORTH BOUND (BEGIN)
MALL OF LA BOULEVARD BRIDGE
MALL OF LOUISIANA BOULEVARD

CITY OF BATON ROUGE ★ PARISH OF EAST BATON ROUGE

EVANS-GRAVES ENGINEERS

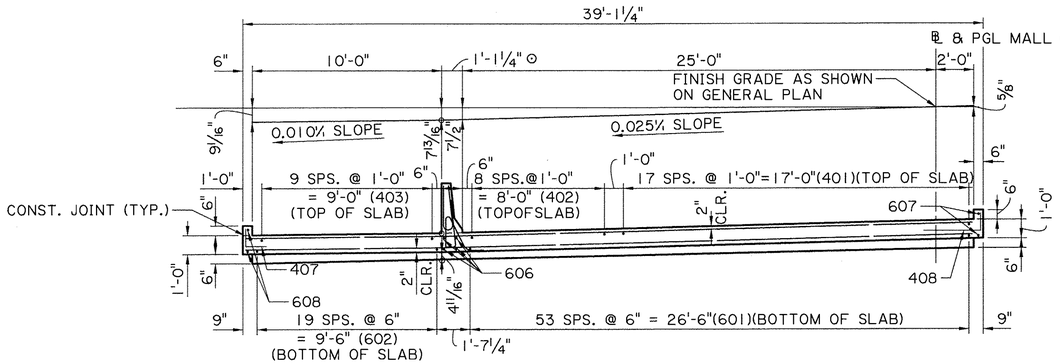

⊙ FOR STIRRUPS & DETAILS IN RAILING SLAB, SEE CONCRETE RAILING DETAILS

SECTION A-A
SCALE: ¼"=1'-0"

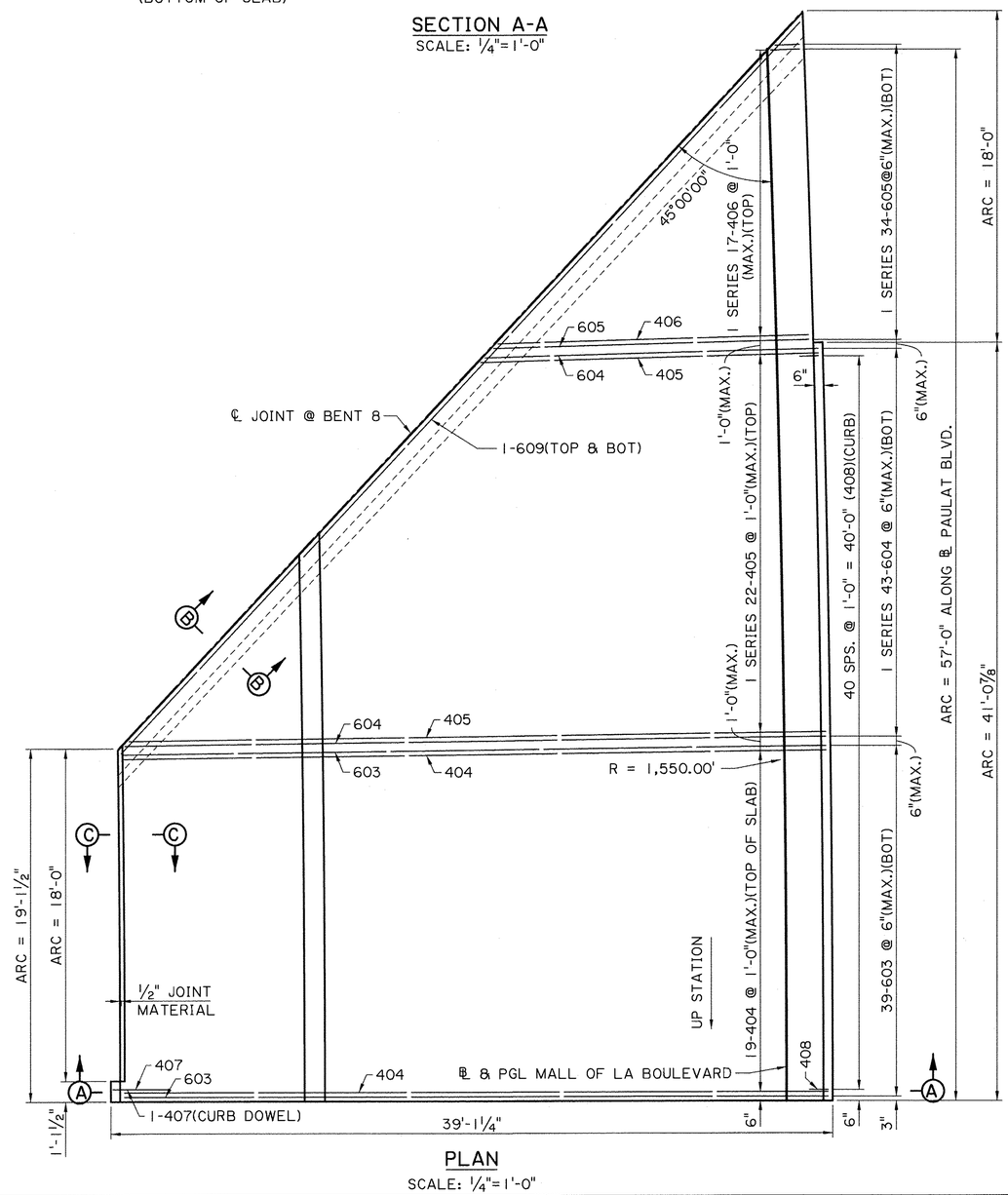

PLAN
SCALE: ¼"=1'-0"

ESTIMATED QUANTITIES (ONE APPROACH SLAB)

	BAR	NO.	SHORT BAR	VAR. (INS.)	LONG BAR	TOTAL LENGTH	LOCATION
*	601	54	30'-5"	6.283	58'-2"	2391'-9"	LONGIT. IN BOT. OF SLAB
*	602	20	18'-8"	6.368	28'-9"	474'-2"	LONGIT. IN BOT. OF SLAB
	603	39			38'-3"	1491'-9"	TRANSV. BOT OF SLAB
*	604	43	17'-11"	5.667	37'-9"	1196'-10"	TRANSV. BOT OF SLAB
*	605	34	0'-9"	5.879	16'-11"	300'-4"	TRANSV. BOT OF SLAB
	606	4			29'-3"	117'-0"	LONGIT. @ BARRIER
	607	2			40'-8"	81'-4"	LONGIT. @ CURB
	608	2			0'-9"	1'-6"	LONGIT. @ CURB
	609	2			53'-10"	107'-8"	
	TOTAL NO. 6 BARS = 6162'-4" = 9,256 LBS.						
⊠ *	401	18	42'-0"	12.471	59'-8"	915'-0"	LONGIT. IN TOP OF SLAB
*	402	9	30'-10"	12.500	39'-2"	315'-0"	LONGIT. IN TOP OF SLAB
*	403	10	18'-8"	12.778	28'-3"	234'-7"	LONGIT. IN TOP OF SLAB
	404	19			38'-3"	726'-9"	TRANSV. TOP OF SLAB
*	405	22	18'-2"	11.333	38'-0"	617'-10"	TRANSV. TOP OF SLAB
*	406	17	0'-11"	11.813	16'-8"	149'-6"	TRANSV. TOP OF SLAB
	407	1			4'-2"	4'-2"	DOWELS IN CURB
	408	41			2'-2"	88'-10"	DOWELS IN CURB
	TOTAL NO. 4 BARS = 3051'-8" = 2,038 LBS.						

△	TOTAL DEFORMED REINFORCING STEEL	11,294 LBS.
	CONCRETE APPROACH SLAB	167.86 SQ. YDS.
	CONCRETE BRIDGE RAILING(32")	30.78 LIN. FT.

* 1 BAR EACH LENGTH

⊠ INCLUDES (1) ONE 1'-8" MIN. LAP SPLICE, ALL SPLICES ARE TO BE STAGGERED

△ PAYMENT INCLUDED IN BID PRICE FOR CONCRETE APPROACH SLAB

FOR APPROACH SLAB DETAILS SEE SHEET 230.

STATE OF LOUISIANA
GERALD G. MENARD
License No. 20437
PROFESSIONAL ENGINEER
IN
CIVIL ENGINEERING
9/10/2020

SHEET NUMBER 231

PARISH: EAST BATON ROUGE
CITY: BATON ROUGE
PROJECT: 12-CS-HC-0043

DESIGNED PG
CHECKED GGM
DETAILED SJA
CHECKED PG
DATE
SHEET

NO. | DATE | REVISION OR CHANGE ORDER DESCRIPTION | BY

APPROACH SLAB
NORTH BOUND (END)
MALL OF LA BOULEVARD BRIDGE

MALL OF LOUISIANA BOULEVARD

CITY OF BATON ROUGE PARISH OF EAST BATON ROUGE

EVANS-GRAVES ENGINEERS

9/10/2020 09:08

F:\00_PROJECTS\12-500\Sheet_Sets\Construction - Revised\P2 Sheet 231 Approach Slab_PaulatNB2.dgn

F:\00_PROJECTS\12-500\Sheet_Sets\Construction - Revised\P2 Sheet 232 Approach Slab_PaulatSB1.dgn 9/10/2020 09:08

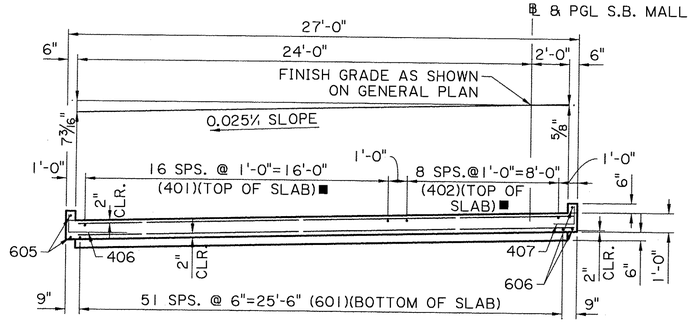

SECTION A-A
SCALE: ¼"=1'-0"

■ SEE SHEET 233 FOR SB (END) BAR SPACING.

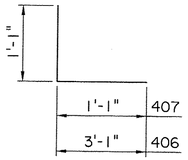

406 & 407
2"ø PIN

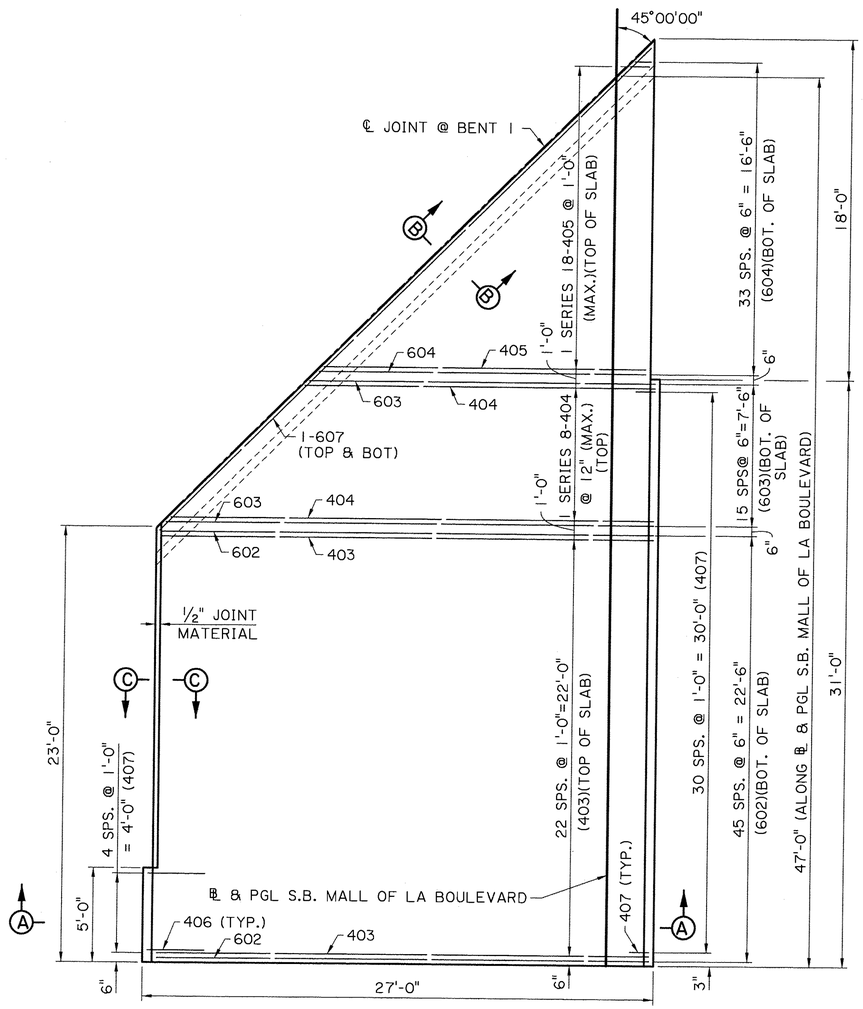

PLAN
SCALE: ¼"=1'-0"

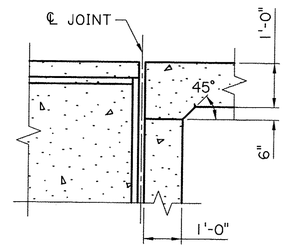

SECTION B-B
SCALE: ½"=1'-0"

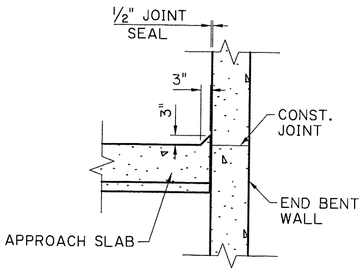

SECTION C-C
(AT LOW SIDE OF APPR. SLAB ONLY)
SCALE: ½"=1'-0"

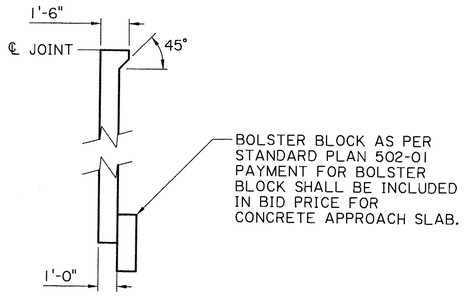

SECTION ALONG ℄ MALL OF LA BLVD.
SCALE: ¼"=1'-0"

ESTIMATED QUANTITIES (ONE APPROACH SLAB)

	BAR	NO.	SHORT BAR	VAR. (INS.)	LONG BAR	TOTAL LENGTH	LOCATION
*	601	52	22'-10"	6.000	48'-4"	1850'-4"	LONGIT. IN BOT. OF SLAB
	602	46			26'-2"	1203'-8"	TRANSV. BOT OF SLAB
*	603	16	18'-4"	6.000	25'-10"	353'-4"	TRANSV. BOT OF SLAB
*	604	34	0'-10"	6.182	17'-10"	317'-4"	TRANSV. BOT OF SLAB
	605	2			4'-8"	9'-4"	CURB
	606	2			30'-8"	61'-4"	CURB
	607	2			35'-9"	71'-6"	TRANSV. AT JOINT
	TOTAL NO. 6 BARS = 3866'-10" = 5,808 LBS.						
*	401	17	23'-1"	12.000	39'-1"	528'-5"	LONGIT. IN TOP OF SLAB
*⊙	402	9	41'-9"	12.000	49'-9"	411'-9"	LONGIT. IN TOP OF SLAB
	403	23			26'-2"	601'-10"	TRANSV. TOP OF SLAB
*	404	8	18'-7"	12.000	25'-7"	176'-8"	TRANSV. TOP OF SLAB
*	405	18	0'-7"	12.000	17'-7"	163'-6"	TRANSV. TOP OF SLAB
	406	5			4'-2"	20'-10"	DOWELS IN CURB
	407	31			2'-2"	67'-2"	DOWELS IN CURB
	TOTAL NO. 4 BARS = 1970'-2" = 1,316 LBS.						
△	TOTAL DEFORMED REINFORCING STEEL					7,124 LBS.	
	CONCRETE APPROACH SLAB					105.74 SQ. YDS.	

* 1 BAR EACH LENGTH

⊙ INCLUDES (1) ONE 1'-8" MIN. LAP SPLICE, ALL SPLICES ARE TO BE STAGGERED

△ PAYMENT INCLUDED IN BID PRICE FOR CONCRETE APPROACH SLAB

SHEET NUMBER 232

PARISH: EAST BATON ROUGE | CITY: BATON ROUGE | PROJECT: 12-CS-HC-0043

DESIGNED PG | CHECKED GGM | DETAILED SJA | CHECKED PG | DATE | SHEET

NO.	DATE	REVISION OR CHANGE ORDER DESCRIPTION	BY

APPROACH SLAB
SOUTH BOUND (BEGIN)
MALL OF LA BOULEVARD BRIDGE

MALL OF LOUISIANA BOULEVARD

STATE OF LOUISIANA
GERALD G. MENARD
License No. 20437
PROFESSIONAL ENGINEER
IN
CIVIL ENGINEERING
9/10/2020

CITY OF BATON ROUGE PARISH OF EAST BATON ROUGE

EVANS-GRAVES ENGINEERS

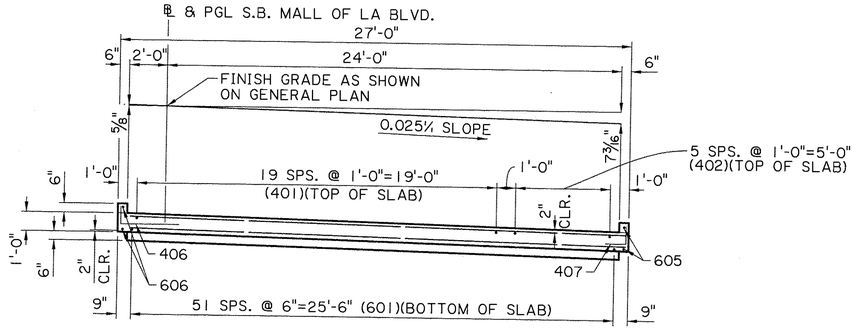

SECTION A-A
SCALE: 1/4"=1'-0"

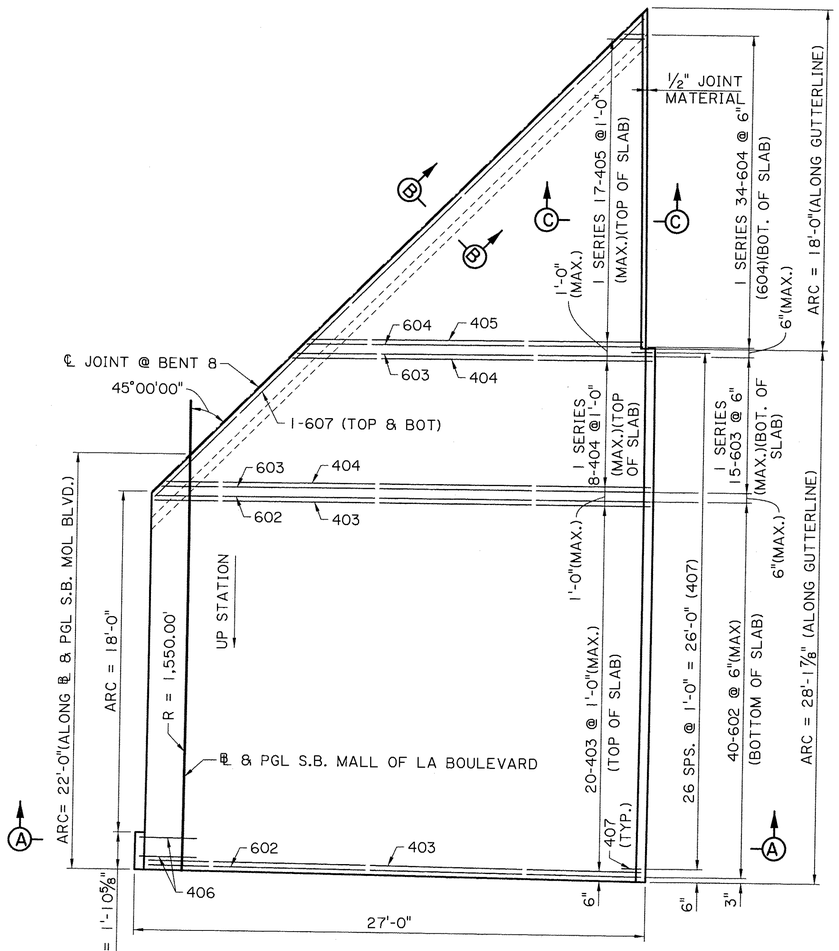

PLAN
SCALE: 1/4" = 1'-0"

ESTIMATED QUANTITIES (ONE APPROACH SLAB)

	BAR	NO.	SHORT BAR	VAR. (INS.)	LONG BAR	TOTAL LENGTH	LOCATION
*	601	52	19'-9"	6.059	45'-6"	1696'-6"	LONGIT. IN BOT. OF SLAB
	602	40			26'-2"	1046'-8"	TRANSV. BOT OF SLAB
*	603	15	18'-8"	6.071	25'-9"	333'-2"	TRANSV. BOT OF SLAB
*	604	34	1'-0"	6.061	17'-8"	317'-4"	TRANSV. BOT OF SLAB
	605	2			27'-8"	55'-4"	CURB
	606	2			1'-6"	3'-0"	CURB
	607	2			35'-10"	71'-8"	TRANSV. AT JOINT
	TOTAL NO. 6 BARS = 3523'-8" = 5,292 LBS.						
*	401	20	20'-0"	12.105	39'-2"	591'-8"	LONGIT. IN TOP OF SLAB
*⊙	402	6	41'-10"	12.000	46'-10"	266'-0"	LONGIT. IN TOP OF SLAB
	403	20			26'-2"	523'-4"	TRANSV. TOP OF SLAB
*	404	8	18'-11"	11.286	25'-6"	177'-8"	TRANSV. TOP OF SLAB
*	405	17	1'-3"	12.125	17'-5"	158'-8"	TRANSV. TOP OF SLAB
	406	2			4'-2"	8'-4"	DOWELS IN CURB
	407	27			2'-2"	58'-6"	DOWELS IN CURB
	TOTAL NO. 4 BARS = 1784'-2" = 1,192 LBS.						
△	TOTAL DEFORMED REINFORCING STEEL						6,484 LBS.
	CONCRETE APPROACH SLAB						96.99 SQ. YDS.

* 1 BAR EACH LENGTH

⊙ INCLUDES (1) ONE 1'-8" MIN. LAP SPLICE, ALL SPLICES ARE TO BE STAGGERED.

△ PAYMENT INCLUDED IN BID PRICE FOR CONCRETE APPROACH SLAB

FOR APPROACH SLAB DETAILS, SEE SHEET 232.

SHEET NUMBER 233

PARISH: EAST BATON ROUGE
CITY: BATON ROUGE
PROJECT: 12-CS-HC-0043

DESIGNED PG
CHECKED JW
DETAILED SJA
CHECKED JW
DATE
SHEET
BY

REVISION OR CHANGE ORDER DESCRIPTION | NO. | DATE

APPROACH SLAB
SOUTH BOUND (END)
MALL OF LA BOULEVARD BRIDGE
MALL OF LOUISIANA BOULEVARD

CITY OF BATON ROUGE ★ PARISH OF EAST BATON ROUGE

EVANS-GRAVES ENGINEERS

STATE OF LOUISIANA
GERALD G. MENARD
License No. 20437
PROFESSIONAL ENGINEER
IN
CIVIL ENGINEERING
9/10/2020

F:\00_PROJECTS\12-500\Sheet_Sets\Construction - Revised\P2 Sheet 233 Approach Slab_PaulatSB2.dgn
9/10/2020 09:08

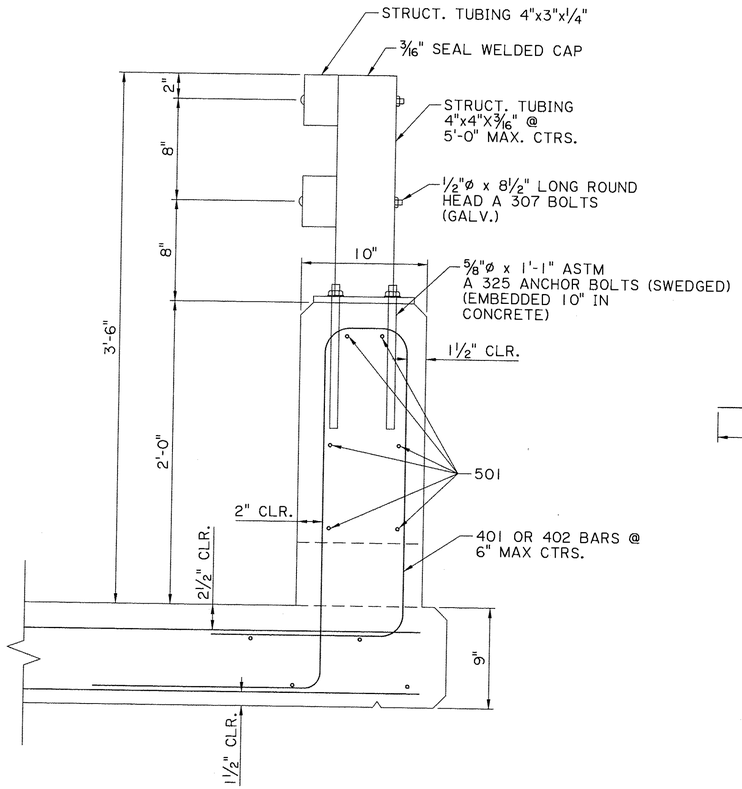

RAILING / SIDEWALK
SCALE: 2" = 1'-0"

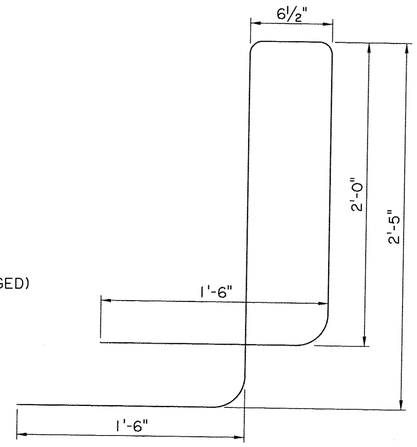

401
2"ø PIN

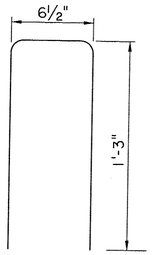

402
2"ø PIN

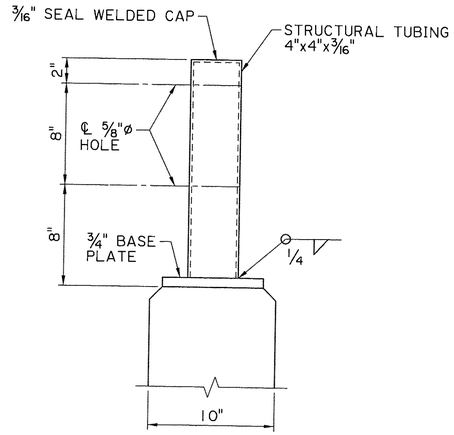

RAILING DETAIL
SCALE: 2" = 1'-0"

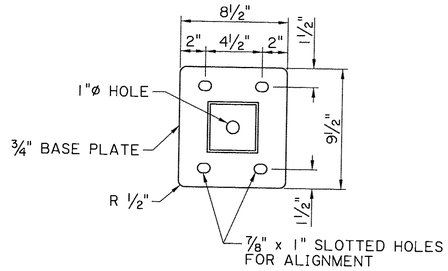

BASE PLATE DETAIL
SCALE: 2" = 1'-0"

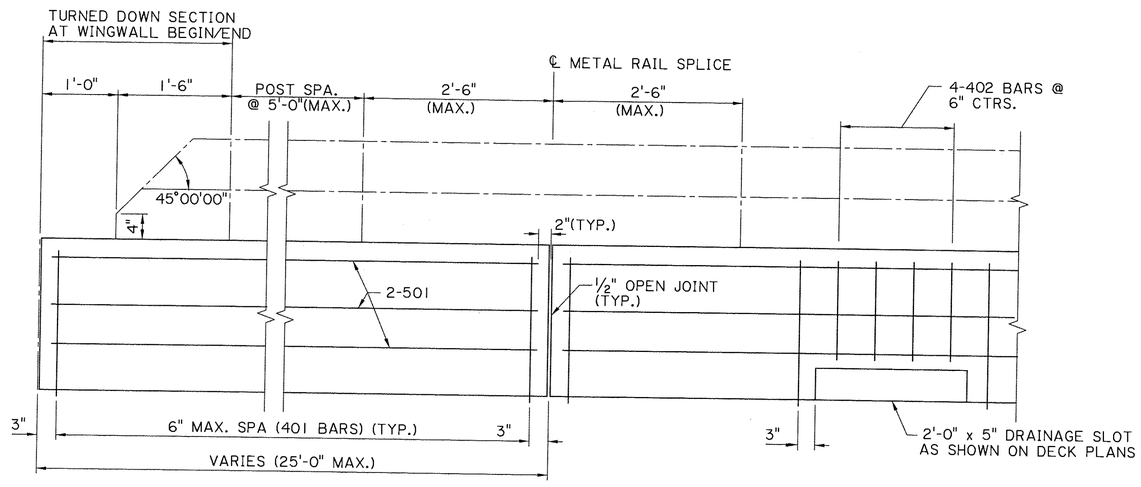

STEEL AND CONCRETE RAILING ELEVATION
SCALE: 1" = 1'-0"

NOTES:

ALL STRUCTURAL TUBING TO BE ASTM A 500, GRADE B MATERIAL.

STRUCTURAL STEEL TO BE ASTM A 709.

ALL STRUCTURAL STEEL AND HARDWARE SHALL BE HOT DIPPED GALVANIZED AFTER FABRICATION.

BARRIER JOINTS ARE REQUIRED AS SHOWN ON PLANS.

CONCRETE, METAL RAILING, AND REINFORCING STEEL ARE TO BE PAID FOR UNDER CONCRETE/METAL BRIDGE RAILING ITEM 6010903.

ALL CONCRETE SHALL BE CLASS 6.5A4200 CONCRETE.

STATE OF LOUISIANA
GERALD G. MENARD
License No. 20437
PROFESSIONAL ENGINEER
IN
CIVIL ENGINEERING
9/10/2020

SHEET NUMBER 270

PARISH EAST BATON ROUGE
CITY BATON ROUGE
PROJECT 12-CS-HC-0043

DESIGNED P.G.
CHECKED GGM
DETAILED S.J.A.
CHECKED GGM
DATE
SHEET

NO.	DATE	REVISION OR CHANGE ORDER DESCRIPTION	BY

BRIDGE RAILING DETAILS

DAWSON CREEK BRIDGES

MALL OF LOUISIANA BOULEVARD

EVANS-GRAVES ENGINEERS

F:\00_PROJECTS\12-500\Sheet_Sets\Construction - Revised\P2 Sheet 270 Bridge Railing Details.dgn 9/10/2020 09:09

CHECK PRINTS
9/4/2012 09:46
IP_PWP:dms31588\msgspan1 (Vector).dgn

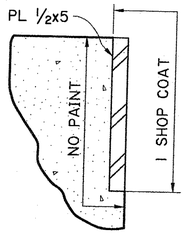

PAINTING REQUIREMENTS FOR END DAMS
(NTS)

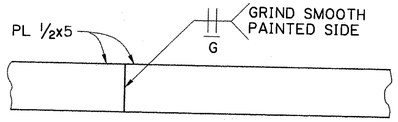

PERMISSIBLE END DAM SPLICE
PL ½x5 TO HAVE A UNIVERSAL MILL FACE FINISH ON TOP OR TOP EDGE IS TO BE FINISHED SMOOTH IF CUT TO MATCH CROWN OF ROADWAY.
(NTS)

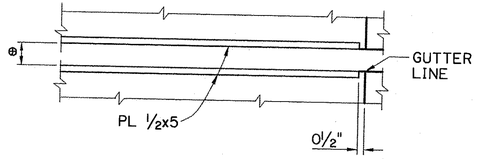

PART PLAN OF JOINT
(NTS)
⊕ SEE SPAN DETAILS FOR JOINT OPENING.

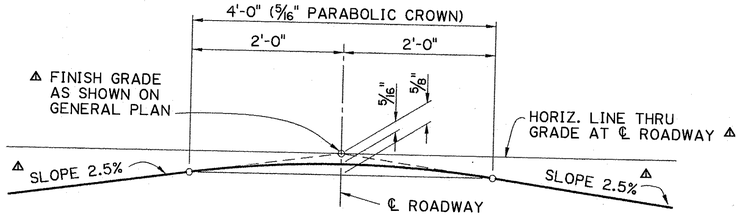

SKETCH SHOWING PARABOLIC CROWN
(NTS)
⚠ UNLESS OTHERWISE NOTED IN PLANS

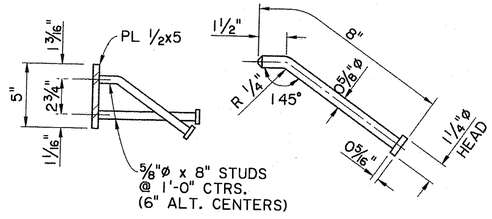

ANCHOR STUD DETAILS
(NTS)
ANCHOR STUDS SHALL BE ⅝" ø x 8" AUTOMATIC END WELDED TYPE. ALL BENDS ARE TO BE MADE PRIOR TO WELDING.

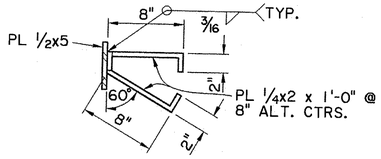

ALTERNATE STRAP ANCHOR
(SCALE: 1½" = 1')
STRAP ANCHORS ¼x2 x 1'-0" @ 8" ALTERNATE CENTERS MAY BE SUBSTITUTED FOR ⅝" ø x 8" STUDS AT NO ADDITIONAL PAY.

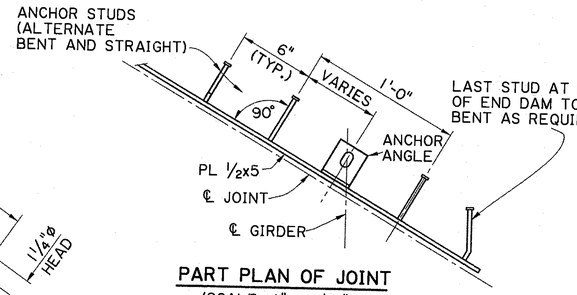

PART PLAN OF JOINT
(SCALE: 1" = 1'-0")
(SHOWING TYPICAL END DAM FOR SKEWED JOINT)

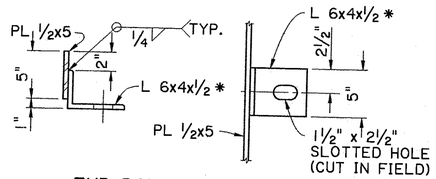

END DAM ANCHOR ANGLE
(SCALE: 1½" = 1'-0")
* USE L 8x4x½ FOR APPROACH SLAB END DAMS.

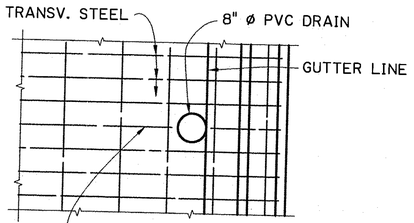

PLAN
(SHOWING DRAIN)

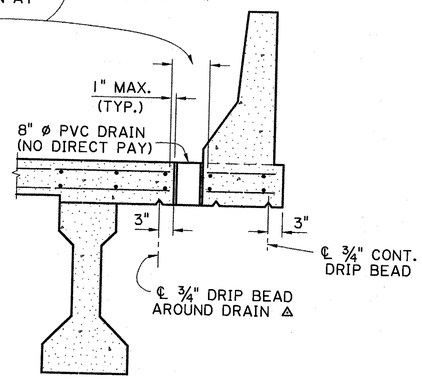

SECTION THRU DRAIN
(SCALE: ¾" = 1'-0")
⚠ AT THE CONTRACTOR'S OPTION, A ½" EXTENSION OF PIPE DRAIN MAY BE USED IN LIEU OF ¾" DRIP BEAD. IF THE CONTRACTOR USES THE DRAIN WITH THE ½" EXTENSION, THE DRAIN IS TO HAVE 2 GROOVES CUT @ L/2. REFER TO DETAIL "A".

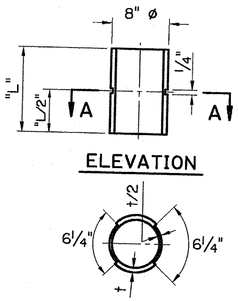

ELEVATION
SECTION A-A
DETAIL "A"
SHOWING GROOVE DETAILS
(NTS)

SPAN NOTES

PAY QUANTITIES: THE FOLLOWING MATERIALS ARE TO BE PAID FOR UNDER STRUCTURAL METALWORK PAY ITEM, IN SPAN QUANTITIES: END DAM PLATES, ANCHOR STUDS OR STRAPS, SUPPORT ANGLES , 1" ø ALL THREAD RODS, AND END DAM STABILIZER BARS.

POUR RATES: MINIMUM BRIDGE DECK POUR RATES WILL BE ESTABLISHED BASED ON THE VOLUME OF CONCRETE CONTAINED IN ANY TWO ADJACENT SPANS TO BE POURED CONTINUOUSLY DIVIDED BY FOUR (4) HOURS. IF THE CONTRACTOR ELECTS TO POUR MORE THAN TWO (2) ADJACENT SPANS DURING THE SAME POURING OPERATION, NO MORE THAN FOUR (4) HOURS CAN ELAPSE BETWEEN THE COMPLETION OF THE POUR ON ANY TWO (2) ADJACENT SPANS.

THE POURING RATES ARE TO BE COMPUTED BY THE CONTRACTOR AND SUBMITTED TO THE PROJECT ENGINEER TWO WEEKS PRIOR TO BEGINNING ANY BRIDGE DECK POUR. IF THE CONTRACTOR FAILS TO MEET THE MINIMUM PLACEMENT RATE, THE PROJECT ENGINEER MAY REJECT THE POUR; FURTHER PLACEMENT OF SIMILAR NATURE AND SIZE WILL NOT BE PERMITTED UNTIL CORRECTIVE MEASURES HAVE BEEN TAKEN TO ENSURE THAT THE MINIMUM PLACEMENT RATE CAN BE MET.

POURING SEQUENCE: "B" SEGMENTS ARE NEVER ALLOWED TO HAVE A 'FREE EDGE'. EACH "B" SEGMENT MUST START AND END AT A HARDENED OR PLASTIC "A" SEGMENT. THE CONTRACTOR SHALL POUR AND SATISFACTORILY FINISH THE SLAB USING ANY OF THE FOLLOWING SEQUENCES AT HIS OPTION:

1) MULTIPLE SEGMENTS "A" MAY BE POURED FIRST FOLLOWED BY SEGMENTS "B".
2) ADJACENT SEGMENTS "A" AND "B" MAY BE POURED TOGETHER BEGINNING AND ENDING WITH A SEGMENT "A". BEGINNING WITH A SEGMENT "B" MAY BE ALLOWED ONLY IF THE ADJACENT SEGMENT "A" WAS POURED PREVIOUSLY.
3) THE ENTIRE UNIT MAY BE POURED IN ONE CONTINUOUS POUR.

CONTINUITY DIAPHRAGMS ARE TO BE POURED AT THE SAME TIME AS SEGMENTS "B". OTHER DIAPHRAGMS ARE TO BE POURED PRIOR TO THE DECK POUR.

CONSTRUCTION JOINTS: WHEN CONSTRUCTION JOINTS ARE USED, NOT LESS THAN 7 DAYS SHALL HAVE ELAPSED BETWEEN ADJACENT POURS. THE VERTICAL SURFACES OF THE SLAB CONSTRUCTION JOINTS BETWEEN ADJACENT POURS SHALL BE COATED, PRIOR TO EACH SUCCEEDING POUR, WITH AN APPROVED 2-PART LIQUID EPOXY ADHESIVE CAPABLE OF BONDING FRESH TO CURED CONCRETE AND CURING IN THE PRESENCE OF MOISTURE. THE EPOXY SHALL BE APPLIED ACCORDING TO THE MANUFACTURER'S INSTRUCTIONS.

JOINT DETAILS SHOWN THIS SHEET ARE APPLICABLE TO OPEN JOINTS. WHERE REQUIRED, STRIP SEALS SHALL BE USED. DETAILS ARE SIMILAR EXCEPT AS SHOWN ON STRIP SEAL JOINT DETAILS.

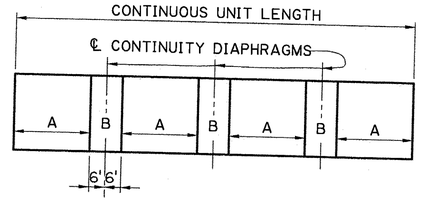

POURING SEQUENCE DIAPHRAGM
(NTS)

STATE OF LOUISIANA
JENAN NAKHLEH
REG. No. 18692
REGISTERED PROFESSIONAL ENGINEER
IN
CIVIL ENGINEERING
9/9/2012

STATE OF LOUISIANA
GERALD G. MENARD
License No. 20437
PROFESSIONAL ENGINEER
IN
CIVIL ENGINEERING
9/10/2012

THESE STANDARD PLANS HAVE BEEN PROPERLY EXAMINED BY ME, THE UNDERSIGNED PROFESSIONAL ENGINEER. I HAVE DETERMINED THAT THESE PLANS COMPLY WITH ALL APPLICABLE CODES AND HAVE BEEN PROPERLY ADAPTED TO USE ON THIS PROJECT.

SHEET NUMBER 280

PARISH	CONTROL SECTION	STATE PROJECT

DESIGNED C. deLATOUR
CHECKED J. NAKHLEH
DETAILED
CHECKED
SERIES NUMBER 03-05-2001 1 OF 5

REVISION DESCRIPTION	BY	DATE:

APPROVED BY CHIEF ENGINEER: DATE

STANDARD DETAIL MISC. SPAN AND GIRDER DETAILS

MISC. SPAN AND GIRDER DETAILS
(END DAMS, DRAINS, SPAN NOTES, POURING SEQUENCE AND CROWN).

CHECK PRINTS
9/4/2012 09:52
IP_PWP:dms31588\msgspan2 (Vector).dgn

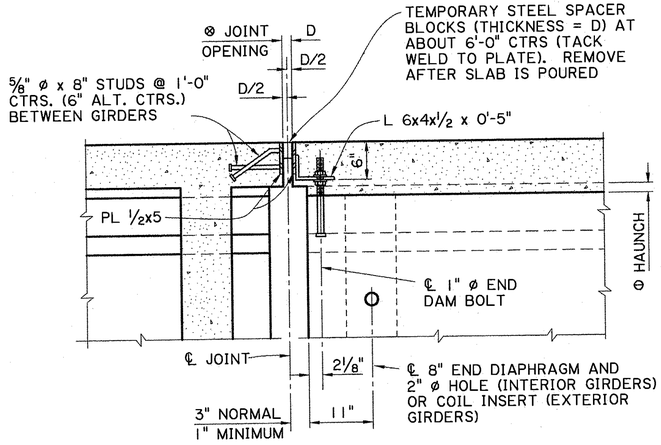

PART SECTION BETWEEN GIRDERS

PART SECTION AT GIRDER

CONNECTION DETAIL AT EXPANSION BENTS

(SCALE: 1" = 1'-0")

NOTE:
OPEN JOINTS WITH END DAMS ARE USED AT INTERMEDIATE BENTS. WHERE REQUIRED STRIP SEAL JOINTS SHALL BE USED. DETAILS ARE SIMILAR EXCEPT AS SHOWN ON STRIP SEAL JOINT DETAILS.

NOTE:
STRIP SEAL JOINTS ARE REQUIRED AT END BENTS. IN SPECIAL CASES OPEN JOINTS MAYBE USED, REFER TO PLANS.

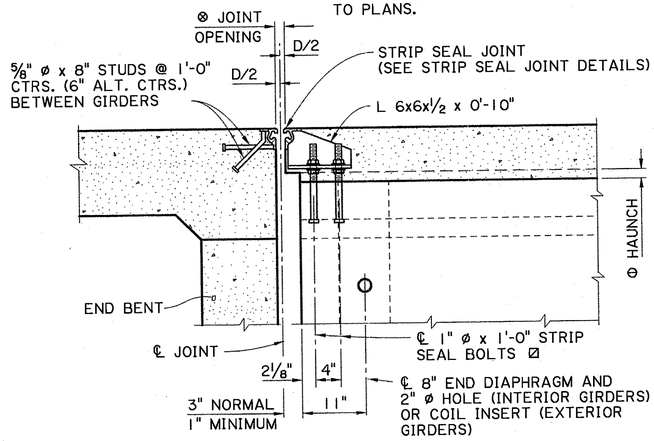

PART SECTION BETWEEN GIRDERS

PART SECTION AT GIRDER

CONNECTION DETAIL AT END BENT

(SCALE: 1" = 1'-0")

Θ HAUNCH THICKNESS REQUIRED BY THE PLANS IS TO BE MAINTAINED AT ℄ BEARING EXCEPT FOR GIRDER FABRICATION AND CONSTRUCTION TOLERANCES. THIS DIMENSION IS TO BE VARIED AS REQUIRED WITHIN THE SPAN IN ORDER TO MAINTAIN CONSTANT SLAB THICKNESS AND TO CONSTRUCT THE DECK TO PROPER GRADE.

⊗ SEE SPAN DETAILS FOR JOINT OPENING.

☒ SEE BENT DETAILS FOR STRIP SEAL BOLTS AT END BENT.

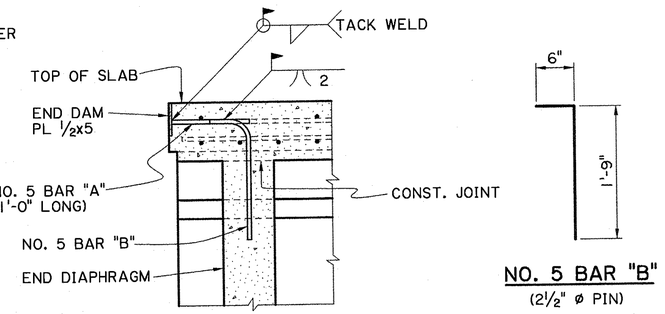

NO. 5 BAR "B" (2 1/2" ø PIN)

SECTION BETWEEN GIRDERS

(SHOWING END DAM STABILIZER BARS)
(NTS)

END DAM STABILIZER BARS:

NO. 5 BARS "B" SHALL BE PLACED IN ONE END DIAPHRAGM PER JOINT EQUALLY SPACED BETWEEN END DAM ANCHOR ANGLES AND BOLTS AT 4'-6" MAXIMUM CENTERS. NO. 5 BARS "A" TO BE TACK WELDED TO THE END DAM PLATE AT THE NO. 5 BARS "B" LOCATIONS. STABILIZER BARS ARE NOT REQUIRED FOR STRIP SEAL JOINTS.

PROCEDURES:

1) CAST NO. 5 BARS "B" BARS IN END DIAPHRAGM CONCRETE.
2) LOOSELY TIE NO. 5 BARS "A" TO NO. 5 BARS "B" AFTER END DAMS AND DECK STEEL ARE IN PLACE.
3) TACK WELD NO. 5 BARS "A" TO END DAM PLATE.
4) ADJUST END DAM. FIRMLY TIE AND THEN WELD NO. 5 BARS "A" TO NO. 5 BARS "B".
5) CAST DECK.

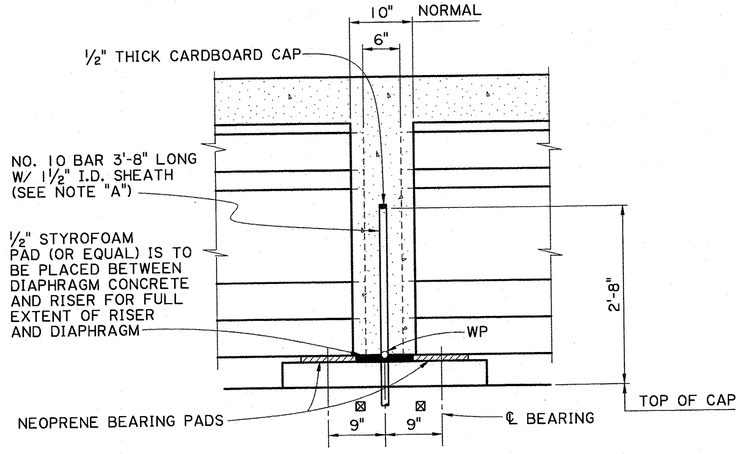

CONNECTION DETAIL AT CONTINUITY DIAPHRAGM

(NTS)

☒ NOMINAL DIMENSION SHOWN. ACTUAL BEARING LOCATION TO BE AS SPECIFIED ELSEWHERE IN THE PLANS.

NOTE "A":

DOWELS IN THE CAP SHALL BE GALVANIZED NO. 10 DEFORMED REINFORCING STEEL. PRIOR TO POURING THE CONTINUITY DIAPHRAGM, THE DOWELS SHALL BE BE SHEATHED BY A 1 1/2" I.D. RIGID SLEEVE WITH A 1/2" THICK CARDBOARD CAP ABOVE THE TOP OF THE DOWELS TO ALLOW THE GIRDERS TO DEFLECT ON THEIR BEARING PADS UNDER FUTURE LOADS.

TO FACILITATE PLACEMENT OF GIRDERS, THE CONTRACTOR MAY SET THE NO. 10 DOWELS BY ONE OF THE FOLLOWING METHODS:
1) SETTING DOWELS IN APPROVED NON-SHRINK GROUT IN PREFORMED HOLES HAVING A MINIMUM DIAMETER OF 3".
2) SETTING DOWELS AT INITIAL CASTING OF CAP.

* ON SKEWED BRIDGES, INCREASE THIS DIMENSION SO THAT THE ASPHALTIC MATERIAL EXTENDS 1 1/2" BEYOND THE EDGE OF THE CONTINUITY DIAPHRAGM. EXAMPLE: FOR A 30° SKEWED BRIDGE, THIS DIMENSION = 8 1/2".

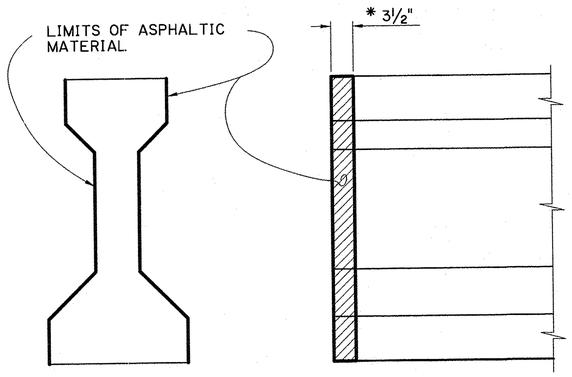

NOTES:
1) UPON REMOVAL OF BEAMS FROM FORMS, ALL EXPOSED ENDS OF STRANDS SHALL BE CUT OFF FLUSH WITH THE CONCRETE FACE AND COATED WITH ONE (1) COAT OF SIKA SIKADUR 31 HI-MOD GEL EPOXY PASTE ADHESIVE, OR APPROVED EQUAL.
2) APPLY ASPHALTIC MATERIAL WITH A BRUSH TO ENDS OF GIRDERS AS SHOWN AT CONTINUITY DIAPHRAGMS WHERE GIRDERS ARE EMBEDDED IN CONCRETE. PAINT INSIDE FACE OF EXTERIOR GIRDERS AND BOTH SIDES OF INTERIOR GIRDERS. ASPHALTIC MATERIAL TO MEET ASTM D 1187 AND APPLIED ACCORDING TO MANUFACTURER'S RECOMMENDATION.
COST FOR THE ABOVE SHALL BE INCLUDED IN THE GIRDER PRICE, PER LINEAR FOOT.

COATING ENDS OF PRESTRESSING STRANDS AND BONDBREAKER AT CONTINUITY DIAPHRAGM

(NTS)

STATE OF LOUISIANA
JENAN NAKHLEH
REG. No. 18692
REGISTERED PROFESSIONAL ENGINEER IN CIVIL ENGINEERING
Jenan Nakhleh
9/4/2012

STATE OF LOUISIANA
GERALD G. MENARD
License No. 20457
PROFESSIONAL ENGINEER IN CIVIL ENGINEERING
Gerald G. Menard
9/10/2020

THESE STANDARD PLANS HAVE BEEN PROPERLY EXAMINED BY ME, THE UNDERSIGNED PROFESSIONAL ENGINEER. I HAVE DETERMINED THAT THESE PLANS COMPLY WITH ALL APPLICABLE CODES AND HAVE BEEN PROPERLY ADAPTED TO USE ON THIS PROJECT.

SHEET NUMBER 281

PARISH | CONTROL SECTION | STATE PROJECT

DESIGNED C. DELATOUR
CHECKED
DETAILED J. NAKHLEH
CHECKED
SERIES NUMBER 03-05-2001
2 OF 5

REVISION OR CHANGE ORDER DESCRIPTION | DATE | NO. | BY

MISC. SPAN AND GIRDER DETAILS

(CONNECTION DETAILS AND END DAM STABILIZERS)

STANDARD DETAIL MISC. SPAN AND GIRDER DETAILS

CHECK PRINTS
9/4/2012 09:54
IP_PWP:dms31588\msgspan3 (Vector).dgn

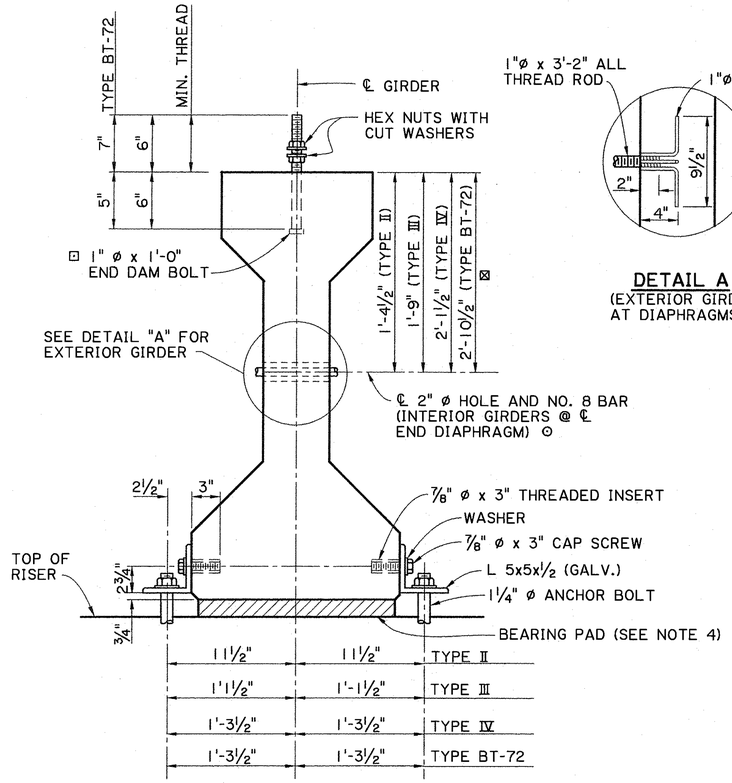

TYPICAL GIRDER END VIEW *

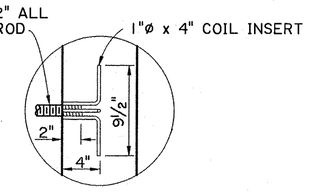

DETAIL A
(EXTERIOR GIRDER AT DIAPHRAGMS)

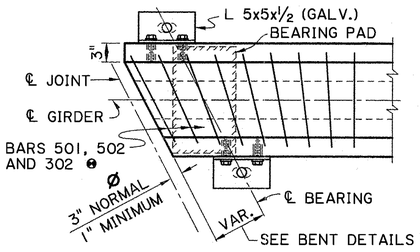

SKEW JOINT AT END AND TRANSITION BENTS *

(DETAILS NOT SHOWN SIMILAR TO DETAILS SHOWN RIGHT)

❶ MINIMUM LAP SPLICE OF 15" ON 302 BARS WILL REQUIRE ADJUSTMENT TO STANDARD BAR DIMENSIONS IN HIGH SKEW ENDS.

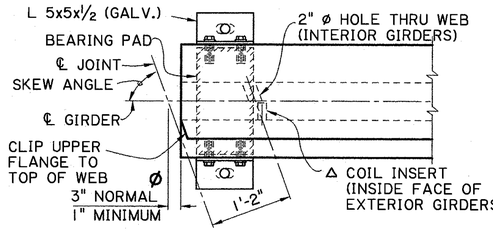

SKEW JOINT AT INTERMEDIATE BENT *

△ SKEW THREADED INSERTS AT GIRDER ENDS ADJACENT TO END BENT WHEN SKEW ANGLE EXCEEDS 15° FROM NORMAL.

ø PERPENDICULAR TO ℄ JOINT.

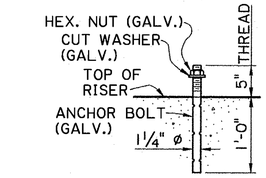

GIRDER ANCHOR BOLT

ANCHOR BOLTS TO BE SWEDGED, ASTM F1554, GRADE 36, GALV., UNLESS OTHERWISE NOTED, AND INCLUDED AS STRUCTURAL METALWORK IN BENT OR PIER QUANTITIES.

INSTALLING ANCHOR BOLTS BY DRILLING WILL NOT BE ALLOWED. ONE OF THE FOLLOWING ALTERNATES SHALL BE UTILIZED:

1) CAST ANCHOR BOLT IN PLACE WITH CAP.
2) PREFORM HOLE WITH A BLOCK-OUT AND THEN SET ANCHOR BOLT WITH A NON-SHRINK GROUT FROM QPL-47.

⊠ NOMINAL DIMENSION SHOWN. ACTUAL BEARING LOCATION TO BE AS SPECIFIED ELSEWHERE IN THE PLANS.

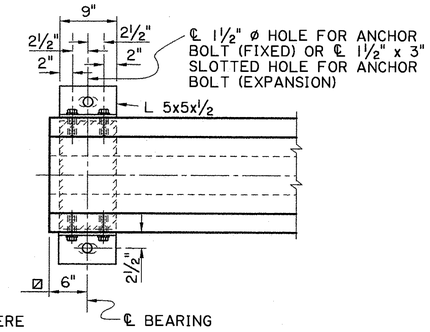

PART PLAN AT END OF GIRDER *

(SHOWING BEARING ANCHOR DETAILS)
(APPLIES ONLY TO GIRDERS TO BE ANCHORED AS SPECIFIED IN PLANS.)

NOTE (PAY QUANTITIES):

MATERIALS TO BE INCLUDED IN PRICE BID PER LINEAR FOOT OF PRECAST-PRESTRESSED CONCRETE GIRDERS ARE LISTED ON SHEETS 4 & 5 OF 5.
MATERIALS TO BE INCLUDED UNDER STRUCTURAL METALWORK, PAY ITEM IN SPAN QUANTITIES ARE LISTED ON SHEET 1 OF 5.

NOTES (GIRDER):

⊙ 2" ø HOLE (INTERIOR GIRDERS) AND 1" ø COIL INSERT (EXTERIOR GIRDERS) ARE REQUIRED AT ℄ INTERMEDIATE DIAPHRAGM FOR SPANS GREATER THAN 50' IN LENGTH.

⊠ THIS DIMENSION MAY BE ADJUSTED TO CLEAR DRAPED STRANDS WHEN NECESSARY AND IS TYPICAL FOR ALL GIRDERS REGARDLESS OF ROADWAY CROWN.

⊡ 2 BOLTS ARE REQUIRED FOR STRIP SEAL JOINTS. SEE STRIP SEAL JOINT DETAILS.

COIL INSERTS SHALL BE WILLIAMS TYPE C17-1x4 THIN SLAB LIFTING INSERT OR AN APPROVED EQUAL.

NOTES (BEARING ASSEMBLY):

1) BEARING ASSEMBLY (ANGLES, CAP SCREWS, WASHERS, THREADED INSERTS, AND ANCHOR BOLTS), ARE REQUIRED ONLY ON GIRDER ENDS THAT ARE BELOW DECK JOINTS AND THAT ARE SPECIFIED IN THE PLANS TO BE ANCHORED. BEARING ASSEMBLY IS NOT REQUIRED AT FIXED ENDS OF CONTINUOUS SPAN GIRDERS. BEARING PADS ARE REQUIRED FOR ALL GIRDERS AND ARE TO BE SHIPPED FREE OF GIRDER.

2) WASHERS AND CAP SCREWS AT BEARING ASSEMBLY ARE TO BE GALVANIZED. AT THE CONTRACTOR'S OPTION, THREADED INSERTS AT BEARING ASSEMBLY MAY BE GALVANIZED OR ELECTROPLATED AND COVERED WITH GREASE.

3) ALL STEEL CLIP ANGLES SHALL BE HOT-DIPPED GALVANIZED IN ACCORDANCE WITH STANDARD SPECIFICATIONS.

4) ELASTOMIC PADS & STEEL-REINFORCED ELASTOMERIC BEARING PADS ARE TO BE AS SPECIFIED IN THE PLANS AND SPECIFICATIONS, AND SHALL BE PROVIDED AT END OF ALL GIRDERS UNLESS AN ALTERNATE TYPE OF BEARING IS SPECIFICALLY PROVIDED. IF NO BEARING PAD DETAIL IS PROVIDED IN THE PLANS, THE SIZE, THICKNESS OF ELASTOMER LAYERS, STEEL SHIM PLATES, AND PROPERTIES OF ELASTOMER SHALL BE AS SPECIFIED BY THE ENGINEER. IN ALL CASES, ALL COSTS ASSOCIATED WITH THE MANUFACTURE, TESTING, SHIPPING, AND PLACEMENT OF BEARINGS ARE TO BE INCLUDED IN THE PRICE BID FOR CONCRETE GIRDERS. NO ADDITIONAL COMPENSATION WILL BE MADE FOR PROJECTS IN WHICH THE BEARING PADS ARE AS SPECIFIED BY THE ENGINEER.

STATE OF LOUISIANA
JENAN NAKHLEH
REG. No. 18692
REGISTERED PROFESSIONAL ENGINEER IN CIVIL ENGINEERING
9/4/2012

STATE OF LOUISIANA
GERALD G. MENARD
License No. 20437
PROFESSIONAL ENGINEER IN CIVIL ENGINEERING
9/10/2020

THESE STANDARD PLANS HAVE BEEN PROPERLY EXAMINED BY ME, THE UNDERSIGNED PROFESSIONAL ENGINEER. I HAVE DETERMINED THAT THESE PLANS COMPLY WITH ALL APPLICABLE CODES AND HAVE BEEN PROPERLY ADAPTED TO USE ON THIS PROJECT.

*** GIRDER TYPE II - IV SHOWN. GIRDER TTYPE BT-72 SIMILAR EXCEPT AS SHOWN.**

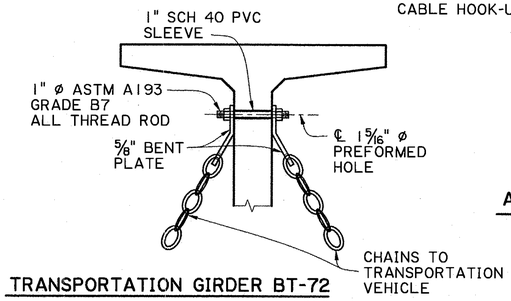

TRANSPORTATION GIRDER BT-72

1. FIELD DRILLING OF HOLES IS NOT PERMITTED.
2. NUMBER & LOCATION OF HOLES TO BE SHOWN ON SHOP DRAWINGS.
3. SUGGESTED METHOD SHOWN ABOVE. CONTRACTOR TO SUBMIT HIS METHOD FOR REVIEW & APPROVAL.

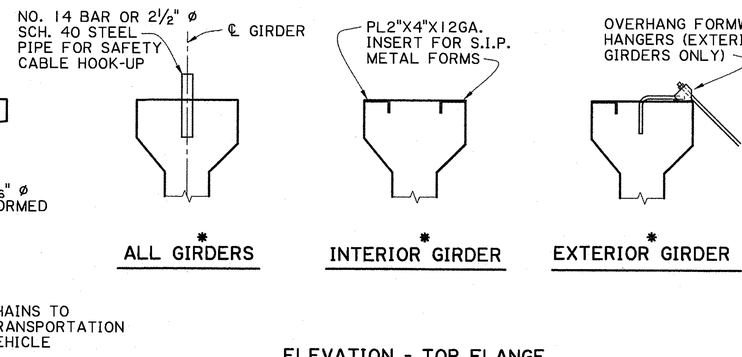

* ALL GIRDERS | * INTERIOR GIRDER | * EXTERIOR GIRDER

ELEVATION - TOP FLANGE SHOWING MISC. ATTACHMENTS

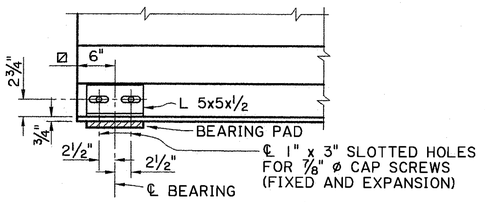

PART ELEVATION OF GIRDER END AT JOINT *

SHEET NUMBER 282

PARISH	CONTROL SECTION	STATE PROJECT

DESIGNED	C. DELATOUR
CHECKED	
DETAILED	J. NAKHLEH
CHECKED	
SERIES NUMBER	03-05-2001 3 OF 5

REVISION OR CHANGE ORDER DESCRIPTION | BY | NO. | DATE

MISC. SPAN AND GIRDER DETAILS
(GIRDER HARDWARE AND BEARING PADS)
STANDARD DETAIL MISC. SPAN AND GIRDER DETAILS

STATE OF LOUISIANA DEPARTMENT OF TRANSPORTATION AND DEVELOPMENT

CHECK PRINTS
9/4/2012 10:48
IP_PWP:dms31588\msgspan4 (Vector).dgn

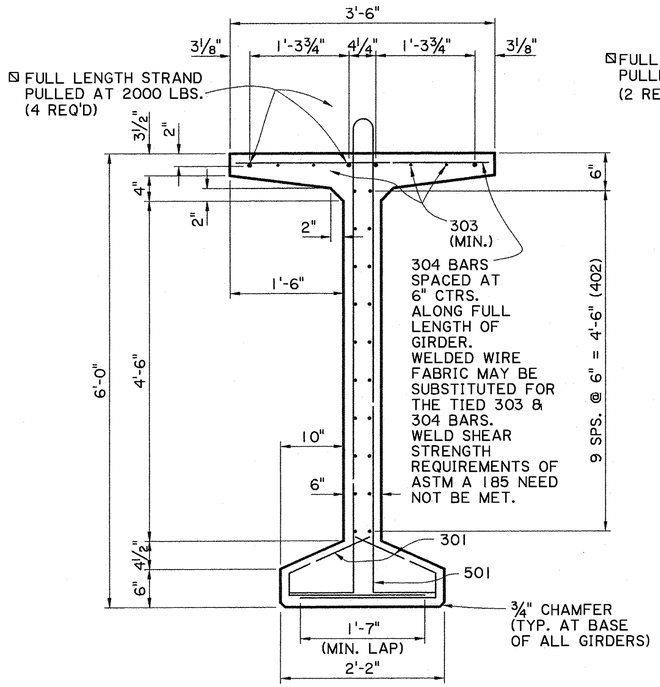

TYPE BT-72
(SHOWING END REINFORCEMENT)

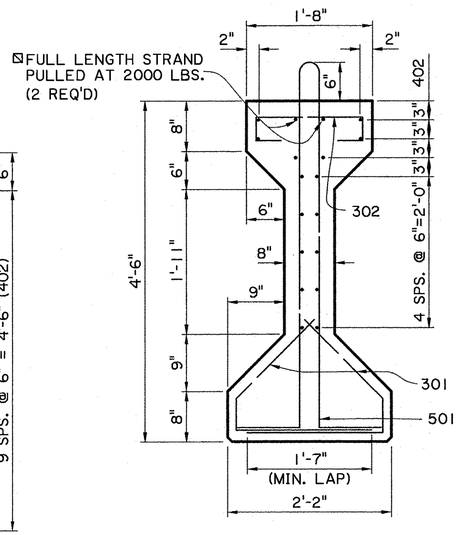

TYPE IV
(SHOWING END REINFORCEMENT)

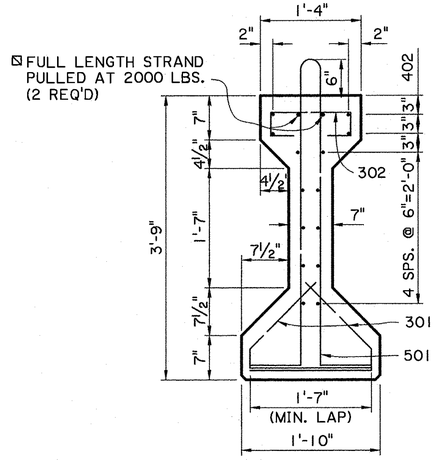

TYPE III
(SHOWING END REINFORCEMENT)

PRESTRESSED GIRDER NOTES

FABRICATION TOLERANCES, STRESSING AND DETENSIONING OF THE PRECAST-PRESTRESSED CONCRETE GIRDERS SHALL BE AS SPECIFIED IN THE "MANUAL FOR QUALITY CONTROL FOR PLANTS AND PRODUCTION OF STRUCTURAL PRECAST CONCRETE PRODUCTS (MNL-116, LATEST EDITION)" PUBLISHED BY PCI.

PRESTRESSING STEEL SHALL BE ½"ø NOMINAL DIAMETER, UNCOATED, SEVEN-WIRE STRANDS, GRADE 270, CONFORMING TO ASTM DESIGNATION A 416M. THE STRANDS SHALL BE LOW-RELAXATION WITH AN INITIAL APPLIED FORCE OF 30,980 POUNDS.

CONCRETE IN PRECAST-PRESTRESSED CONCRETE GIRDERS SHALL BE EITHER CLASS P CONCRETE WITH A MINIMUM COMPRESSIVE STRENGTH OF 4,000 P.S.I. AT RELEASE OF STRANDS AND 5,000 P.S.I. AT 28 DAYS, OR CLASS P(M) CONCRETE WITH A MINIMUM COMPRESSIVE STRENGTH OF 4,500 P.S.I. AT RELEASE OF STRANDS AND 6,000 P.S.I. AT 28 DAYS, OR CLASS P(X) CONCRETE WITH A MINIMUM COMPRESSIVE STRENGTH OF 5,500 PSI AT RELEASE OF STRANDS AND 7,500 PSI AT 28 DAYS, OR AS CALLED FOR IN THE PLANS.

THE CONTRACTOR SHALL SUBMIT A METHOD OF HOLDING DRAPED STRANDS IN PLACE AND SHALL SUBMIT METHOD AND SCHEDULE FOR RELEASE OF HOLD-DOWNS AND CABLE STRAND TO THE BRIDGE DESIGN ENGINEER FOR APPROVAL. PRESTRESSED GIRDERS SHALL BE MAINTAINED IN AN UPRIGHT POSITION AT ALL TIMES DURING STORAGE AND HANDLING AND MUST BE SUPPORTED FROM POINTS WITHIN 3'-0" OF GIRDER ENDS. DISREGARDING THIS REQUIREMENT MAY LEAD TO COLLAPSE OF THE MEMBER.

DIMENSIONS SHOWN ON REINFORCING BAR DETAILS ARE OUT-TO-OUT OF BAR. REINFORCING STEEL FOR PRECAST-PRESTRESSED CONCRETE GIRDERS SHALL BE FABRICATED TO CLOSE DIMENSIONAL TOLERANCES TO PROVIDE ONE (1) INCH MINIMUM CLEARANCE FROM EDGE OF BAR TO FACE OF GIRDER.

CONTRACTOR SHOULD NOTE THAT THE CAMBER SHOWN ELSEWHERE IN THE PLANS IS APPROXIMATE AND ASSUMES DECK PLACEMENT 90 DAYS AFTER STRAND RELEASE. THE CONTRACTOR SHOULD ATTEMPT TO HAVE THE GIRDERS CAST NO MORE THAN 90 DAYS BEFORE DECK PLACEMENT. ANY ADJUSTMENTS TO THE PROJECT THAT ARE REQUIRED DUE TO AN INCREASE IN CAMBER FROM THE VALUES SHOWN IS THE CONTRACTOR'S RESPONSIBILITY AND COST.

BIDS WILL BE TAKEN PER LINEAR FOOT OF PRECAST-PRESTRESSED CONCRETE GIRDER IN PLACE. THE BID PRICE PER LINEAR FOOT OF GIRDER IN PLACE SHALL INCLUDE THE COST OF ALL MATERIALS AND LABOR REQUIRED TO MANUFACTURE AND ERECT THE GIRDER AS SHOWN ON THE DESIGN DRAWINGS. THE FOLLOWING MATERIALS ARE TO BE PAID FOR IN THE PRICE BID PER LINEAR FOOT OF GIRDER:

CLASS P, P(M), AND P(X) CONCRETE, REINFORCING STEEL AND PRESTRESSING STRANDS, BOLTS, NUTS AND WASHERS FOR END DAM ANCHORAGE, BEARING PADS, THREADED INSERTS, COIL INSERTS, WASHERS, CAP SCREWS AND L 5x5x½ AT BEARING ASSEMBLY.

PRESTRESSING STRANDS STRESSED TO A MAXIMUM OF 2,000 POUNDS MAY BE SUBSTITUTED FOR BARS 303.

☒ FULL LENGTH STRANDS ARE GENERALLY PULLED TO 2,000 POUNDS BUT MAY BE PULLED UP TO 5,400 POUNDS TO REDUCE UNDESIRABLE SAG.

TYPE II
(SHOWING END REINFORCEMENT)

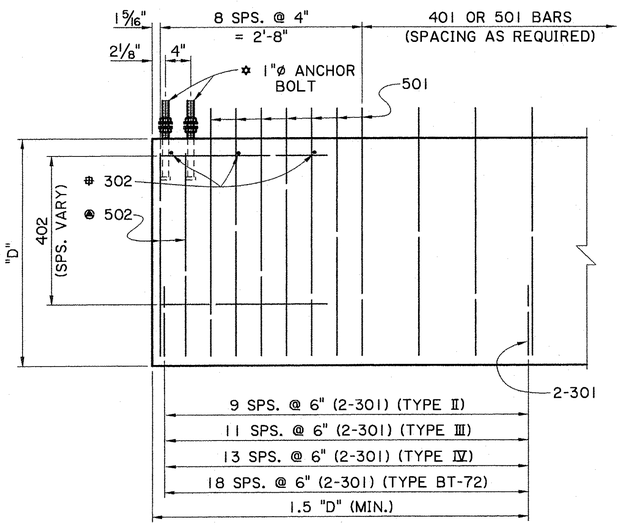

TYPICAL GIRDER END

⊛ USE 501 IN LIEU OF 502 @ CONTINUITY ENDS OF GIRDERS.

⊕ 3-302 REQUIRED AT EACH END OF GIRDER FOR TYPE III & IV

✡ USE 1 (ONE) ANCHOR BOLT FOR END DAM TYPE JOINT
USE 2 (TWO) ANCHOR BOLTS FOR STRIP SEAL TYPE JOINT
OMIT ANCHOR BOLTS AT CONTINUITY ENDS

STATE OF LOUISIANA — JENAN NAKHLEH — REG. No. 18692 — REGISTERED PROFESSIONAL ENGINEER IN CIVIL ENGINEERING — 9/4/2012

STATE OF LOUISIANA — GERALD G. MENARD — License No. 20437 — PROFESSIONAL ENGINEER IN CIVIL ENGINEERING — 9/10/2012

THESE STANDARD PLANS HAVE BEEN PROPERLY EXAMINED BY ME, THE UNDERSIGNED PROFESSIONAL ENGINEER. I HAVE DETERMINED THAT THESE PLANS COMPLY WITH ALL APPLICABLE CODES AND HAVE BEEN PROPERLY ADAPTED TO USE ON THIS PROJECT.

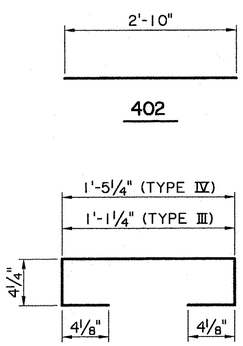

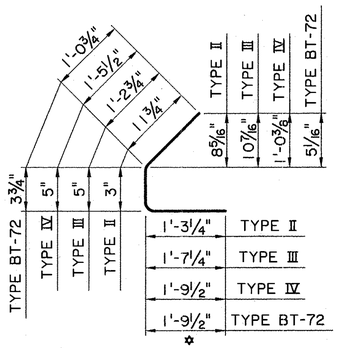

✡ MINIMUM LAP (SEE GIRDER SECTIONS) WILL REQUIRE ADJUSTMENT TO STANDARD BAR DIMENSIONS IN HIGH SKEW ENDS.

DETAIL SCALE: 1" = 1'-0"

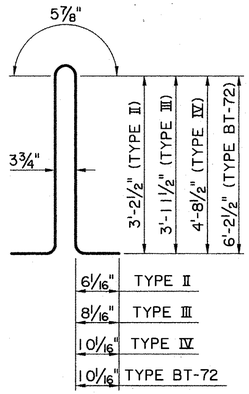

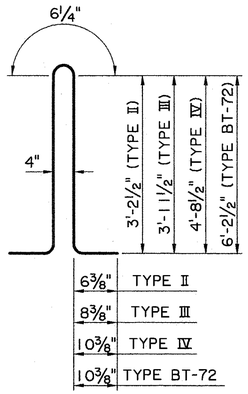

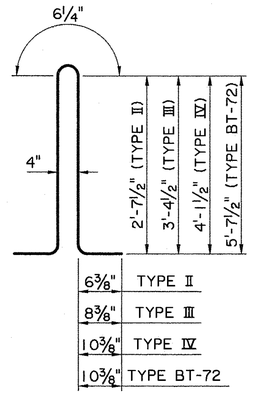

SHEET NUMBER	283
PARISH	CONTROL SECTION	STATE PROJECT
DESIGNED / CHECKED	C. deLATOUR / J. NAKHLEH	03-05-2001
DETAILED / CHECKED	SERIES NUMBER	4 OF 5

NO.	DATE	REVISION OR CHANGE ORDER DESCRIPTION	BY

MISC. SPAN AND GIRDER DETAILS
(MISC. SPAN & GIRDER DETAILS MILD STEEL REINFORCEMENT)
STANDARDS DETAIL: MISC. SPAN AND GIRDER DETAILS

CHECK PRINTS
9/4/2012 10:50
IP_PWP:dms31588\msgspan5 (Vector).dgn

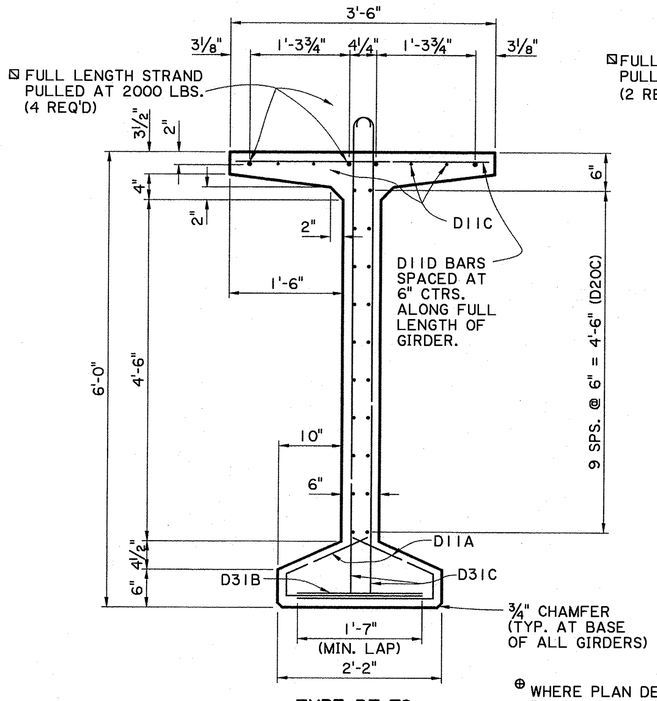

TYPE BT-72
(SHOWING END REINFORCEMENT)

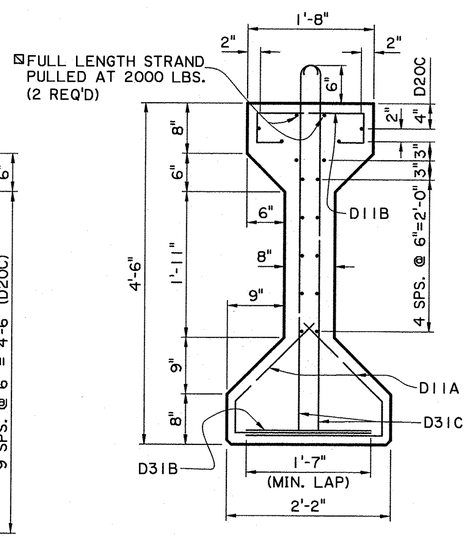

TYPE IV
(SHOWING END REINFORCEMENT)

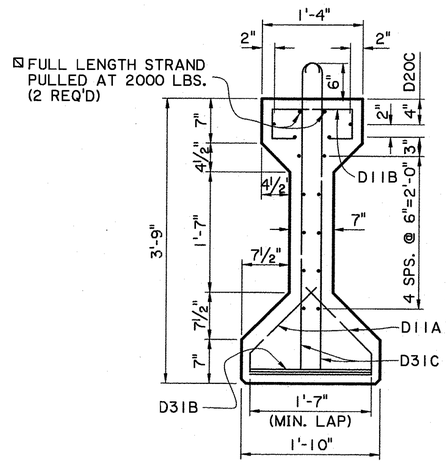

TYPE III
(SHOWING END REINFORCEMENT)

PRESTRESSED GIRDER NOTES

FABRICATION TOLERANCES, STRESSING AND DETENSIONING OF THE PRECAST-PRESTRESSED CONCRETE GIRDERS SHALL BE AS SPECIFIED IN THE "MANUAL FOR QUALITY CONTROL FOR PLANTS AND PRODUCTION OF STRUCTURAL PRECAST CONCRETE PRODUCTS (MNL-116, LATEST EDITION)" PUBLISHED BY PCI.

PRESTRESSING STEEL SHALL BE ½"ø NOMINAL DIAMETER, UNCOATED, SEVEN-WIRE STRANDS, GRADE 270, CONFORMING TO ASTM DESIGNATION A 416M. THE STRANDS SHALL BE LOW-RELAXATION WITH AN INITIAL APPLIED FORCE OF 30,980 POUNDS.

CONCRETE IN PRECAST-PRESTRESSED CONCRETE GIRDERS SHALL BE EITHER CLASS P CONCRETE WITH A MINIMUM COMPRESSIVE STRENGTH OF 4,000 P.S.I. AT RELEASE OF STRANDS AND 5,000 P.S.I. AT 28 DAYS, OR CLASS P(M) CONCRETE WITH A MINIMUM COMPRESSIVE STRENGTH OF 4,500 P.S.I. AT RELEASE OF STRANDS AND 6,000 P.S.I. AT 28 DAYS, OR CLASS P(X) CONCRETE WITH A MINIMUM COMPRESSIVE STRENGTH OF 5,500 PSI AT RELEASE OF STRANDS AND 7,500 PSI AT 28 DAYS, OR AS CALLED FOR IN THE PLANS.

THE CONTRACTOR SHALL SUBMIT A METHOD OF HOLDING DRAPED STRANDS IN PLACE AND SHALL SUBMIT METHOD AND SCHEDULE FOR RELEASE OF HOLD-DOWNS AND CABLE STRAND TO THE BRIDGE DESIGN ENGINEER FOR APPROVAL. PRESTRESSED GIRDERS SHALL BE MAINTAINED IN AN UPRIGHT POSITION AT ALL TIMES DURING STORAGE AND HANDLING AND MUST BE SUPPORTED FROM POINTS WITHIN 3'-0" OF GIRDER ENDS. DISREGARDING THIS REQUIREMENT MAY LEAD TO COLLAPSE OF THE MEMBER.

WELDED WIRE FABRIC FOR PRECAST PRE-STRESSED CONCRETE GIRDERS SHALL CONFORM TO ASTM DESIGNATIONS A496 & A497. WWF SHALL BE FABRICATED TO CLOSE DIMENSIONAL TOLERANCES TO PROVIDE ONE (1) INCH MINIMUM CLEARANCE FROM EDGE OF BAR TO FACE OF GIRDER. DIMENSIONS SHOWN ON WELDED WIRE DIMENSIONS ARE OUT-TO-OUT OF BAR.

CONTRACTOR SHOULD NOTE THAT THE CAMBER SHOWN ELSEWHERE IN THE PLANS IS APPROXIMATE AND ASSUMES DECK PLACEMENT 90 DAYS AFTER STRAND RELEASE. THE CONTRACTOR SHOULD ATTEMPT TO HAVE THE GIRDERS CAST NO MORE THAN 90 DAYS BEFORE DECK PLACEMENT. ANY ADJUSTMENTS TO THE PROJECT THAT ARE REQUIRED DUE TO AN INCREASE IN CAMBER FROM THE VALUES SHOWN IS THE CONTRACTOR'S RESPONSIBILITY AND COST.

BIDS WILL BE TAKEN PER LINEAR FOOT OF PRECAST-PRESTRESSED CONCRETE GIRDER IN PLACE. THE BID PRICE PER LINEAR FOOT OF GIRDER IN PLACE SHALL INCLUDE THE COST OF ALL MATERIALS AND LABOR REQUIRED TO MANUFACTURE AND ERECT THE GIRDER AS SHOWN ON THE DESIGN DRAWINGS. THE FOLLOWING MATERIALS ARE TO BE PAID FOR IN THE PRICE BID PER LINEAR FOOT OF GIRDER:

CLASS P, P(M) & P(X) CONCRETE, WELDED WIRE FABRIC, REINFORCING STEEL & PRESTRESSING STRANDS, BOLTS, NUTS AND WASHERS FOR END DAM ANCHORAGE, BEARING PADS, THREADED INSERTS, COIL INSERTS, WASHERS, CAP SCREWS AND L 5x5x½ AT BEARING ASSEMBLY.

PRESTRESSING STRANDS STRESSED TO A MAXIMUM OF 2,000 POUNDS MAY BE SUBSTITUTED FOR WWF BARS D11C.

⊠ FULL LENGTH STRANDS ARE GENERALLY PULLED TO 2,000 POUNDS BUT MAY BE PULLED UP TO 5,400 POUNDS TO REDUCE UNDESIRABLE SAG.

⊕ WHERE PLAN DETAILS SHOW MILD REINFORCING BARS ONLY, THE WWF WIRE SPACING & SIZE SHALL MATCH THE REBAR SPACING & SIZE ON A ONE TO ONE BASIS.

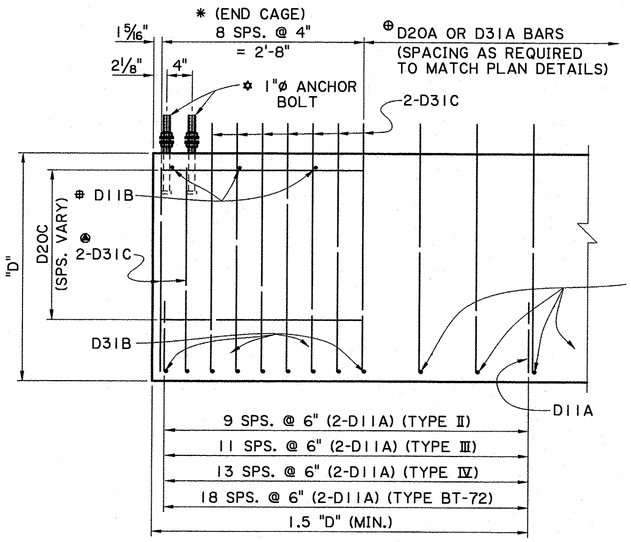

TYPICAL GIRDER END

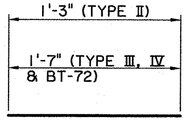

D20B & D31B

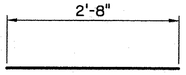

D20C

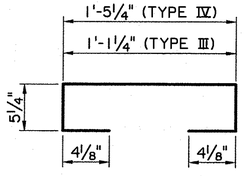

D11B
(1½" ø PIN)

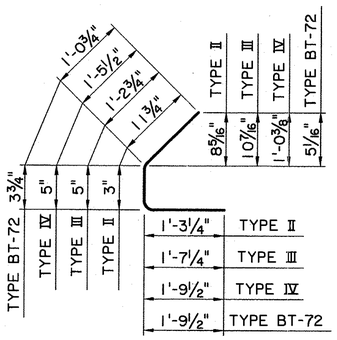

D11A
(1½"ø PIN)

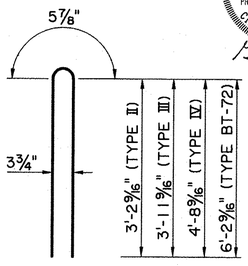

D20A
(2¾"ø PIN)

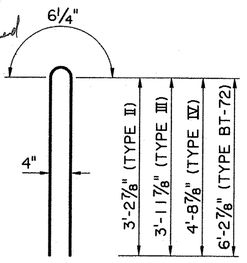

D31A
(2¾"ø PIN)

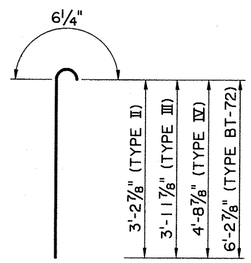

D31C
(2¾"ø PIN)

✡ D31C BARS SHORTENED BY 7" AT ANCHOR BOLT LOCATIONS

D11B BARS REQUIRED AT EACH END OF GIRDER FOR TYPE III & IV

✡ USE 1 (ONE) ANCHOR BOLT FOR END DAM TYPE JOINT
USE 2 (TWO) ANCHOR BOLTS FOR STRIP SEAL TYPE JOINT
OMIT ANCHOR BOLTS AT CONTINUITY ENDS

* AT SKEWED END BENTS & TRANSITION BENTS, MILD STEEL REINFORCEMENT IN LIEU OF WWF BARS D11A, D31B & D31C, SHALL BE USED FOR END CAGE ONLY. SEE SHEETS 3 & 4 OF 5

DETAIL SCALE: 1" = 1'-0"

STATE OF LOUISIANA
JENAN NAKHLEH
REG. No. 18692
REGISTERED PROFESSIONAL ENGINEER IN CIVIL ENGINEERING
9/4/2012

STATE OF LOUISIANA
GERALD G. MENARD
License No. 20437
PROFESSIONAL ENGINEER IN CIVIL ENGINEERING
9/10/2012

THESE STANDARD PLANS HAVE BEEN PROPERLY EXAMINED BY ME, THE UNDERSIGNED PROFESSIONAL ENGINEER. I HAVE DETERMINED THAT THESE PLANS COMPLY WITH ALL APPLICABLE CODES AND HAVE BEEN PROPERLY ADAPTED TO USE ON THIS PROJECT.

SHEET NUMBER	284
PARISH	CONTROL SECTION	STATE PROJECT
DESIGNED / CHECKED	C. deLATOUR / J. NAKHLEH	09-30-2003
DETAILED / CHECKED	SERIES NUMBER	5 OF 5

NO.	DATE	REVISION OR CHANGE ORDER DESCRIPTION	BY

MISC. SPAN AND GIRDER DETAILS
(MISC. SPAN & GIRDER DETAILS, WELDED WIRE FABRIC REINFORCEMENT)
STANDARDS DETAIL: MISC. SPAN AND GIRDER DETAILS

06-JAN-2009 07:53

IP_PWP:dms31591\Strip Seal Joint (1 of 2).dgn

WATSON-BOWMAN/ACME
STEEL EXTRUSIONS

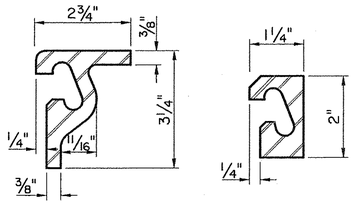

TYPE M

TYPE A
(CURB USE ONLY)

D.S.BROWN
STEEL EXTRUSIONS

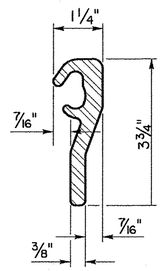

TYPE SSCM 2

NEOPRENE EXTRUSIONS



TYPE SE 400

NEOPRENE EXTRUSIONS



A2R SEAL

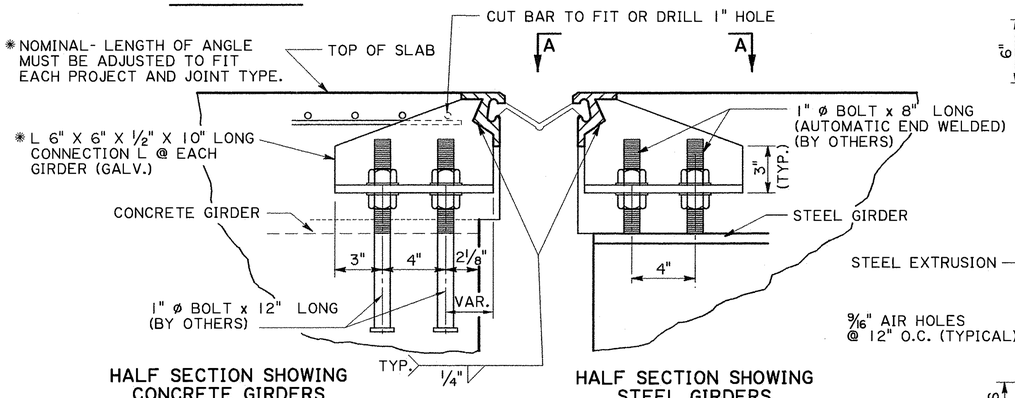

HALF SECTION SHOWING CONCRETE GIRDERS

HALF SECTION SHOWING STEEL GIRDERS

TYPICAL SECTION AT GIRDERS

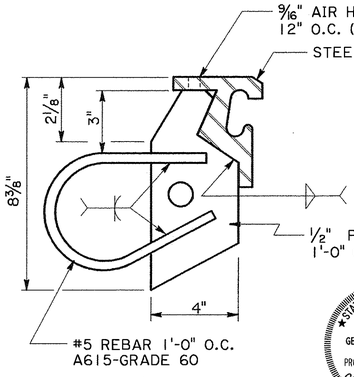

ALTERNATE SECTION BETWEEN GIRDERS

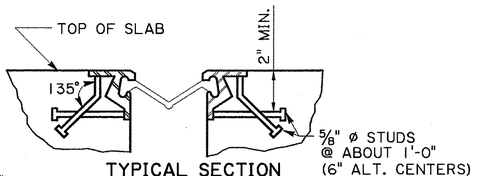

TYPICAL SECTION BETWEEN GIRDERS

STATE OF LOUISIANA
GERALD G. MENARD
License No. 20437
PROFESSIONAL ENGINEER
IN
CIVIL ENGINEERING
9/10/2020

THESE STANDARD PLANS HAVE BEEN PROPERLY EXAMINED BY ME, THE UNDERSIGNED PROFESSIONAL ENGINEER. I HAVE DETERMINED THAT THESE PLANS COMPLY WITH ALL APPLICABLE CODES AND HAVE BEEN PROPERLY ADAPTED TO USE ON THIS PROJECT.

INSTALLATION :

CONDITION 1:

DECKS ON EACH SIDE OF JOINT POURED AT DIFFERENT TIME INTERVALS

A-PLACE JOINT IN PLACE AS A UNIT (SPACER STILL IN PLACE).
B-ADJUST TO PROPER VERTICAL POSITION.
C-POUR DECK THAT IS TO BE POURED FIRST.
D-PRIOR TO POURING THE ADJACENT DECK, REMOVE SPACER.
E-JUST PRIOR TO POURING THE ADJACENT DECK, SET JOINT TO PROPER OPENING RELATIVE TO THE CURRENT TEMPERATURE FROM THE DESIGN TEMPERATURE OF 68° F

CONDITION 2:

DECKS ON EACH SIDE OF JOINT POURED SIMULTANEOUSLY.

A-PLACE JOINT IN PLACE AS A UNIT (SPACER STILL IN PLACE).
B-ADJUST TO PROPER VERTICAL POSITION.
C-PRIOR TO POURING DECKS, REMOVE SPACER
D-JUST PRIOR TO POURING DECKS, SET JOINT TO PROPER OPENING RELATIVE TO THE CURRENT TEMPERATURE, FROM THE DESIGN TEMPERATURE OF 68° F

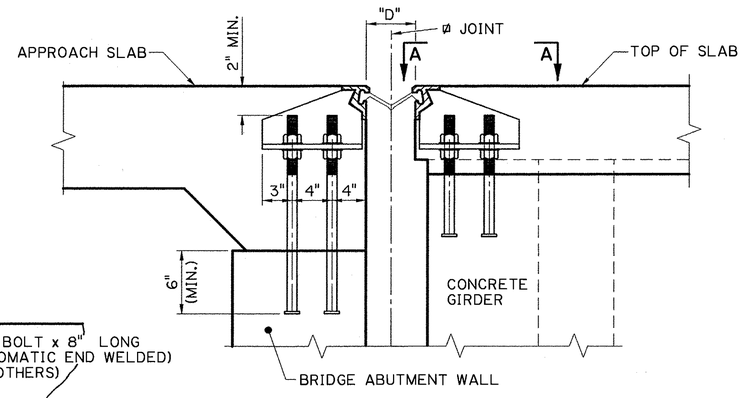

TYPICAL SECTION AT BRIDGE END

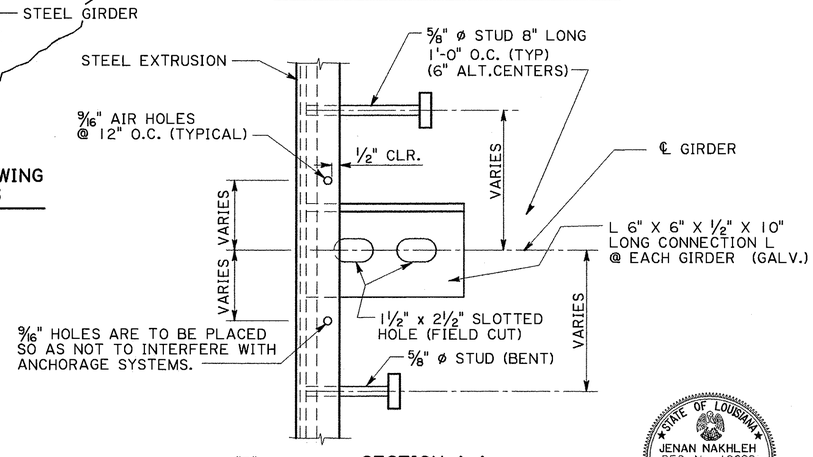

SECTION A-A

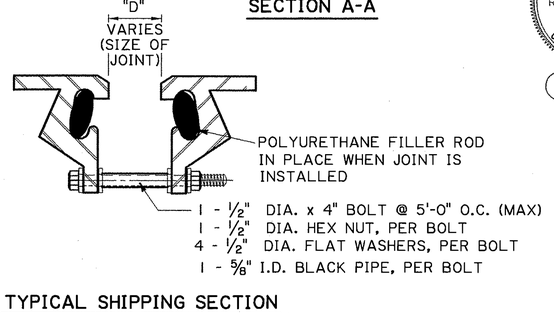

TYPICAL SHIPPING SECTION

STATE OF LOUISIANA
JENAN NAKHLEH
REG. No. 18692
REGISTERED
PROFESSIONAL ENGINEER
IN
CIVIL ENGINEERING
1/8/2009

NOTES:

1. THE FOLLOWING MATERIALS ARE TO BE PAID FOR IN THE BID PRICE PER LINEAR FOOT OF " STRIP SEAL".
   A. NEOPRENE EXTRUSION
   B. STEEL EXTRUSIONS
   C. ⅝" DIAMETER STUDS
   D. ALL STEEL PLATES REQUIRED FOR BARRIER SECTION
   E. CAP SCREWS AND NUTS, TEMPORARY STEEL SPACER BLOCKS AND POLYURETHANE FILLER ROD.
   F. 6" x 6" x ⅜" x 6" CONNECTION PLATES.
   G. No. 5 REBAR AND ½" PLATE.
2. STRUCTURAL STEEL SHALL CONFORM TO ASTM A-709, GRADE 36 OR GRADE 50.
3. THE MANUFACTURER'S RECOMMENDED CONSTRUCTION METHODS SHALL BE FOLLOWED.
4. A FACTORY REPRESENTATIVE IS TO BE PRESENT DURING THE INSTALLATION OF THE JOINT.
5. SHOP DETAILS OF JOINTS SHALL BE SUBMITTED FOR APPROVAL PRIOR TO FABRICATION.
6. STEEL EXTRUSIONS SHALL BE SHIPPED IN PAIRS.
7. POLYURETHANE FILLER ROD WILL BE PLACED IN STEEL EXTRUSION'S CAVITY PRIOR TO SHIPMENT. THIS ROD WILL BE REMOVED ONLY WHEN THE NEOPRENE EXTRUSION IS TO BE INSTALLED IN PLACE.
8. ALL WELDS SHALL CONFORM TO AWS D1.5-95 BRIDGE STRUCTURAL WELDING CODE AND D1.4-92 REINFORCING STEEL WELDING CODE.
9. WELDED SPLICES OF STEEL EXTRUSIONS SHALL BE SHOP SPLICES AND EACH PORTION OF THE EXTRUSION SHALL BE NOT LESS THAN 15 FEET IN LENGTH EXCEPT THAT ONE SECTION, NOT LESS THAN 4 FEET IN LENGTH WILL BE ALLOWED IN THE SHOULDER AREA IF REQUIRED TO MATCH THE ROADWAY CROSS SECTION. ALL SPLICES SHALL BE MADE SO AS TO OCCUR OUTSIDE THE WHEEL PATHS. (SEE DETAIL ON SHEET 2 OF 2.)
   IF A SECTION LESS THAN 15 FEET IS USED, THE CONNECTION STUDS WILL BE SPACED AT 9 INCH ALTERNATE CENTERS. ALL SPLICE LOCATIONS WILL BE SHOWN ON THE SHOP DRAWINGS. DRAWINGS WILL NOT BE APPROVED UNLESS THE LOCATIONS ARE DESIGNATED ON THE DRAWINGS. THE LOCATIONS MAY BE DESIGNATED WITH A +/- 6 INCH TOLERANCE. WELDED SPLICES ARE ALSO REQUIRED WHERE TWO DIFFERENT STEEL SHAPES ARE JOINED AT THE CURB AREA AND WHERE THE CURB UNITS ARE TURNED UP.
   WELDED SPLICES WILL BE BUTT SPLICES AND CARE SHALL BE TAKEN NOT TO ALLOW WELD METAL TO INVADE THE GLAND CAVITY. WELD MATERIAL IN THE CAVITY WILL BE CAUSE FOR REJECTION. CONNECTION STUDS WILL BE LOCATED 3 INCHES EITHER SIDE OF WELDED SPLICES.
10. NEOPRENE EXTRUSIONS HAVE TO BE MANUFACTURED AS A CONTINUOUS PIECE WITH ONLY ONE (1) SHOP SPLICE PER JOINT ALLOWED WHEN LENGTH EXCEEDS 50 FEET. THE NEOPRENE STRIP SEAL SHALL BE AN EXTRUDED NEOPRENE MATERIAL CONFORMING TO ASTM DESIGNATION: D2628 MODIFIED TO OMIT RECOVERY TEST TO REVISE THE REQUIRED TYPE A HARDNESS TO 55 -5/+10 AS DETERMINED BY ASTM D2240.
11. SEAL SHALL BE BONDED TO STEEL WITH A PRE-MIXED LUBRICATING ADHESIVE SOLUTION WHICH SHALL BE USED TO FACILITATE THE SEAL INSTALLATION. THIS LUBRICANT ADHESIVE SHALL BE SELECTED FROM THE LA. DOTD QUALIFIED PRODUCTS LIST, AS MAINTAINED BY THE DEPARTMENT'S MATERIALS SECTION. THE LUBRICANT SHOULD FLOW FREELY AND EVENLY COAT THE SEAL AND JOINT FACE. THE LUBRICANT SHOULD COMPLETELY COAT THE SEAL AND STEEL EXTRUSION CAVITY WHICH REMAIN IN CONTACT.
12. AFTER METAL SURFACES HAVE BEEN PREPARED FOR PAINTING AND PRIOR TO PAINTING, THE POLYURETHANE FILLER RODS ARE TO BE PLACED IN THE EXTRUSIONS. ALL METAL SURFACES NOT EMBEDDED IN CONCRETE SHALL BE SHOP PAINTED WITH TWO COATS OF AN APPROVED ZINC PAINT SYSTEM FROM QPL NO. 78, EXCEPT FOR THE STEEL PLATES REQUIRED FOR THE BARRIER SECTION, WHICH SHALL RECEIVE THREE COATS. THE STEEL EXTRUSION CAVITY MAY NOT BE PAINTED. IF PAINTED, CARE SHALL BE TAKEN THAT A PAINT BUILD-UP DOES NOT OCCUR IN THE BOTTOM.
13. IN LIEU OF PAINTING, EXPANSION JOINT ASSEMBLIES MAY BE HOT-DIP GALVANIZED AFTER FABRICATION AND ALL SHOP WELDING OPERATIONS, (INCLUDING STUD WELDING) HAVE BEEN COMPLETE, IN ACCORDANCE WITH SECTION 811 OF THE STANDARD SPECIFICATIONS. CARE SHALL BE TAKEN THAT A COATING BUILD-UP DOES NOT OCCUR IN THE BOTTOM OF THE CAVITY.
14. JOINTS UP TO FIFTY FOUR (54') FEET IN LENGTH SHALL BE DELIVERED TO THE JOB SITE IN ONE PIECE. JOINTS OVER FIFTY FOUR (54') FEET IN LENGTH MAY HAVE PROVISIONS FOR A FIELD SPLICE IN THE STEEL EXTRUSIONS PROVIDING THE SPLICE IS PERFORMED IN SHOP LIKE CONDITIONS IN THE PRESENCE OF A STATE INSPECTOR AND MEET THE REQUIREMENTS OF NOTE 8 ABOVE. ALL OTHER WELDED SPLICES OF STEEL EXTRUSIONS SHALL BE SHOP SPLICES.
15. ALL STUDS SHALL BE BENT PRIOR TO WELDING TO THE JOINT. NO FIELD BENDING OF STUDS WILL BE ALLOWED.
16. ALL LABOR, MATERIALS, EQUIPMENT, MANUFACTURER SUPERVISION AND INCIDENTALS PERTAINING TO THE INSTALLATION OF THE JOINT SHALL BE PAID FOR UNDER ITEM STRIP SEAL JOINTS, PER LINEAR FOOT. MEASUREMENT SHALL BE ALONG THE CENTERLINE OF THE JOINT, FROM GUTTER LINE TO GUTTER LINE ONLY, UNLESS SPECIFIED OTHERWISE IN THE PLANS.

SHEET NUMBER 285

PARISH	FEDERAL PROJECT	STATE PROJECT
DESIGNED J. NAKHLEH CHECKED A. NWAFOR	DETAILED C. deLATOUR CHECKED J. NAKHLEH	DATE 03-14-02 SHEET 1 OF 2

NO.	DATE	REVISION DESCRIPTION	BY

STRIP SEAL JOINT DETAILS (4")

SSJ-4
SPECIAL DETAILS

BRIDGE AND STRUCTURAL DESIGN

06-JAN-2009 08:01
IP_PWP:dms31591\Strip Seal Joint (2 of 2).dgn

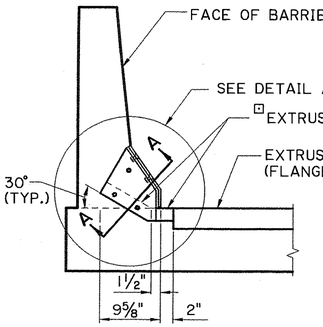

BARRIER SECTION ALT. 1
(LOW SIDE ONLY)

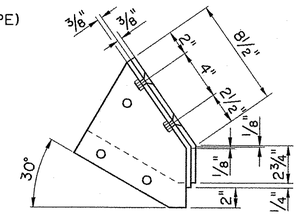

DETAIL A
(SEAL NOT SHOWN)

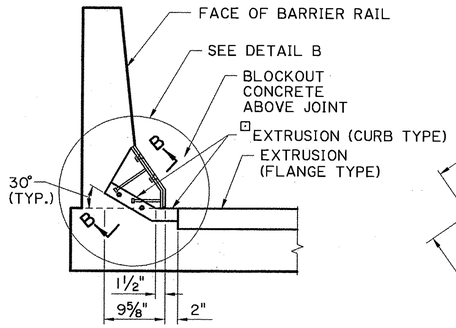

BARRIER SECTION ALT. 2
(LOW SIDE ONLY)

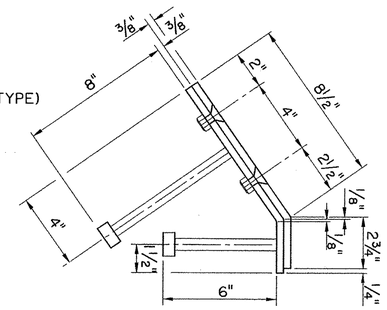

DETAIL B
(SEAL NOT SHOWN)

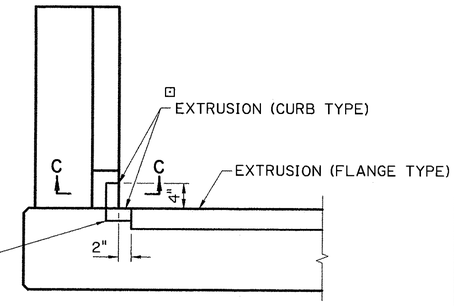

SPECIAL SEAL SECTION REQUIRED FOR 90° VERTICAL SKEW. ALL SPLICES TO BE HEAT VULCANIZED IN FACTORY.

BARRIER SECTION
(QUAD BEAM SPANS @ END BENTS)
(LOW SIDE ONLY)

⊡ FLANGE TYPE EXTRUSION MAY BE USED IN LIEU OF CURB TYPE EXTRUSION IF SITE CONDITIONS PERMIT.

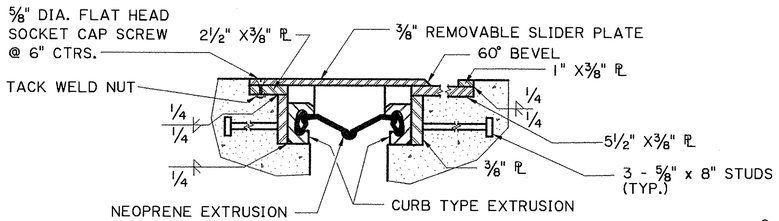

SECTION A-A

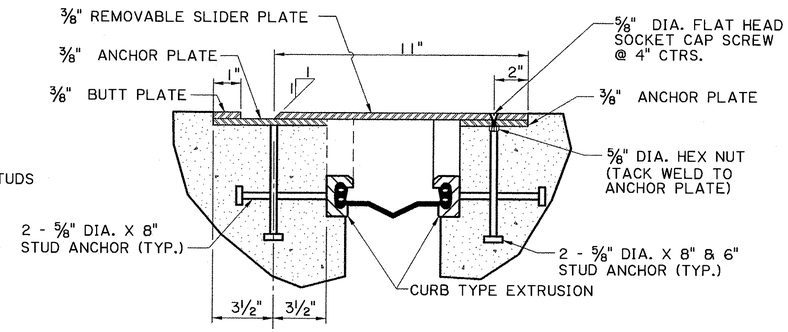

SECTION B-B

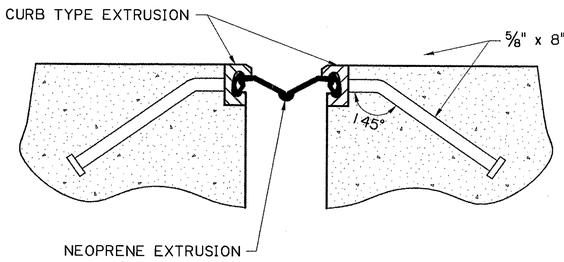

SECTION C-C

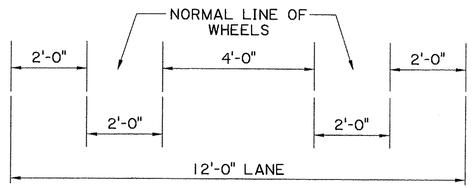

DIMENSIONS SHOWN ARE NORMAL TO ROADWAY WHEN JOINT IS PLACED ON SKEW THE DIMENSIONS SHOWN WILL VARY TO MEET THE SKEW DIMENSIONS ALONG THE ℄ OF THE JOINT.

SPLICE LOCATIONS

SPLICE LOCATIONS SHALL BE LOCATED SO AS NOT TO FALL IN THE "NORMAL LINE OF WHEELS" EXCEPT FOR CURB SECTIONS, ALL EXTRUSIONS SHALL BE A MINIMUM OF 15 FT. BETWEEN SPLICES EXCEPT WHEN NOTED OTHERWISE ON THE SPAN SHEET.

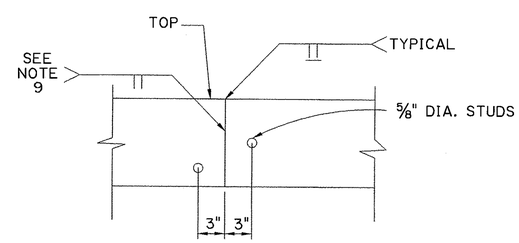

TYPICAL SPLICE

STATE OF LOUISIANA
GERALD G. MENARD
License No. 20437
PROFESSIONAL ENGINEER
IN
CIVIL ENGINEERING
9/10/2010

THESE STANDARD PLANS HAVE BEEN PROPERLY EXAMINED BY ME, THE UNDERSIGNED PROFESSIONAL ENGINEER. I HAVE DETERMINED THAT THESE PLANS COMPLY WITH ALL APPLICABLE CODES AND HAVE BEEN PROPERLY ADAPTED TO USE ON THIS PROJECT.

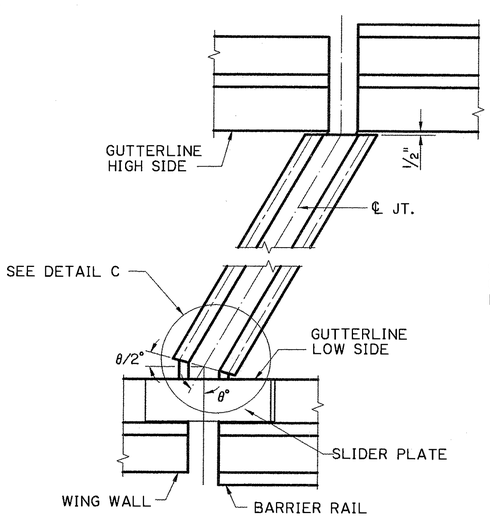

PART PLAN AT END BENTS

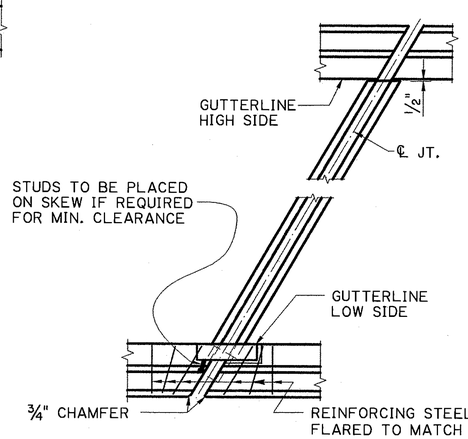

PART PLAN AT INTERIOR JOINT

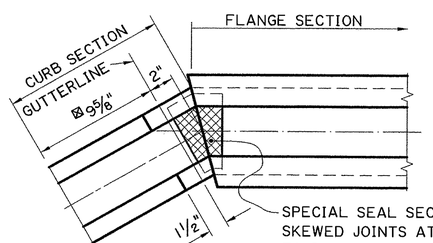

DETAIL "C"

⊠ FOR QUAD BEAM SPANS, THIS DIMENSION SHALL BE THE HEIGHT OF THE EXTRUSION.

STATE OF LOUISIANA
JENAN NAKHLEH
REG. No. 18692
PROFESSIONAL ENGINEER
IN
CIVIL ENGINEERING
1/8/2009

SHEET NUMBER	286
PARISH	
FEDERAL PROJECT	
STATE PROJECT	
DESIGNED J. NAKHLEH	
CHECKED A. NWAFOR	
DETAILED C. deLATOUR	
CHECKED J. NAKHLEH	
DATE 03-14-02	
SHEET 2 OF 2	

REVISION DESCRIPTION | BY | NO. | DATE

STRIP SEAL JOINT DETAILS (4")

SPECIAL DETAILS SSJ-4

BRIDGE AND STRUCTURAL DESIGN

14-APR-2008 09:16

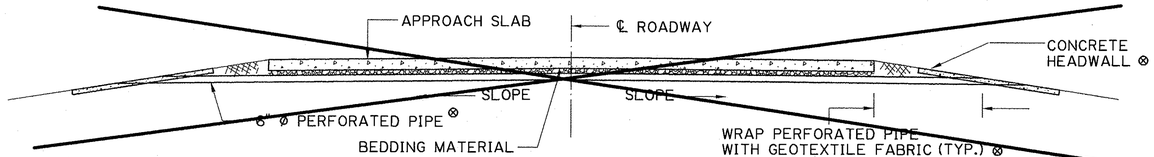

VIEW A-A

~~DETAIL SHOWN IS FOR CONNECTION TO ASPHALTIC CONCRETE PAVING (SEE ALTERNATE DETAIL WHEN CONNECTING TO P.C.C. PAVEMENT)~~

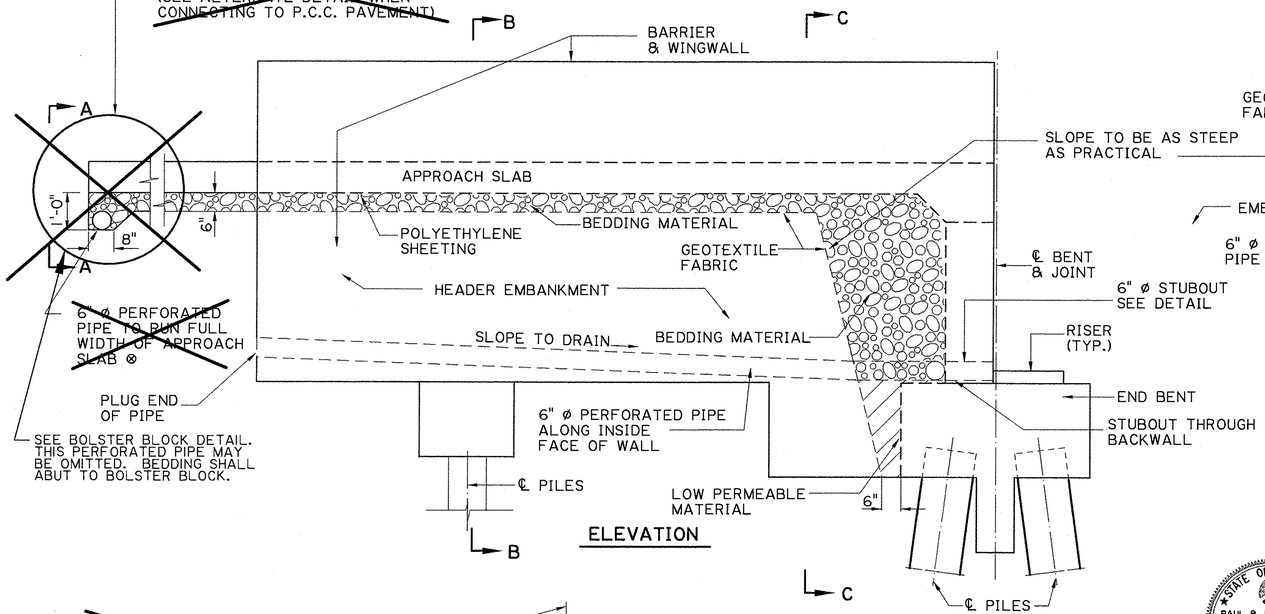

ELEVATION

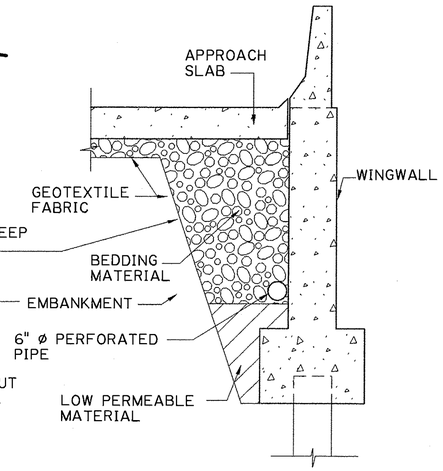

SECTION B-B

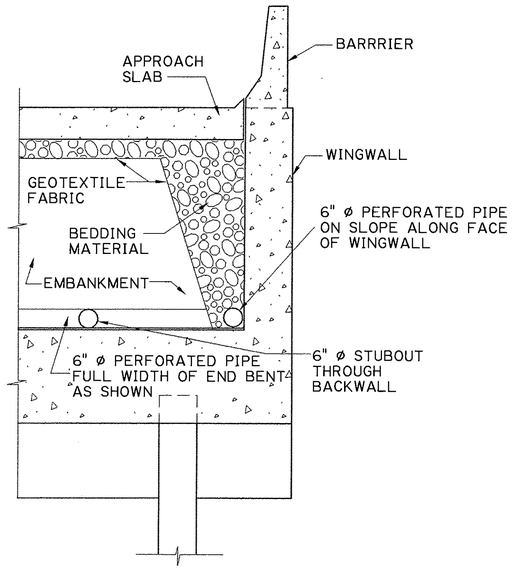

SECTION C-C

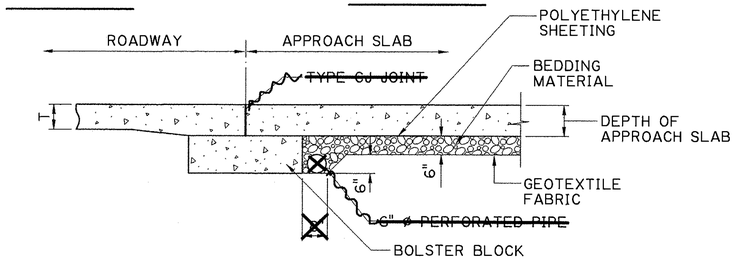

~~C J JOINT~~ - BOLSTER BLOCK ~~FOR PCC PAVEMENT ALTERNATE~~ DETAIL

~~(FOR C J JOINT DETAIL, SEE STD. PLAN CP 611)~~

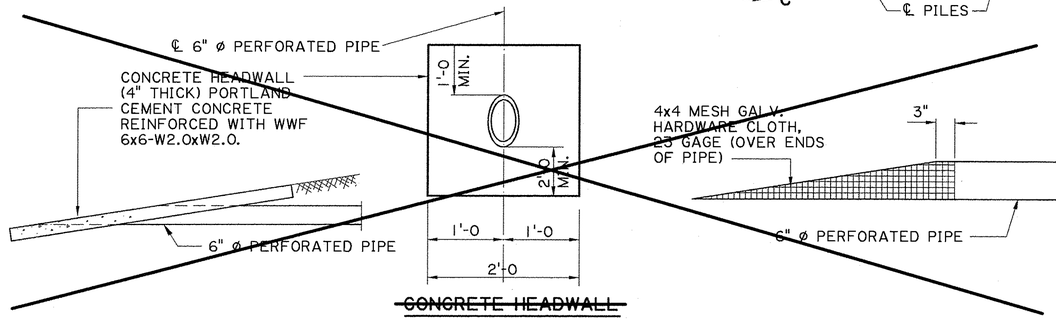

~~CONCRETE HEADWALL~~

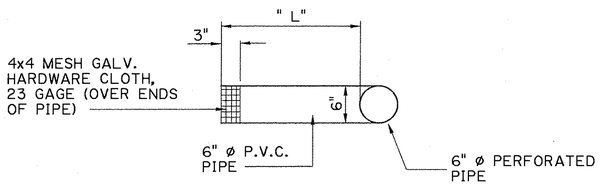

STUBOUT DETAIL

" L" IS DETERMINED BY THE THICKNESS OF THE WALLS

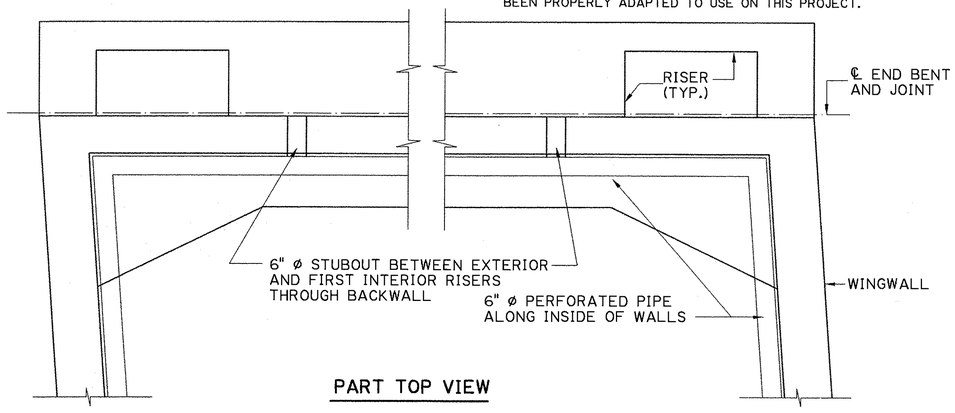

PART TOP VIEW

STATE OF LOUISIANA
PAUL B. FOSSIER, JR.
REG. No. 21028
REGISTERED PROFESSIONAL ENGINEER
IN
CIVIL ENGINEERING
8-23-00

STATE OF LOUISIANA
GERALD G. MENARD
License No. 20437
PROFESSIONAL ENGINEER
IN
CIVIL ENGINEERING
9/10/2010

THESE STANDARD PLANS HAVE BEEN PROPERLY EXAMINED BY ME, THE UNDERSIGNED PROFESSIONAL ENGINEER. I HAVE DETERMINED THAT THESE PLANS COMPLY WITH ALL APPLICABLE CODES AND HAVE BEEN PROPERLY ADAPTED TO USE ON THIS PROJECT.

NOTES:

1. LIMITS SHALL BE THE OUTER EDGES OF THE APPROACH SLAB. POLYETHYLENE SHEETING (6 MIL. THICKNESS) SHALL BE INSTALLED BETWEEN THE BEDDING MATERIAL AND APPROACH SLAB. GEOTEXTILE FABRIC SHALL BE INSTALLED DIRECTLY BELOW THE BEDDING MATERIAL

2. THE POLYETHYLENE SHEETING AND GEOTEXTILE FABRIC SHALL BE INSTALLED FOR THE ENTIRE LIMITS OF THE BACK-FILL. BEDDING MATERIAL SHALL BE UNIFORMLY COMPACTED AS DIRECTED BY THE ENGINEER. GEOTEXTILE FABRIC SHALL BE CLASS C OR D IN ACCORDANCE WITH LA DOTD QPL NO. 61, POLYETHYLENE SHEETING SHALL BE ACCORDANCE WITH SECTION 1011.01(d) OF THE STANDARD SPECIFICATIONS. BEDDING MATERIAL AS PER SECTION ~~726.~~

3. BEDDING MATERIAL, LOW PERMEABLE MATERIAL, POLYETHYLENE SHEETING, 6" ø PERFORATED PIPE, 4x4 MESH, WELDED WIRE FABRIC, CONCRETE HEADWALL AT PIPE ENDS, AND GEOTEXTILE FABRIC SHALL BE INCLUDED IN THE PRICE BID FOR ~~613.01~~ "CONCRETE APPROACH SLABS."

4. ⊗ ~~FOR ROADWAYS WITH A ONE-WAY TANGENT, THE 6" ø PIPE MAY SLOPE ONE WAY WITH ONLY ONE CONCRETE HEADWALL. GEOTEXTILE FABRIC (CLASS B OR D) SHALL BE WRAPPED AROUND THE PERFORATED PIPE ONLY IN THE AREA OUTSIDE OF THE BEDDING MATERIAL.~~

5. LOW PERMEABLE MATERIAL SHALL BE DEFINED AS A SOIL HAVING THE SAME PI LIMITS AS PLASTIC SOIL BLANKETS, SEE SECTION 203.10.

NO.	DATE	REVISION DESCRIPTION	BY
4	3-25-08	CHANGED TITLE & STUBOUT & IMPERVIOUS MAT.	P.B.F.
3	2-1-07	ADDED NOTE FOR JOINT CONNECTION	P.B.F.
2	12-28-04	NOTE 3, IMPERVIOUS MATERIAL	P.B.F.
1	5-24-01	UPDATED FOR 2000 SPECS, ADD C J JOINT	P.B.F.

DESIGNED A. ALLEN
CHECKED
DETAILED G. GRASS
CHECKED P. FOSSIER
DATE MAY, 2000
SHEET

PARISH | FEDERAL PROJECT | STATE PROJECT

SHEET NUMBER 287

UNDERDRAINS FOR CONCRETE APPROACH SLAB
(DRAINAGE THROUGH BACKWALL)

SPECIAL DETAIL | ASD-SA

BRIDGE AND STRUCTURAL DESIGN

IP_PWP:DMS09482\ASD-SA.DGN

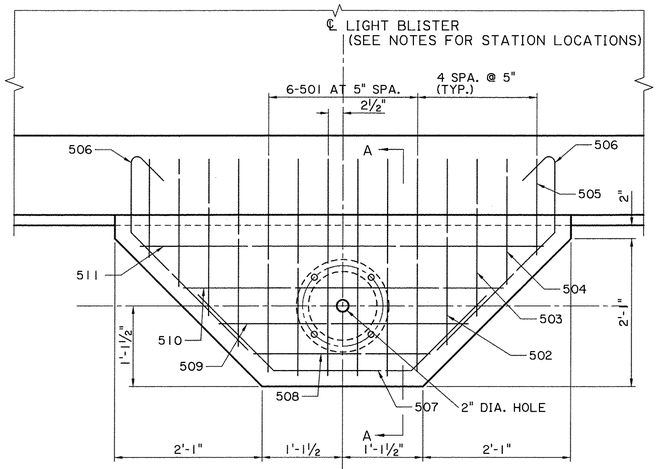

PLAN VIEW
(SHOWING TOP REINFORCING)
SCALE: 1"=1'-0"

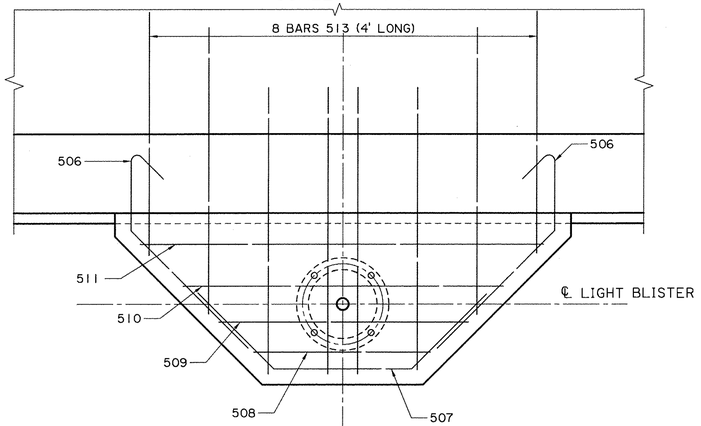

PLAN VIEW
(SHOWING BOTTOM REINFORCING)

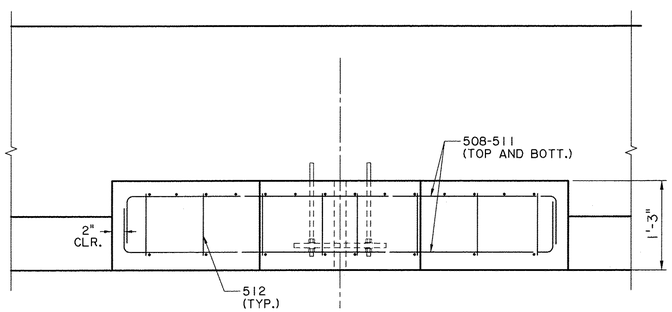

ELEVATION
SCALE: 1"=1'-0"

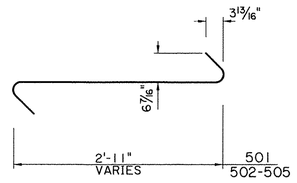

501-505
2½" ø PIN

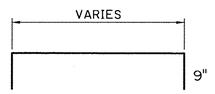

508-511
2½" ø PIN

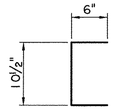

512
2½" ø PIN

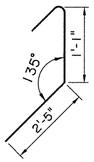

506
2½" ø PIN

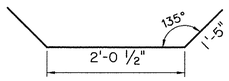

507
2½" ø PIN

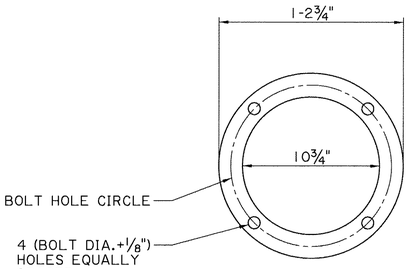

ANCHOR PLATE DETAIL

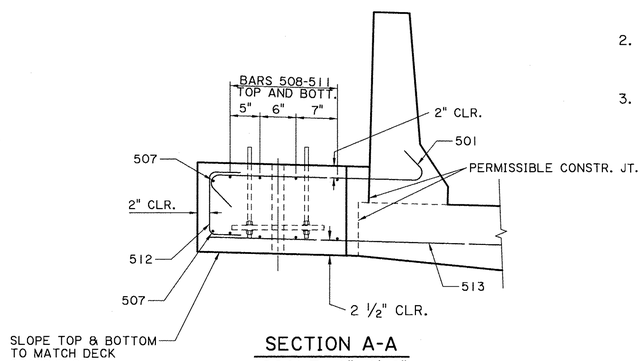

SECTION A-A
SCALE: 1"=1'-0"

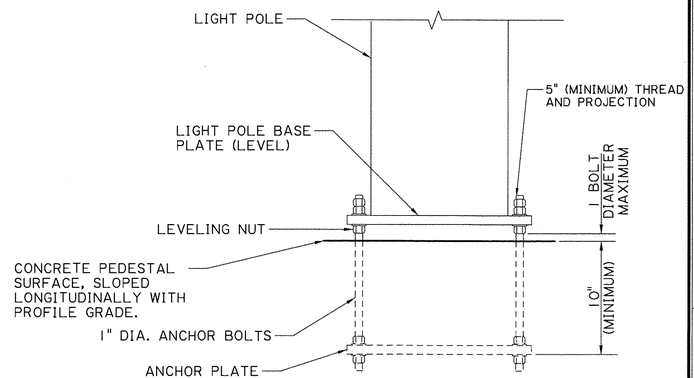

DETAIL "2"
2" = 1'-0"

NOTES:

1. LIGHT SUPPORT BLISTERS SHALL BE LOCATED ON MEDIAN SIDE OF BRIDGE AS FOLLOWS:
   STA. 118+15 AND 119+65 NORTHBOUND
   STA. 218+10 AND 219+60 SOUTHBOUND
2. LIGHT SUPPORT BLISTER SHALL BE PAID FOR UNDER ITEM 9900005 PER EACH AND SHALL INCLUDE CONCRETE, REINFORCING, ANCHOR BOLTS, NUTS, WASHERS, AND ANCHOR PLATE.
3. BOLTS, EXPOSED NUTS, AND WASHERS SHALL BE GALVANIZED.

STATE OF LOUISIANA
GERALD G. MENARD
License No. 20437
PROFESSIONAL ENGINEER
IN
CIVIL ENGINEERING
9/13/2020

SHEET NUMBER 288

PARISH	CITY	PROJECT
EAST BATON ROUGE	BATON ROUGE	12-CS-HC-0043

DESIGNED	CHECKED	DETAILED	CHECKED	DATE	SHEET
EG	GGM	JNH	GGM		

NO.	DATE	REVISION OR CHANGE ORDER DESCRIPTION	BY

LIGHT SUPPORT BLISTER DETAILS
MALL OF LA BOULEVARD BRIDGE
MALL OF LOUISIANA BOULEVARD

EVANS-GRAVES ENGINEERS

F:\00_PROJECTS\12-500\Sheet_Sets\Construction - Revised\P2 Sheet 288 blister.dgn 9/14/2020 08:42

CITY OF BATON ROUGE

AND

PARISH OF EAST BATON ROUGE

DEPARTMENT OF TRANSPORTATION & DRAINAGE
ENGINEERING DIVISION

RIGHT OF WAY PROPERTY MAP OF PROPOSED

PAULAT BOULEVARD
(FORMERLY PICARDY-PERKINS CONNECTOR)
PHASE I

C.P. PROJECT NO. 12-CS-HC-0043

LADOTD S.P. NO. H.011683

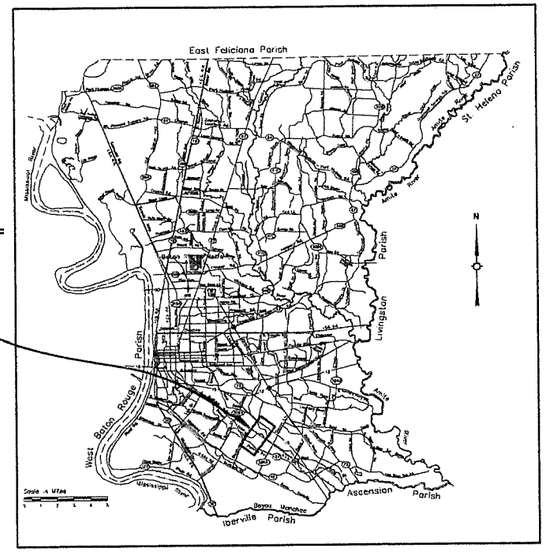

VICINITY MAP

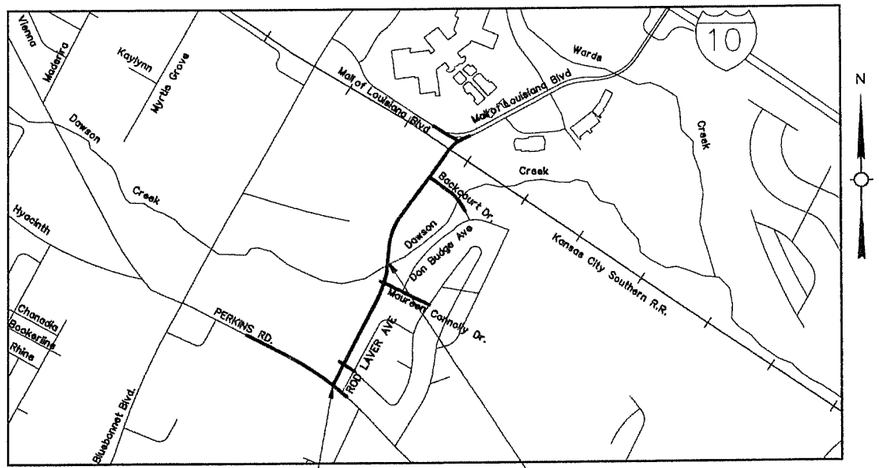

BEGIN PROJECT
STA. 100+15.12

END PHASE 1
STA. 120+71.14

LAYOUT MAP

0 1000 2000 3000

SCALE IN FEET

STATE OF LOUISIANA
MAX O. USREY III
REG. No. 4787
REGISTERED
PROFESSIONAL
LAND SURVEYOR

3/30/2016

STATE OF LOUISIANA
ROBERT H. BROOKS III
REG. No. 4712
REGISTERED
PROFESSIONAL
LAND SURVEYOR

3/30/2016

EVANS-GRAVES ENGINEERS

SHEET NUMBER	301
PARISH	EAST BATON ROUGE
CITY	BATON ROUGE
PROJECT	12-CS-HC-0043
COMPUTED / CHECKED	RHB / MLR
DETAILED / CHECKED	MLR / MOU
DATE	3/30/2016
SCALE	1"=1000'

RIGHT OF WAY MAP
C.P. PROJECT NO. 12CS-HC-0043
LADOTD S.P. NO. H.011683
PAULAT BOULEVARD PHASE I
EAST BATON ROUGE PARISH
PAULAT BOULEVARD

REVISION DESCRIPTION | BY | DATE

FILE NO. | R/W SHEET NO.TITLE

RECORDATION SET
F:\00_PROJECTS\12-500\Sheet_Sets\RIGHT OF WAY\RECORDATION Set Phase 1\12500rw00.dgn
3/29/2016 15:49

RECORDATION SET
F:\00_PROJECTS\12-500\Sheet_Sets\RIGHT OF WAY\RECORDATION Set Phase 1\12500rw01.dgn
3/29/2016 15:39

BEGIN PROJECT
PAULAT BOULEVARD
STA. 100+15.12

GREENSBURG LAND DISTRICT
T8S - R1E
SECTION 57

PERKINS ROWE ASSOCIATES, LLC

CITIZENS BANK & TRUST COMPANY
TRACT B-1-B
1 STORY BRICK BLDG.

CRAWFISH LLC
BLOCK E

JOHN JOSEPH O'NEILL, III et ux
R.A.-0.699 Ac.
(PER DEED)
1 STORY METAL & BRICK BLDG.
LOT C

NORMAN KANE, L.L.C.
R.A.-0.123 Ac.
(PER DEED)
LOT 149

WIMBLEDON ESTATES
(2nd FILING)
LOT 150
LOT 151

La 427 - PERKINS ROAD - R/W VARIES

EXISTING R/W
REQUIRED R/W
LIMITS OF CONSTRUCTION
EXISTING 15' PRIVATE SERVITUDE
EXISTING PRIVATE SERVITUDE OF PASSAGE
EXISTING 5' PUBLIC SERVITUDE
EXISTING 7.5' PUBLIC SERVITUDE
REQUIRED CONSTRUCTION SERVITUDE
SINGLE POLE BILLBOARD SIGN
BANK MONUMENT SIGN
T-POST R/W MARKER
IRON ROD
1/2" I.P.
℄ PAULAT BOULEVARD
ROD LAVER AVE. - 50' R/W
BLOCK NB
MULTILEVEL PARKING GARAGE

Y=682615.1103
X=3356640.7966

Y=682567.1305
X=3356780.1852

Y=682992.6119
X=3357012.7237

INSET "A"
N.T.S.

SEE INSET "A"

R = 2596.48
ARC = 19.73'
CH = 19.73'
CHB = N57°43'59"W

R = 3201.41'
ARC = 59.39'
CH = 59.39'
CHB = N60°35'46"W

R = 3201.41'
ARC = 2.64'
CH = 2.64'
CHB = N60°02'28"W

R = 498.59'
ARC = 10.04
CH = 10.04'
CHB = S39°32'59"W

AREA OF SERVITUDE OVERLAPS

PARCEL	TOTAL AREA	UNENCUMBRANCED	PREVIOUSLY ENCUMBRANCED
I-6-M-I	1499.8 SQ. FT.	1465.3 SQ. FT.	34.5 SQ. FT.
I-6	28331.0 SQ. FT.	23803.4 SQ. FT.	4527.6 SQ. FT.
I-5	9846.2 SQ. FT.	8325.4 SQ. FT.	1520.8 SQ. FT.
I-4	53.0 SQ. FT.	0.0 SQ. FT.	53.0 SQ. FT.
I-3-C-I	243.6 SQ. FT.	154.7 SQ. FT.	88.9 SQ. FT.
I-3	1539.0 SQ. FT.	71.0 SQ. FT.	1468.0 SQ. FT.
I-2	13296.8 SQ. FT.	13265.6 SQ. FT.	31.2 SQ. FT.
I-1	10333.9 SQ. FT.	0.0 SQ. FT.	10333.9 SQ. FT.

PARCEL	OWNER	ACQUISITION	AREA
I-6-M-I	CRAWFISH LLC	ORIG. 842 BNDL. 12550 DEC. 17, 2013	1499.8 SQ. FT.
I-6			28331.0 SQ. FT.
I-5	NORMAN KANE, L.L.C.	ORIG. 750 BNDL. 10564 DEC. 30, 1994	9846.2 SQ. FT.
I-4	JOHN JOSEPH O'NEILL, III et ux	ORIG. 603 BNDL. 9656 APRIL 13, 1984	53.0 SQ. FT.
I-3-C-I			243.6 SQ. FT.
I-3			1539.0 SQ. FT.
I-2	CITIZENS BANK & TRUST COMPANY	ORIG. 346 BNDL. 11777 OCT. 20, 2005	13296.8 SQ. FT.
I-1	PERKINS ROWE ASSOCIATES, LLC	ORIG. 84 BNDL. 11126 MAY 30, 2000	10333.9 SQ. FT.

LEGEND

EXISTING R/W	RIGHT OF WAY LINE
EXISTING C. of A.	CONTROL OF ACCESS
EXIST R/W & EXIST. C. of A.	RIGHT OF WAY & CONTROL OF ACCESS
REQUIRED R/W	RIGHT OF WAY LINE
REQUIRED C. of A.	CONTROL OF ACCESS
REQ'D R/W & REQ'D C. of A.	RIGHT OF WAY & CONTROL OF ACCESS
	LIMITS OF CONSTRUCTION
	LOT LINE
	APPARENT PROPERTY LINE
	EXISTING SERVITUDE LINE
	SECTION LINE

NOTES:
1. ALL PIPES AND MONUMENTS SHOWN HEREON WERE FOUND.
2. THE COORDINATES AND BEARINGS SHOWN HEREON ARE BASED ON LOUISIANA STATE PLANE COORDINATE SYSTEM, SOUTH ZONE (NAD 83 (2011) EPOCH 2010.0000) TO CONVERT FROM GRID BEARINGS TO TRUE BEARINGS USE: 0°07'14.1"

BASE STATIONS:

HAMM, AJ7833,	SJBI, DF8160	ILSU, DF5754
HAMMOND CORS ARP	SJB GROUP COOP CORS ARP	LOUISIANA STAE U CORS ARP
LAT=N30°30'47.052"	LAT=N30°23'45.831"	LAT=N30°24'26.706"
LONG=W090°28'03.428"	LONG=W089°06'25.855"	LONG=W091°10'48.915"
Y=223454.10	Y=210190.95	Y=211438.09
X=1083092.882	X=1021732.23	X=1014708.61

3. DISTANCES SHOWN ARE HORIZONTAL GROUND DISTANCES. TO CONVERT DISTANCES DERIVED FROM COORDINATES SHOWN HEREON TO HORIZONTAL GROUND DISTANCES, USE SCALE FACTOR: 0.99994724

STATE OF LOUISIANA
MAX O. USREY III
REG. No. 4737
REGISTERED PROFESSIONAL LAND SURVEYOR
3/30/2016

STATE OF LOUISIANA
ROBERT H. BROOKS III
REG. No. 4712
REGISTERED PROFESSIONAL LAND SURVEYOR
3/30/2016

SHEET NUMBER 302

PARISH	CITY	PROJECT
EAST BATON ROUGE	BATON ROUGE	12-CS-HC-0043

COMPUTED R. BROOKS
CHECKED M. USREY
DETAILED M. ROBERTS
CHECKED M. USREY
DATE 3/30/2016
SCALE 1" = 20'

RIGHT OF WAY MAP
C.P. PROJECT NO. 12CS-HC-0043
LADOTD S.P. NO. H.011683
PAULAT BOULEVARD PHASE I
EAST BATON ROUGE PARISH
PAULAT BOULEVARD

EVANS-GRAVES ENGINEERS

DATE	REVISION DESCRIPTION	BY
2/5/2016	PARCEL I-6-M-I REVISED AREA AND AREA OF SERVITUDE OVERLAPS, REVISED PARCEL I-3	MOU

FILE NO.
R/W SHEET NO. 1

GREENSBURG LAND DISTRICT
T8S - R1E
SECTION 57

NOTES:
1. ALL PIPES AND MONUMENTS SHOWN HEREON WERE FOUND.
2. THE COORDINATES AND BEARINGS SHOWN HEREON ARE BASED ON LOUISIANA STATE PLANE COORDINATE SYSTEM, SOUTH ZONE (NAD 83 (2011) EPOCH 2010.0000) TO CONVERT FROM GRID BEARINGS TO TRUE BEARINGS USE: 0°07'15.5"

BASE STATIONS:

HAMM, AJ7833,	SJBI, DF8160	IL SU, DF5754
HAMMOND CORS ARP	SJB GROUP COOP CORS ARP	LOUISIANA STAE U CORS ARP
LAT=N30°30'47.052"	LAT=N30°23'45.831"	LAT=N30°24'26.706"
LONG=W090°28'03.428"	LONG=W091°06'25.855"	LONG=W091°10'48.915"
Y=223454.10	Y=210190.95	Y=211438.09
X=1083092.882	X=1021732.23	X=1014708.61

3. DISTANCES SHOWN ARE HORIZONTAL GROUND DISTANCES. TO CONVERT DISTANCES DERIVED FROM COORDINATES SHOWN HEREON TO HORIZONTAL GROUND DISTANCES, USE SCALE FACTOR: 0.99995069

PARKING GARAGE CORNER
+64.97
46.92'
6.15'
I-6-W-I
4.15'
N24°22'22"W
106+68.57
43.50'
I-6

105+00

℄ CURVE DATA
P.I. STA. 106+78.78
Y = 683149.4937
X = 3357098.4644
Δ = 3°15'35.9" LT
D = 1°16'23.7"
T = 128.05'
L = 256.04'
R = 4500.00'

110+00

PRIVATE ALL-PURPOSE ACCESS AND UTILITY SERVITUDE

P.C. STA. 105+50.73
Y=683037.1275
X=3357037.0328

CRAWFISH, LLC

BLOCK E

MULTILEVEL PARKING GARAGE

105.8'

STA. 106+83.57

106+90.00
70.00'
N26°08'29"E 56.56'
+47.45
70.37'
N66°03'39"E 16.14'
+60.00
60.00'
N24°22'22"W 6.98'

P.T. STA. 106+06.77
Y=683265.1702
X=3357153.3866

PARK ROWE VILLAGE. L.L.C.

TRACT B-2-A

TRACT B-1-A-1-A

407.48' N24°07'52"E

REQUIRED R/W

LIMITS OF CONSTRUCTION

235.0'
I-6-W-I
+64.97
46.92'
SEE INSET "A"
22.78
56.63'
N24°22'22"W
106+68.57
43.50'
64.58'
96.54'
N28°44'20"E 312.22'
REQUIRED R/W
S28°39'29"W 187.47'
R=4456.50' ARC=116.70' CH=116.70' CB=S27°54'28"W
LIMITS OF CONSTRUCTION
I-6
2-1

Y=682992.6119
X=3357012.7237
N28°39'28.6"E
N61°10'W
31.95'
P.I.
℄ PAULAT BOULEVARD
N25°23'52.8"E
Y=683439.7231
X=3357236.2746

LIMITS OF CONSTRUCTION
367.00' S28°25'28"W
REQUIRED R/W
858.63' S28°25'28"W
LIMITS OF CONSTRUCTION
REQUIRED R/W
15' PUBLIC SERVITUDE

1/2" I.P
+47.99
44.67'

℄ CURVE DATA
P.I. STA. 111+18.34
Y = 683546.6314
X = 3357287.0221
Δ = 3°15'35.9" RT
D = 1°16'23.7"
T = 128.05'
L = 256.04'
R = 4500.00'

P.C. STA. 109+90.29
Y=683430.9548
X=3357232.0998

LOT 151 | LOT 152 | LOT 153 | LOT 154 | LOT 155 | LOT 156

WIMBLEDON ESTATES
(2nd FILING)

STATE OF LOUISIANA
MAX O. USREY III
REG. No. 4737
REGISTERED PROFESSIONAL LAND SURVEYOR
3/30/2016

STATE OF LOUISIANA
ROBERT H. BROOKS III
REG. No. 4712
REGISTERED PROFESSIONAL LAND SURVEYOR
3/30/2016

LEGEND

EXISTING R/W / REQUIRED R/W	RIGHT OF WAY LINE
EXISTING C. of A. / REQUIRED C. of A.	CONTROL OF ACCESS
EXIST R/W & EXIST C. of A. / REQ'D R/W & REQ'D C. of A.	RIGHT OF WAY & CONTROL OF ACCESS
	LIMITS OF CONSTRUCTION
	LOT LINE
	APPARENT PROPERTY LINE
	EXISTING SERVITUDE LINE
	SECTION LINE

AREA OF SERVITUDE OVERLAPS

PARCEL	TOTAL AREA	UNENCUMBRANCED	PREVIOUSLY ENCUMBRANCED
2-1	3.877 AC.	3.023 AC.	0.854 AC.

PARCEL	OWNER	ACQUISITION	AREA
2-1	PARK ROWE VILLAGE. L.L.C.	ORIG. 956 BNDL. 12541 NOV. 7, 2013	3.877 AC.

EVANS-GRAVES ENGINEERS

SHEET NUMBER	303
PARISH	EAST BATON ROUGE
CITY	BATON ROUGE
PROJECT	12-CS-HC-0043
COMPUTED	R. BROOKS
CHECKED	M. USREY
DETAILED	M. ROBERTS
CHECKED	M. USREY
DATE	3/30/2016
SCALE	1" = 20'

RIGHT OF WAY MAP
C.P. PROJECT NO. 12CS-HC-0043
LADOTD S.P. NO. H.011683
PAULAT BOULEVARD PHASE I
EAST BATON ROUGE PARISH
PAULAT BOULEVARD

REVISION DESCRIPTION | BY | DATE

FILE NO. | R/W SHEET NO. 2

RECORDATION SET
P:\00_PROJECTS\12-500\Sheet_Sets\RIGHT OF WAY\RECORDATION Set Phase 1\12500rw02.dgn
3/29/2016 15:39

RECORDATION SET
F:\00_PROJECTS\12-500\Sheet_Sets\RIGHT OF WAY\RECORDATION Set Phase 1\12500rw03.dgn
3/29/2016 15:39

GREENSBURG LAND DISTRICT
T8S - R1E
SECTION 57

NOTES:
1. ALL PIPES AND MONUMENTS SHOWN HEREON WERE FOUND.
2. THE COORDINATES AND BEARINGS SHOWN HEREON ARE BASED ON LOUISIANA STATE PLANE COORDINATE SYSTEM, SOUTH ZONE (NAD 83 (2011) EPOCH 2010.0000) TO CONVERT FROM GRID BEARINGS TO TRUE BEARINGS USE: 0°07'16.7"

BASE STATIONS:

HAMM, AJ7833,	SJBI_DF8160	ILSU_DF5754
HAMMOND CORS ARP	SJB GROUP COOP CORS ARP	LOUISIANA STAE U CORS ARP
LAT=N30°30'47.052"	LAT=N30°23'45.83"	LAT=N30°24'26.706"
LONG=W090°28'03.428"	LONG=W089°06'25.855"	LONG=W091°10'48.915"
Y=223454.10	Y=210190.95	Y=211438.09
X=1083092.882	X=1021732.23	X=1014708.61

3. DISTANCES SHOWN ARE HORIZONTAL GROUND DISTANCES. TO CONVERT DISTANCES DERIVED FROM COORDINATES SHOWN HEREON TO HORIZONTAL GROUND DISTANCES, USE SCALE FACTOR: 0.99994752

STATE OF LOUISIANA
ROBERT H. BROOKS III
REG. No. 4712
REGISTERED PROFESSIONAL LAND SURVEYOR
3/30/2016

STATE OF LOUISIANA
MAX O. USREY III
REG. No. 4737
REGISTERED PROFESSIONAL LAND SURVEYOR
3/30/2016

110+00

PARK ROWE VILLAGE, L.L.C.
TRACT B-2-A

115+00

℄ CURVE DATA
P.I. STA. 114+94.89
Y = 683877.1129
X = 3357467.6403
Δ = 23°37'17.2" LT
D = 7°15'09.5"
T = 165.19'
L = 325.69'
R = 790.00'

TRACT B-1-A-1-A
N24°07'52"E 407.48'
REQUIRED R/W
LIMITS OF CONSTRUCTION
+65.22
72.70'
N28°25'28"E 205.44'
P.C. STA. 113+29.70
Y=683732.1555
X=3357388.467
+73.34
71.70'
N16°45'50"E 114.67'
+00.00
80.00'
REQUIRED R/W
LIMITS OF CONSTRUCTION

Y=683439.7231
X=3357236.2746
℄ PAULAT BOULEVARD N28°39'28.6"E
Y=683889.2114
X=3357453.4142
P.I.

LIMITS OF CONSTRUCTION
REQUIRED R/W
858.63' S28°25'28"W
53.07'
56.81'
LIMITS OF CONSTRUCTION
REQUIRED R/W

15' PUBLIC SERVITUDE
LOT 156
LOT 157
15' PUBLIC SERVITUDE
LOT 165
1/2" I.P.
+64.07
53.21
1/2" I.P.
+10.71
56.65'
15' PUBLIC SERVITUDE
LOT 166
5' PUBLIC S.W. SERVITUDE

℄ CURVE DATA
P.I. STA. 111+18.34
Y = 683546.6314
X = 3357287.0221
Δ = 3°15'35.9" RT
D = 1°16'23.7"
T = 128.05'
L = 256.04'
R = 4500.00'

STA. 111+24.17
15' PUBLIC SERVITUDE
7.5' OFF EACH LOT
P.T. STA. 112+46.33
Y=683658.5975
X=3357348.4336
STA. 113+66.61
EXISTING R/W
MAUREEN CONNOLLY DR.
(50' R/W)
EXISTING R/W
STA. 114+16.81
5' PUBLIC S.W. SERVITUDE

WIMBLEDON ESTATES
(2nd FILING)

LEGEND

REQUIRED R/W	RIGHT OF WAY LINE
REQUIRED C. of A.	CONTROL OF ACCESS
REQ'D R/W & REQ'D C. of A.	RIGHT OF WAY & CONTROL OF ACCESS
	LIMITS OF CONSTRUCTION
	LOT LINE
	APPARENT PROPERTY LINE
	EXISTING SERVITUDE LINE
	SECTION LINE

EXISTING R/W
EXISTING C. of A.
EXIST R/W & EXIST. C. of A.

PARCEL	OWNER	ACQUISITION	AREA

FILE NO.
R/W SHEET NO. 3

SHEET NUMBER 364

PARISH	EAST BATON ROUGE
CITY	BATON ROUGE
PROJECT	12-CS-HC-0043
COMPUTED	R. BROOKS
CHECKED	M. USREY
DETAILED	M. ROBERTS
CHECKED	M. USREY
DATE	3/30/2016
SCALE	1" = 20'

RIGHT OF WAY MAP
C.P. PROJECT NO. 12CS-HC-0043
LADOTD S.P. NO. H011683
PAULAT BOULEVARD PHASE I
EAST BATON ROUGE PARISH
PAULAT BOULEVARD

EVANS-GRAVES ENGINEERS

BY	REVISION DESCRIPTION	DATE

RECORDATION SET
F:\00_PROJECTS\12-500\Sheet Sets\RIGHT OF WAY\RECORDATION Set Phase 1\12500rw04.dgn 3/29/2016 15:39

GREENSBURG LAND DISTRICT
T8S - R1E
SECTION 57

NOTES:
1. ALL PIPES AND MONUMENTS SHOWN HEREON WERE FOUND.
2. THE COORDINATES AND BEARINGS SHOWN HEREON ARE BASED ON LOUISIANA STATE PLANE COORDINATE SYSTEM, SOUTH ZONE (NAD 83 (2011) EPOCH 2010.0000) TO CONVERT FROM GRID BEARINGS TO TRUE BEARINGS USE: 0°07'17.6"

BASE STATIONS:

HAMM A J 1833, HAMMOND CORS ARP	SJBI DF8160 SJB GROUP COOP CORS ARP	ILSU DF5754 LOUISIANA STAE U CORS ARP
LAT=N30°30'47.052"	LAT=N30°23'45.83"	LAT=N30°24'26.706"
LONG=W090°28'03.428"	LONG=W091°06'25.855"	LONG=W091°10'48.915"
Y=223454.10	Y=210190.95	Y=211438.09
X=1083092.882	X=1021732.23	X=1014708.61

3. DISTANCES SHOWN ARE HORIZONTAL GROUND DISTANCES. TO CONVERT DISTANCES DERIVED FROM COORDINATES SHOWN HEREON TO HORIZONTAL GROUND DISTANCES, USE SCALE FACTOR: 0.99994768

STATE OF LOUISIANA
ROBERT H. BROOKS III
REG. No. 4712
REGISTERED PROFESSIONAL LAND SURVEYOR
3/30/2016

PARK ROWE VILLAGE, L.L.C.
TRACT B-2-A

115+00

℄ CURVE DATA
P.I. STA. 114+94.89
Y = 683877.1129
X = 3357467.6403
Δ = 23°37'17.2" LT
D = 7°15'09.5"
T = 165.19'
L = 325.69'
R = 790.00'

250' PUBLIC DRAINAGE SERVITUDE 145' OFF EACH LOT
EXISTING DRAINAGE SERVITUDE

P.T. STA. 116+55.39
Y=684041.6690
X=3357482.1427

+00.00 85.00'
N09°29'20"E 89.64'
REQUIRED R/W
LIMITS OF CONSTRUCTION

114.77' N01°36'07"W
53.15' N46°13'12"E
+60.00 65.00'
101.76' N05°02'11"E
REQUIRED R/W
LIMITS OF CONSTRUCTION

STA. 119+19.19
DAWSON CREEK
℄ DAWSON CREEK

120+00

91.11' N56°05'46"E 96.61'
5.50'
+23.02 3.96'
163.52' N40°35'28"E

Y=684382.9395
X=3357527.2583

N5°02'11.4"E

Y=683889.2114
X=3357453.4142
℄ PAULAT BOULEVARD
P.I.

2-1

P.C. STA. 117+84.32
Y=684170.1035
X=3357493.4617

REQUIRED R/W
119+00.00 80.00'
R = 1470.00'
ARC = 163.05'
CH = 162.96'
CHB = S12°29'24"W
TRACT B-2-A
STA. 116+74.88
S01°16'15"E 144.80'

S28°25'28"W 858.63'
LIMITS OF CONSTRUCTION
REQUIRED R/W
82.39' S16°35'51"W
156.85' S11°18'50"W
+25.56 78.04'
+00.00 85.00'
+50.00 100.00'
41.6'

STATE OF LOUISIANA
MAX O. USREY III
REG. No. 4737
REGISTERED PROFESSIONAL LAND SURVEYOR
3/30/2016

LOT 167
LOT 168
15' PUBLIC SERVITUDE
CONCRETE
LOT 169
WIMBLEDON ESTATES (2nd FILING)
LOT 170
LOT 171
1/2" I.P. +64.40 175.05'
1/2" I.P. +67.79 213.09'

PARK ROWE VILLAGE, L.L.C.
TRACT B-1-A-1-A

℄ CURVE DATA
P.I. STA. 122+50.76
Y = 684634.7372
X = 3357534.4102
Δ = 33°29'44.8" RT
D = 3°41'47.4"
T = 466.43'
L = 906.15'
R = 1550.00'

230' PUBLIC DRAINAGE SERVITUDE 145' OFF EACH LOT
EXISTING DRAINAGE SERVITUDE

LEGEND

EXISTING R/W	REQUIRED R/W — RIGHT OF WAY LINE
EXISTING C. of A.	REQUIRED C. of A. — CONTROL OF ACCESS
EXIST R/W & EXIST C. of A.	REQ'D R/W & REQ'D C. of A. — RIGHT OF WAY & CONTROL OF ACCESS
	LIMITS OF CONSTRUCTION
	LOT LINE
	APPARENT PROPERTY LINE
	EXISTING SERVITUDE LINE
	SECTION LINE

PARCEL	OWNER	ACQUISITION	AREA

FILE NO. | R/W SHEET NO. 4

SHEET NUMBER 305

PARISH: EAST BATON ROUGE
CITY: BATON ROUGE
PROJECT: 12-CS-HC-0043

COMPUTED: R. BROOKS
CHECKED: M. USREY
DETAILED: M. ROBERTS
CHECKED: M. USREY
DATE: 3/30/2016
SCALE: 1" = 20'

RIGHT OF WAY MAP
C.P. PROJECT NO. 12CS-HC-0043
LADOTD S.P. NO. H.011683
PAULAT BOULEVARD PHASE I
EAST BATON ROUGE PARISH
PAULAT BOULEVARD

EVANS-GRAVES ENGINEERS

REVISION DESCRIPTION | BY | DATE

RECORDATION SET
F:\00_PROJECTS\12-500\Sheet_Sets\RIGHT OF WAY\RECORDATION Set Phase 1\12500rw05.dgn 3/29/2016 15:39

GREENSBURG LAND DISTRICT
T8S - R1E
SECTION 57

NOTES:
1. ALL PIPES AND MONUMENTS SHOWN HEREON WERE FOUND.
2. THE COORDINATES AND BEARINGS SHOWN HEREON ARE BASED ON LOUISIANA STATE PLANE COORDINATE SYSTEM, SOUTH ZONE (NAD 83 (2011) EPOCH 2010.0000) TO CONVERT FROM GRID BEARINGS TO TRUE BEARINGS USE: 0°07'18.3"

BASE STATIONS:

HAMM, AJ7833,	SJBI, DF8160	ILSU, DF5754
HAMMOND CORS ARP	SJB GROUP COOP CORS ARP	LOUISIANA STAE U CORS ARP
LAT=N30°30'47.052"	LAT=N30°23'45.831"	LAT=N30°24'26.706"
LONG=W090°28'03.428"	LONG=W091°06'25.855"	LONG=W091°10'48.915"
Y=223454.10	Y=210190.95	Y=211438.09
X=1083092.882	X=1021732.23	X=1014708.61

3. DISTANCES SHOWN ARE HORIZONTAL GROUND DISTANCES. TO CONVERT DISTANCES DERIVED FROM COORDINATES SHOWN HEREON TO HORIZONTAL GROUND DISTANCES, USE SCALE FACTOR: 0.99994783

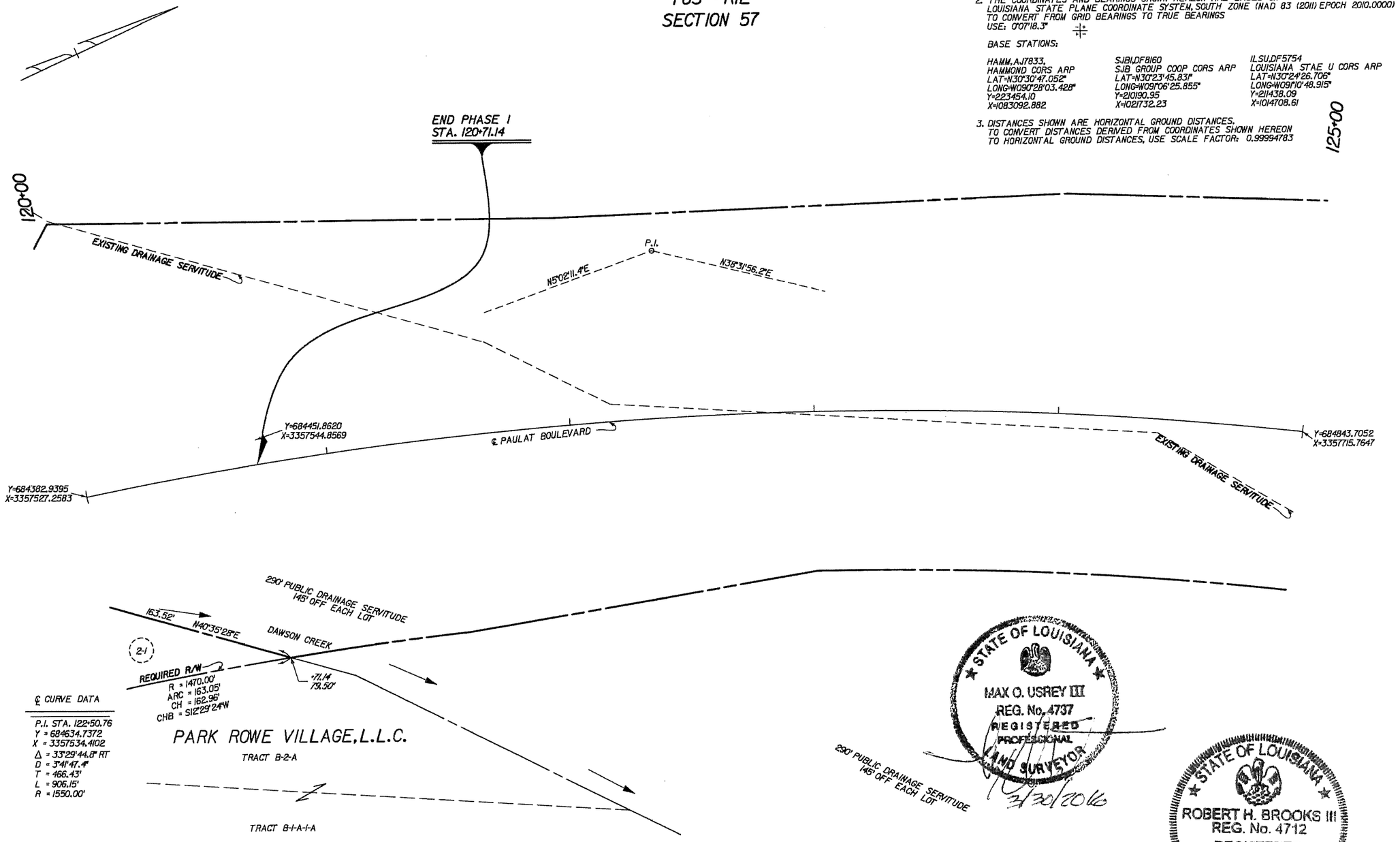

℄ CURVE DATA

P.I. STA. 122+50.76
Y = 684634.7372
X = 3357534.4102
Δ = 33°29'44.8" RT
D = 3°41'47.4"
T = 466.43'
L = 906.15'
R = 1550.00'

PARCEL	OWNER	ACQUISITION	AREA

LEGEND

EXISTING R/W / REQUIRED R/W	RIGHT OF WAY LINE
EXISTING C. of A. / REQUIRED C. of A.	CONTROL OF ACCESS
EXIST R/W & EXIST C. of A. / REQ'D R/W & REQ'D C. of A.	RIGHT OF WAY & CONTROL OF ACCESS
	LIMITS OF CONSTRUCTION
	LOT LINE
	APPARENT PROPERTY LINE
	EXISTING SERVITUDE LINE
	SECTION LINE

MAX O. USREY III
REG. No. 4737
REGISTERED PROFESSIONAL LAND SURVEYOR
3/30/2016

ROBERT H. BROOKS III
REG. No. 4712
REGISTERED PROFESSIONAL LAND SURVEYOR
3/30/2016

FILE NO.
R/W SHEET NO. 5

SHEET NUMBER 306

PARISH	EAST BATON ROUGE
CITY	BATON ROUGE
PROJECT	12-CS-HC-0043
COMPUTED / CHECKED	R. BROOKS / M. USREY
DETAILED / CHECKED	M. ROBERTS / M. USREY
DATE	3/30/2016
SCALE	1" = 20'

RIGHT OF WAY MAP
C.P. PROJECT NO. 12CS-HC-0043
LADOTD S.P. NO. H.011683
PAULAT BOULEVARD PHASE I
EAST BATON ROUGE PARISH
PAULAT BOULEVARD

EVANS-GRAVES ENGINEERS

BY	REVISION DESCRIPTION	DATE

RECORDATION SET
F:\00_PROJECTS\12-500\Sheet_Sets\RIGHT OF WAY\RECORDATION Set Phase 1\12500rw06.dgn
3/29/2016 15:39

GREENSBURG LAND DISTRICT
T8S - R1E
SECTIONS 57 & 58

SECTION 58
SECTION 57

BEGIN PROJECT
STA. 100+15.62

100+00

La 427 - PERKINS ROAD

CITIZENS BANK & TRUST COMPANY
R.A.=0.705 Ac.
(PER DEED)

TRACT B-1-B

BLOCK 11B

PERKINS ROWE ASSOCIATES, LLC
R.A.=0.067 Ac.
(PER DEED)

105+00

CRAWFISH LLC
R.A.=3.488 Ac.
(PER DEED)

BLOCK E

110+00

TRACT B-2-A

PARK ROWE VILLAGE, L.L.C.
R.A.=14.266 Ac.
(PER DEED)

EXISTING DRAINAGE SERVITUDE

DAWSON CREEK - 230' DRAINAGE SERVITUDE

EXISTING DRAINAGE SERVITUDE

115+00

120+00

END PHASE I
STA. 120+71.14

SECTION 58
SECTION 57

125+00

TRACT B-1-A-1-A

TRACT B-2-A

TRACT B-1-A-1-A

℄ PAULAT BOULEVARD

LOT C

149

150 151 152 153 154 155 156 157 158

WIMBLEDON ESTATES
(2nd FILING)

ROD LAVER AVE.

165

164

MAUREEN CONNOLLY DR.

166 167 168 169 170 171 172 173 174

BUDGE AVE.

PARK ROWE VILLAGE, L.L.C.
R.A.=4.936 Ac.
(PER DEED)

LEGEND

EXISTING R/W	REQUIRED R/W — RIGHT OF WAY LINE
EXISTING C. of A.	REQUIRED C. of A. — CONTROL OF ACCESS
EXIST R/W & EXIST C. of A.	REQ'D R/W & REQ'D C. of A. — RIGHT OF WAY & CONTROL OF ACCESS
	LIMITS OF CONSTRUCTION
	LOT LINE
	APPARENT PROPERTY LINE
	EXISTING SERVITUDE LINE
	SECTION LINE

STATE OF LOUISIANA
MAX O. USREY III
REG. No. 4737
REGISTERED
PROFESSIONAL
LAND SURVEYOR
3/30/2016

STATE OF LOUISIANA
ROBERT H. BROOKS III
REG. No. 4712
REGISTERED
PROFESSIONAL
LAND SURVEYOR
3/30/2016

SHEET NUMBER 307

PARISH: EAST BATON ROUGE
CITY: BATON ROUGE
PROJECT: 12-CS-HC-0043

COMPUTED: R. BROOKS
CHECKED: M. USREY
DETAILED: M. ROBERTS
CHECKED: M. USREY
DATE: 3/30/2016
SCALE: 1" = 100'

RIGHT OF WAY MAP
C.P. PROJECT NO. 12CS-HC-0043
LADOTD S.P. NO. H.011683
PAULAT BOULEVARD PHASE I
EAST BATON ROUGE PARISH
PAULAT BOULEVARD

EVANS-GRAVES ENGINEERS

BY | REVISION DESCRIPTION | DATE

FILE NO. | R/W SHEET NO. 6

CITY OF BATON ROUGE

AND

PARISH OF EAST BATON ROUGE

DEPARTMENT OF TRANSPORTATION & DRAINAGE
ENGINEERING DIVISION

RIGHT OF WAY PROPERTY MAP OF PROPOSED

MALL OF LOUISIANA BOULEVARD
(FORMERLY PAULAT BOULEVARD)
(FORMERLY PICARDY-PERKINS CONNECTOR)
PHASE II

C.P. PROJECT NO. 12-CS-HC-0043

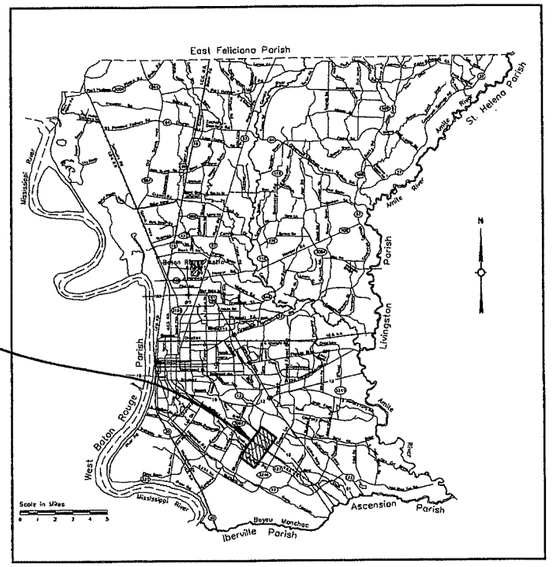

VICINITY MAP

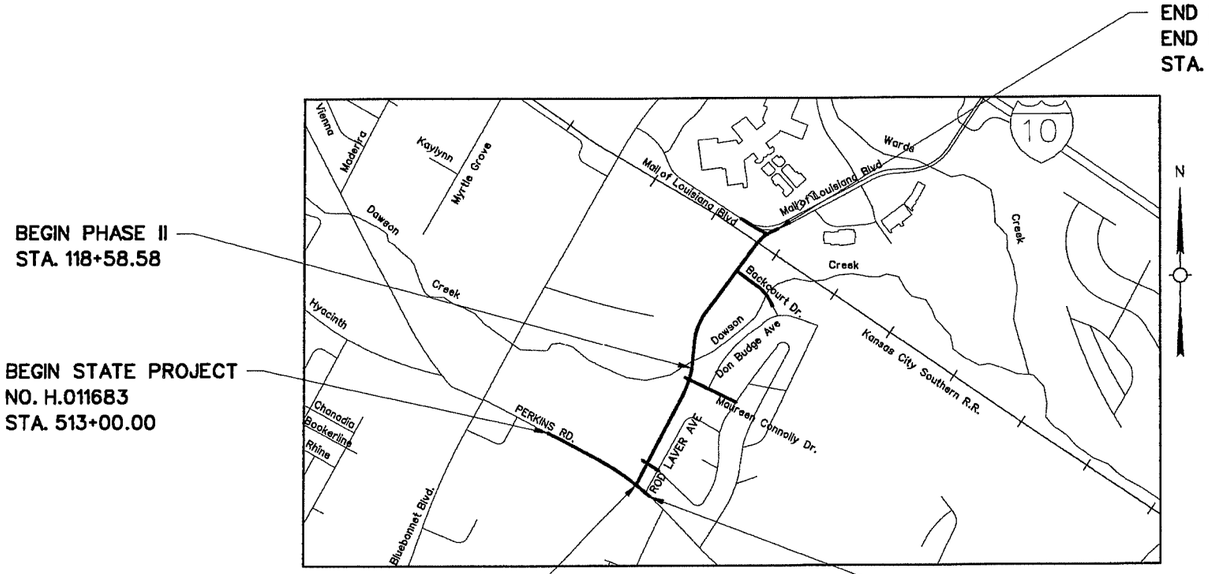

LAYOUT MAP

1000 0 1000 2000 3000

SCALE IN FEET

STATE OF LOUISIANA
MAX O. USREY III
REG. No. 4737
REGISTERED
PROFESSIONAL
LAND SURVEYOR
10/19/16

STATE OF LOUISIANA
ROBERT H. BROOKS III
REG. No. 4712
REGISTERED
PROFESSIONAL
LAND SURVEYOR
10/19/16

EVANS-GRAVES ENGINEERS

DATE	BY	REVISION DESCRIPTION
10/10/19	MOU	CHANGED NAME OF PROJECT

FILE NO. | R/W SHEET NO./TITLE

SHEET NUMBER 308

PARISH: EAST BATON ROUGE
CITY: BATON ROUGE
PROJECT: 12-CS-HC-0043

COMPUTED: RHB
CHECKED: MLR
DETAILED: MLR
CHECKED: MOU
DATE: 10/19/16
SCALE: 1"=1000'

RIGHT OF WAY MAP
C.P. PROJECT NO. 12-CS-HC-0043
MALL OF LOUISIANA BOULEVARD
(PHASE II)
EAST BATON ROUGE PARISH
MALL OF LOUISIANA BOULEVARD

RECORDATION SET
F:\00_PROJECTS\12-500\Sheet_Sets\RIGHT OF WAY\RECORDATION Set Phase 2\12500 Sheet00_RW_ph2.dgn
2/26/2020 10:44

GREENSBURG LAND DISTRICT
T8S - R1E
SECTION 57

NOTES:
1. ALL PIPES AND MONUMENTS SHOWN HEREON WERE FOUND.
2. THE COORDINATES AND BEARINGS SHOWN HEREON ARE BASED ON LOUISIANA STATE PLANE COORDINATE SYSTEM, SOUTH ZONE (NAD 83 (2011) EPOCH 2010.0000) TO CONVERT FROM GRID BEARINGS TO TRUE BEARINGS USE: 0°07'17.6"

BASE STATIONS:

HAMM, AJ7833,	SJBLDF8160	ILSU_DF5754
HAMMOND CORS ARP	SJB GROUP COOP CORS ARP	LOUISIANA STATE U CORS ARP
LAT=N30°30'47.05150"	LAT=N30°23'45.83106"	LAT=N30°24'26.70946"
LONG=W090°28'03.42841"	LONG=W091°06'25.85461"	LONG=W091°10'48.91474"
Y=733115.66	Y=689601.48	Y=693693.12
X=3553447.23	X=3352133.18	X=3329089.84

3. DISTANCES SHOWN ARE HORIZONTAL GROUND DISTANCES. TO CONVERT DISTANCES DERIVED FROM COORDINATES SHOWN HEREON TO HORIZONTAL GROUND DISTANCES, USE SCALE FACTOR: 0.99994768

AREA OF SERVITUDE OVERLAPS			
PARCEL	TOTAL AREA	UNENCUMBRANCED	PREVIOUSLY ENCUMBRANCED
7-1	8.029 AC.	5.876 AC.	2.153 AC.
RR-7-1	12528.1 SQ. FT.	0.000 AC.	12528.1 SQ.FT.

PARK ROWE VILLAGE, L.L.C.
TRACT B-2-A

FAMILY WORSHIP CENTER CHURCH, INC.

BEGIN PHASE II
STA. 118+58.58

290' PUBLIC DRAINAGE SERVITUDE 145' OFF EACH LOT
EXISTING DRAINAGE SERVITUDE

P.T. STA. 116+55.39
Y=684041.6690
X=3357482.1427

115+00

℄ CURVE DATA
P.I. STA. 114+94.89
Y = 683877.1129
X = 3357467.6403
Δ = 23°37'17.2" LT
D = 7°15'09.5"
T = 165.19'
L = 325.69'
R = 790.00'

DAWSON CREEK
℄ DAWSON CREEK
+58.58
66.86'
N05°02'11"E 126.34'
REQUIRED R/W
+78.86
77.80'
N37°00'05"W
46.60'
120+00
LIMITS OF CONSTRUCTION
91.11'
S56°05'46"W
96.61'
STA. 119+19.19
7-1
5.51'
+23.02
3.96'
190.99'
S40°35'26"W

Y=683889.2114
X=3357453.4142
P.I.
℄ MALL OF LOUISIANA BOULEVARD
2-1
N05°02'11.4"E
℄ C.P. PROJECT NO. 12-CS-HC-0043
Y=684382.9395
X=3357527.2583

P.C. STA. 117+84.32
Y=684470.1035
X=3357493.4617

REQUIRED R/W
PARK ROWE VILLAGE, L.L.C.
TRACT B-2-A
STA. 116+74.88
290' PUBLIC DRAINAGE SERVITUDE 145' OFF EACH LOT
EXISTING DRAINAGE SERVITUDE

℄ CURVE DATA
P.I. STA. 122+50.76
Y = 684634.7372
X = 3357534.4102
Δ = 33°29'44.8" RT
D = 3°41'47.4"
T = 466.43'
L = 906.15'
R = 1550.00'

LOT 167
WIMBLEDON ESTATES (2nd FILING)
15' PUBLIC SERVITUDE
LOT 168

PARK ROWE VILLAGE, L.L.C.
TRACT B-1-A-1-A

LEGEND

EXISTING R/W / REQUIRED R/W	RIGHT OF WAY LINE
EXISTING ℄ of A. / REQUIRED ℄ of A.	CONTROL OF ACCESS
EXIST R/W & EXIST ℄ of A. / REQ'D R/W & REQ'D ℄ of A.	RIGHT OF WAY & CONTROL OF ACCESS
	LIMITS OF CONSTRUCTION
	LOT LINE
	APPARENT PROPERTY LINE
	EXISTING SERVITUDE LINE
	SECTION LINE

PARCEL	OWNER	ACQUISITION	AREA
RR-7-1	FAMILY WORSHIP CENTER CHURCH, INC.	ORIG. 269 BNDL. 10380 FEB. 17, 1983	12528.1 SQ. FT.
7-1-D-2			5215.1 SQ. FT.
7-1-D-1			32048.0 SQ. FT.
PS-7-1			2013.3 SQ. FT.
7-1-C-1			0.248 AC.
7-1			8.029 AC.

STATE OF LOUISIANA
ROBERT H. BROOKS III
REG. No. 4712
REGISTERED PROFESSIONAL LAND SURVEYOR
10/19/16

STATE OF LOUISIANA
MAX O. USREY III
REG. No. 4787
REGISTERED PROFESSIONAL LAND SURVEYOR
10/19/16

FILE NO.
R/W SHEET NO. 7

SHEET NUMBER 369

PARISH: EAST BATON ROUGE
CITY: BATON ROUGE
PROJECT: 12-CS-HC-0043

COMPUTED: R. BROOKS
CHECKED: M. USREY
DETAILED: M. ROBERTS
CHECKED: M. USREY
DATE: 10/19/16
SCALE: 1" = 20'

RIGHT OF WAY MAP
C.P. PROJECT NO. 12-CS-HC-0043
MALL OF LOUISIANA BOULEVARD
(PHASE II)
EAST BATON ROUGE PARISH
MALL OF LOUISIANA BOULEVARD

EVANS-GRAVES ENGINEERS

DATE	REVISION DESCRIPTION	BY
10/10/19	CHANGED NAME OF PROJECT	MOU
07/19/17	REVISED AREAS FROM ACRES TO SQUARE FEET	MOU
	REVISED AREA PARCEL 7-1-D-1	

RECORDATION SET
F:\00_PROJECTS\12-500\Sheet_Sets\RIGHT OF WAY\RECORDATION Set Phase 2\12500 Sheet07_RW_ph2.dgn
2/26/2020 10:44

RECORDATION SET
F:\00_PROJECTS\12-500\Sheet_Sets\RIGHT OF WAY\RECORDATION Set Phase 2\12500 Sheet08_RW_ph2.dgn
2/26/2020 10:44

NOTES:
1. ALL PIPES AND MONUMENTS SHOWN HEREON WERE FOUND.

2. THE COORDINATES AND BEARINGS SHOWN HEREON ARE BASED ON LOUISIANA STATE PLANE COORDINATE SYSTEM, SOUTH ZONE (NAD 83 (2011) EPOCH 2010.0000) TO CONVERT FROM GRID BEARINGS TO TRUE BEARINGS USE: 0°07'18.4"

BASE STATIONS:

HAMM, AJ7833,	SJBI, DF8160	ILSU, DF5754
HAMMOND CORS ARP	SJB GROUP COOP CORS ARP	LOUISIANA STATE U CORS ARP
LAT=N30°30'47.05150"	LAT=N30°23'45.83106"	LAT=N30°24'26.70946"
LONG=W090°28'03.42841"	LONG=W091°06'25.85467"	LONG=W091°10'48.91147"
Y=733115.66	Y=689601.48	Y=693693.12
X=3553447.23	X=3352133.18	X=3329089.84

3. DISTANCES SHOWN ARE HORIZONTAL GROUND DISTANCES. TO CONVERT DISTANCES DERIVED FROM COORDINATES SHOWN HEREON TO HORIZONTAL GROUND DISTANCES, USE SCALE FACTOR: 0.99994782

GREENSBURG LAND DISTRICT
T8S - R1E
SECTION 57

FAMILY WORSHIP CENTER CHURCH, INC.

SEE SHEET 20

REQUIRED CONSTRUCTION SERVITUDE
7-1-C-1
REQUIRED CONSTRUCTION SERVITUDE

END PHASE 1
STA. 120+71.14

120+00
+07.34
113.53'
REQUIRED R/W
N24°45'17"E 206.83'
+00.00
85.00'
N22°44'41"E 211.20'
+46.22
85.97'
251.52'
S66°44'52"E
30.00'
S66°44'52"E
248.19'
+74.58
87.85'
+00.00
90.00'
N26°56'34"E 106.07'
REQUIRED R/W
+00.00
95.00'
125+00

N37°00'05"W
46.80'
EXISTING DRAINAGE SERVITUDE
LIMITS OF CONSTRUCTION
N5°02'11.4"E
P.I.
N36°31'56.2"E
LIMITS OF CONSTRUCTION

7-1

Y=684451.8620
X=3357544.8569
℄ MALL OF LOUISIANA BOULEVARD
℄ C.P. PROJECT NO. 12-CS-HC-0043
Y=684843.7052
X=3357715.7647
EXISTING DRAINAGE SERVITUDE
65.00'
Y=684382.9395
X=3357527.2583

290' PUBLIC DRAINAGE SERVITUDE
145' OFF EACH LOT
LIMITS OF CONSTRUCTION
ARC=326.19' R=1485.00' CH=325.54' CHB=S31°21'22"W
+50.00
65.00'
REQUIRED R/W
S10°49'28"W 218.97'
DAWSON CREEK
S40°35'26"W
190.99'
2-1
+98.39
91.36'
REQUIRED R/W
26.97' S51°23'08"W
TRACT B-2-A
+22.19
106.56'
REQUIRED R/W

PARK ROWE VILLAGE, L.L.C.

TRACT B-1-A-1-A

℄ CURVE DATA

P.I. STA. 122+50.75
Y = 684634.7372
X = 3357534.4102
Δ = 33°29'44.8" RT
D = 3°41'47.4"
T = 466.43'
L = 906.15'
R = 1550.00'

290' PUBLIC DRAINAGE SERVITUDE
145' OFF EACH LOT

FAMILY WORSHIP CENTER CHURCH, INC.

STATE OF LOUISIANA
ROBERT H. BROOKS III
REG. No. 4712
REGISTERED PROFESSIONAL
LAND SURVEYOR
10/19/16

STATE OF LOUISIANA
MAX O. USREY III
REG. No. 4727
REGISTERED PROFESSIONAL
LAND SURVEYOR
10/19/16

LEGEND

EXISTING R/W / REQUIRED R/W	RIGHT OF WAY LINE
EXISTING C. of A. / REQUIRED C. of A.	CONTROL OF ACCESS
EXIST R/W & EXIST C. of A. / REQ'D R/W & REQ'D C. of A.	RIGHT OF WAY & CONTROL OF ACCESS
	LIMITS OF CONSTRUCTION
	LOT LINE
	APPARENT PROPERTY LINE
	EXISTING SERVITUDE LINE
	SECTION LINE

PARCEL	OWNER	ACQUISITION	AREA

FILE NO. | R/W SHEET NO. 8

SHEET NUMBER 310

PARISH: EAST BATON ROUGE
CITY: BATON ROUGE
PROJECT: 12-CS-HC-0043

COMPUTED: R. BROOKS
CHECKED: M. USREY
DETAILED: J. LEJEUNE
CHECKED: M. USREY
DATE: 10/19/16
SCALE: 1" = 20'

RIGHT OF WAY MAP
C.P. PROJECT NO. 12-CS-HC-0043
MALL OF LOUISIANA BOULEVARD
(PHASE II)
EAST BATON ROUGE PARISH
MALL OF LOUISIANA BOULEVARD

EVANS-GRAVES ENGINEERS

BY	REVISION DESCRIPTION	DATE
MOU	CHANGED NAME OF PROJECT	10/10/19

RECORDATION SET
F:\00_PROJECTS\12-500\Sheet_Sets\RIGHT OF WAY\RECORDATION Set Phase 2\12500 Sheet09_RW_ph2.dgn
2/26/2020 10:44

NOTES:
1. ALL PIPES AND MONUMENTS SHOWN HEREON WERE FOUND.
2. THE COORDINATES AND BEARINGS SHOWN HEREON ARE BASED ON LOUISIANA STATE PLANE COORDINATE SYSTEM, SOUTH ZONE (NAD 83 (2011) EPOCH 2010.0000) TO CONVERT FROM GRID BEARINGS TO TRUE BEARINGS USE: 0°07'19.8"

BASE STATIONS:

HAMM, AJ7833,	SJBI, DF8160	IL SU, DF5754
HAMMOND CORS ARP	SJB GROUP COOP CORS ARP	LOUISIANA STATE U CORS ARP
LAT=N30°30'47.05150"	LAT=N30°23'45.83106"	LAT=N30°24'26.70946"
LONG=W090°28'03.42841"	LONG=W091°06'25.85461"	LONG=W091°10'48.91474"
Y=733115.66	Y=689601.48	Y=693693.12
X=3553447.23	X=3352133.18	X=3329089.84

3. DISTANCES SHOWN ARE HORIZONTAL GROUND DISTANCES. TO CONVERT DISTANCES DERIVED FROM COORDINATES SHOWN HEREON TO HORIZONTAL GROUND DISTANCES, USE SCALE FACTOR: 0.99994796

GREENSBURG LAND DISTRICT
T8S - R1E
SECTION 57

FAMILY WORSHIP CENTER CHURCH, INC.

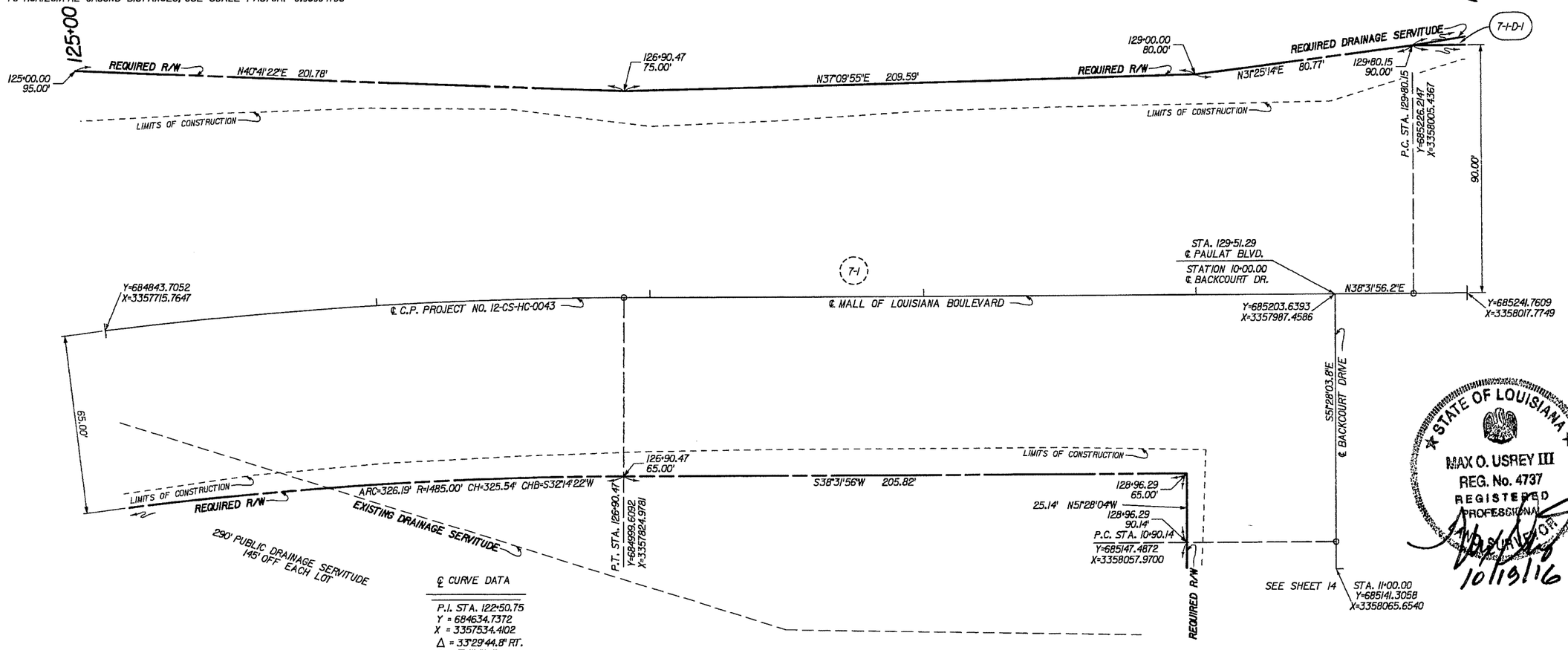

FAMILY WORSHIP CENTER CHURCH, INC.

℄ CURVE DATA

P.I. STA. 122+50.75
Y = 684634.7372
X = 3357534.4102
Δ = 33°29'44.8" RT.
D = 3°41'47.4"
T = 466.43'
L = 906.15'
R = 1550.00'

LEGEND

EXISTING R/W / REQUIRED R/W	RIGHT OF WAY LINE
EXISTING C. of A. / REQUIRED C. of A.	CONTROL OF ACCESS
EXIST R/W & EXIST C. of A. / REQ'D R/W & REQ'D C. of A.	RIGHT OF WAY & CONTROL OF ACCESS
	LIMITS OF CONSTRUCTION
	LOT LINE
	APPARENT PROPERTY LINE
	EXISTING SERVITUDE LINE
	SECTION LINE

PARCEL	OWNER	ACQUISITION	AREA

STATE OF LOUISIANA
MAX O. USREY III
REG. No. 4737
REGISTERED PROFESSIONAL LAND SURVEYOR
10/19/16

STATE OF LOUISIANA
ROBERT H. BROOKS III
REG. No. 4712
REGISTERED PROFESSIONAL LAND SURVEYOR
10/19/16

SHEET NUMBER 311

PARISH: EAST BATON ROUGE
CITY: BATON ROUGE
PROJECT: 12-CS-HC-0043

COMPUTED: R. BROOKS
CHECKED: M. USREY
DETAILED: M. ROBERTS
CHECKED: M. USREY
DATE: 10/19/16
SCALE: 1" = 20'

RIGHT OF WAY MAP
C.P. PROJECT NO. 12-CS-HC-0043
MALL OF LOUISIANA BOULEVARD
(PHASE II)
EAST BATON ROUGE PARISH
MALL OF LOUISIANA BOULEVARD

EVANS-GRAVES ENGINEERS

DATE	REVISION DESCRIPTION	BY
10/10/19	CHANGED NAME OF PROJECT	MOU

FILE NO.
R/W SHEET NO. 9

NOTES:
1. ALL PIPES AND MONUMENTS SHOWN HEREON WERE FOUND.

2. THE COORDINATES AND BEARINGS SHOWN HEREON ARE BASED ON LOUISIANA STATE PLANE COORDINATE SYSTEM, SOUTH ZONE (NAD 83 (2011) EPOCH 2010.0000) TO CONVERT FROM GRID BEARINGS TO TRUE BEARINGS USE: 0°07'21.6"

BASE STATIONS:

HAMM, AJ7833,	SJBI, DF8160	ILSU, DF5754
HAMMOND CORS ARP	SJB GROUP COOP CORS ARP	LOUISIANA STATE U CORS ARP
LAT=N30°30'47.05150"	LAT=N30°23'45.83106"	LAT=N30°24'26.70946"
LONG=W090°28'03.42841"	LONG=W090°06'25.85461"	LONG=W091°10'48.91474"
Y=733115.66	Y=689601.48	Y=693693.12
X=3553447.23	X=3352133.18	X=3329089.84

3. DISTANCES SHOWN ARE HORIZONTAL GROUND DISTANCES. TO CONVERT DISTANCES DERIVED FROM COORDINATES SHOWN HEREON TO HORIZONTAL GROUND DISTANCES, USE SCALE FACTOR: 0.99994809

℄ CURVE DATA

P.I. STA. 132+41.59
Y = 685430.7295
X = 3358168.3032
Δ = 5°00'00.0" LT.
D = 0°57'24.6"
T = 261.44'
L = 522.55'
R = 5988.00'

GREENSBURG LAND DISTRICT
T8S - R1E
SECTION 57

FAMILY WORSHIP CENTER CHURCH, INC.

130+00

REQUIRED DRAINAGE SERVITUDE

LIMITS OF CONSTRUCTION

REQUIRED R/W

N29°39'39"E 540.25'

ARC=413.53' R=5898.00' CH=413.44' CHB=N36°31'25"E

135+00

REQUIRED DRAINAGE SERVITUDE

LIMITS OF CONSTRUCTION

+00.00
90.00'

7-1-D-1

REQUIRED R/W

N37°11'36"E 101.25'

90.00'

7-1

℄ MALL OF LOUISIANA BOULEVARD

Y=685646.4069
X=3358311.2310

Y=685241.7609
X=3358017.7749

℄ C.P. PROJECT NO. 12-CS-HC-0043

N38°31'56"E P.I. N33°31'56"E

STATE OF LOUISIANA
MAX O. USREY III
REG. No. 4737
REGISTERED PROFESSIONAL LAND SURVEYOR
10/19/16

STATE OF LOUISIANA
ROBERT H. BROOKS III
REG. No. 4712
REGISTERED PROFESSIONAL LAND SURVEYOR
10/19/16

LIMITS OF CONSTRUCTION

LIMITS OF CONSTRUCTION

346.44' S39°38'29W

REQUIRED R/W

+30.23
126.71'

82.60'
S51°28'04"E

SEE SHEET 14

+68.48
146.10'

REQUIRED R/W

205.18' S60°50'49"W

FAMILY WORSHIP CENTER CHURCH, INC.

LEGEND

EXISTING R/W	REQUIRED R/W	RIGHT OF WAY LINE
EXISTING C. of A.	REQUIRED C. of A.	CONTROL OF ACCESS
EXIST R/W & EXIST C. of A.	REQ'D R/W & REQ'D C. of A.	RIGHT OF WAY & CONTROL OF ACCESS
		LIMITS OF CONSTRUCTION
		LOT LINE
		APPARENT PROPERTY LINE
		EXISTING SERVITUDE LINE
		SECTION LINE

PARCEL	OWNER	ACQUISITION	AREA

FILE NO. | R/W SHEET NO. 10

RECORDATION SET
F:\00_PROJECTS\12-500\Sheet_Sets\RIGHT OF WAY\RECORDATION Set Phase 2\12500 Sheet10_RW_ph2.dgn
2/26/2020 10:44

SHEET NUMBER 312

RIGHT OF WAY MAP
C.P. PROJECT NO. 12-CS-HC-0043
MALL OF LOUISIANA BOULEVARD
(PHASE II)
EAST BATON ROUGE PARISH
MALL OF LOUISIANA BOULEVARD

PARISH	CITY	PROJECT
EAST BATON ROUGE	BATON ROUGE	12-CS-HC-0043

COMPUTED	DETAILED	CHECKED	DATE	SCALE
R. BROOKS	M. ROBERTS	M. USREY	10/19/16	1" = 20'
CHECKED	CHECKED			
M. USREY	M. USREY			

EVANS-GRAVES ENGINEERS

DATE	REVISION DESCRIPTION	BY
10/10/19	CHANGED NAME OF PROJECT	MOU

RECORDATION SET
F:\00_PROJECTS\12-500\Sheet_Sets\RIGHT OF WAY\RECORDATION Set Phase 2\12500 Sheet11_RW_ph2.dgn
2/26/2020 10:44

NOTES;
1. ALL PIPES AND MONUMENTS SHOWN HEREON WERE FOUND.

2. THE COORDINATES AND BEARINGS SHOWN HEREON ARE BASED ON LOUISIANA STATE PLANE COORDINATE SYSTEM, SOUTH ZONE (NAD 83 (2011) EPOCH 2010.0000) TO CONVERT FROM GRID BEARINGS TO TRUE BEARINGS USE: 0°07'22.5"

BASE STATIONS:

HAMM, AJ7833.	SJBI, DF8160	ILSU, DF5754
HAMMOND CORS ARP	SJB GROUP COOP CORS ARP	LOUISIANA STATE U CORS ARP
LAT=N30°30'47.05150"	LAT=N30°23'45.83106"	LAT=N30°24'26.70946"
LONG=W090°28'03.42841"	LONG=W091°06'25.8546"	LONG=W091°10'48.91474"
Y=733115.66	Y=689601.48	Y=693693.12
X=3553447.23	X=3352133.18	X=3329089.84

3. DISTANCES SHOWN ARE HORIZONTAL GROUND DISTANCES. TO CONVERT DISTANCES DERIVED FROM COORDINATES SHOWN HEREON TO HORIZONTAL GROUND DISTANCES, USE SCALE FACTOR: 0.99994819

GREENSBURG LAND DISTRICT
T7S-R1E & T8S-R1E
SECTION 58 SECTION 57

STATE OF LOUISIANA
ROBERT H. BROOKS III
REG. No. 4712
REGISTERED PROFESSIONAL LAND SURVEYOR
10/19/16

STATE OF LOUISIANA
MAX O. USREY III
REG. No. 4737
REGISTERED PROFESSIONAL SURVEYOR
10/19/16

T7S-R1E SECTION 58
T8S-R1E SECTION 57

℄ CURVE DATA
P.I. STA. 139+27.37
Y = 686002.6482
X = 3358547.3113
Δ = 28°54'38.1" RT.
D = 7°02'19.7"
T = 209.84'
L = 410.73'
R = 814.00'

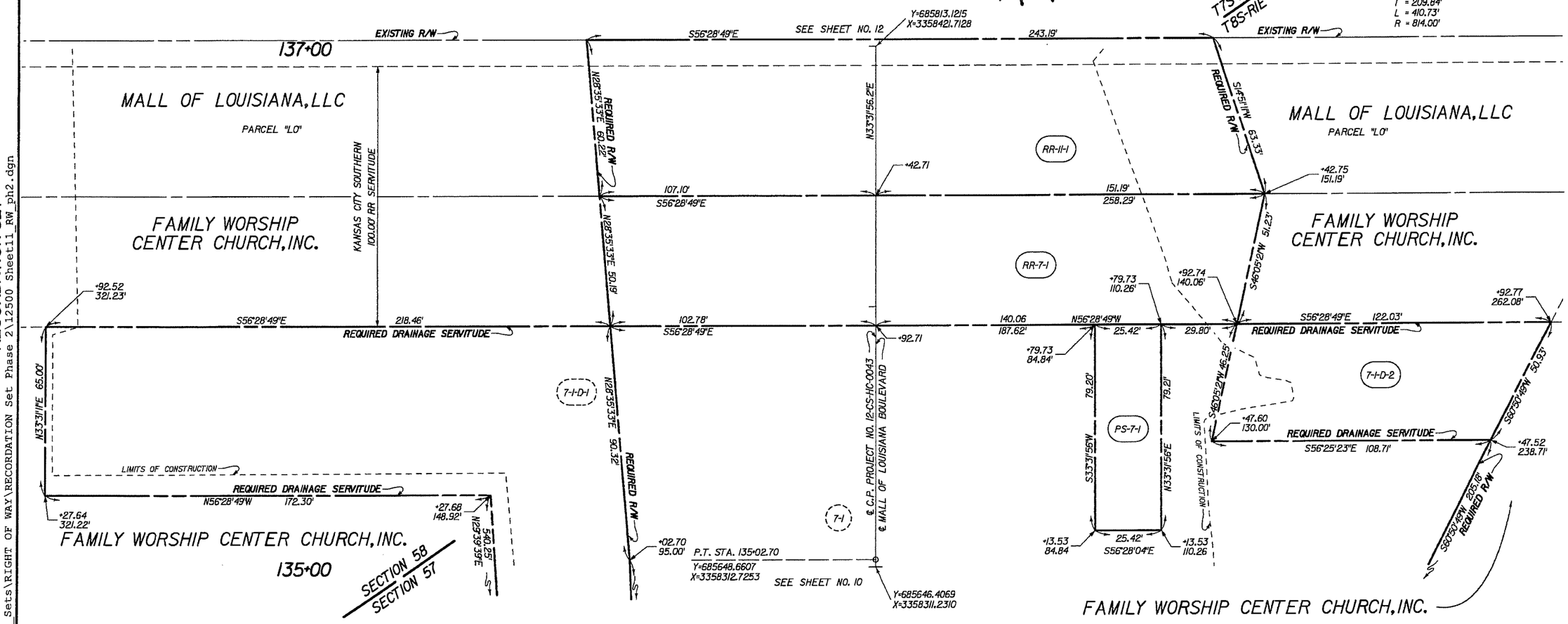

AREA OF SERVITUDE OVERLAPS			
PARCEL	TOTAL AREA	UNENCUMBRANCED	PREVIOUSLY ENCUMBRANCED
RR-11-1	15044.9 SQ. FT.	0.0 SQ. FT.	15044.9 SQ. FT.

LEGEND

EXISTING R/W / REQUIRED R/W	RIGHT OF WAY LINE
EXISTING C. of A. / REQUIRED C. of A.	CONTROL OF ACCESS
EXIST R/W & EXIST C. of A. / REQ'D R/W & REQ'D C. of A.	RIGHT OF WAY & CONTROL OF ACCESS
	LIMITS OF CONSTRUCTION
	LOT LINE
	APPARENT PROPERTY LINE
	EXISTING SERVITUDE LINE
	SECTION LINE

PARCEL	OWNER	ACQUISITION			AREA
RR-11-1	MALL OF LOUISIANA, LLC	ORIG. 71	BNDL. 10679	APRIL 10, 1996	15044.9 SQ. FT.
		ORIG. 86	BNDL. 10679	APRIL 10, 1996	

SHEET NUMBER 313

PARISH EAST BATON ROUGE
CITY BATON ROUGE
PROJECT 12-CS-HC-0043

COMPUTED R. BROOKS
CHECKED M. USREY
DETAILED M. ROBERTS
CHECKED M. USREY
DATE 10/19/16
SCALE 1" = 20'

RIGHT OF WAY MAP
C.P. PROJECT NO. 12-CS-HC-0043
MALL OF LOUISIANA BOULEVARD
(PHASE II)
EAST BATON ROUGE PARISH
MALL OF LOUISIANA BOULEVARD

EVANS-GRAVES ENGINEERS

DATE	REVISION DESCRIPTION	BY
10/10/19	CHANGED NAME OF PROJECT	MOU
07/12/17	REVISED AREAS FROM ACRES TO SQUARE FEET	MOU

FILE NO.
R/W SHEET NO. 11

RECORDATION SET
F:\00_PROJECTS\12-500\Sheet_Sets\RIGHT OF WAY\RECORDATION Set Phase 2\12500 Sheet12_RW_ph2.dgn
2/26/2020 10:44

GREENSBURG LAND DISTRICT
T7S - R1E
SECTION 58

NOTES:
1. ALL PIPES AND MONUMENTS SHOWN HEREON WERE FOUND.
2. THE COORDINATES AND BEARINGS SHOWN HEREON ARE BASED ON LOUISIANA STATE PLANE COORDINATE SYSTEM, SOUTH ZONE (NAD 83 (2011) EPOCH 2010.0000) TO CONVERT FROM GRID BEARINGS TO TRUE BEARINGS USE: 0°07'23.7"

BASE STATIONS:

HAMM, AJ7833,	SJBIDF8160	ILSU.DF5754
HAMMOND CORS ARP	SJB GROUP COOP CORS ARP	LOUISIANA STATE U CORS ARP
LAT=N30°30'47.05150"	LAT=N30°23'45.83106"	LAT=N30°24'26.70946"
LONG=W090°28'03.4284"	LONG=W091°06'25.8546"	LONG=W091°10'48.9147"
Y=733115.66	Y=689601.48	Y=693693.12
X=3553447.23	X=3352133.18	X=3329089.84

3. DISTANCES SHOWN ARE HORIZONTAL GROUND DISTANCES. TO CONVERT DISTANCES DERIVED FROM COORDINATES SHOWN HEREON TO HORIZONTAL GROUND DISTANCES, USE SCALE FACTOR: 0.99994829

LEGEND

EXISTING R/W / REQUIRED R/W	RIGHT OF WAY LINE
EXISTING C. of A. / REQUIRED C. of A.	CONTROL OF ACCESS
EXIST R/W & EXIST. C. of A. / REQ'D R/W & REQ'D C. of A.	RIGHT OF WAY & CONTROL OF ACCESS
	LIMITS OF CONSTRUCTION
	LOT LINE
	APPARENT PROPERTY LINE
	EXISTING SERVITUDE LINE
	SECTION LINE

AREA OF SERVITUDE OVERLAPS

PARCEL	TOTAL AREA	UNENCUMBRANCED	PREVIOUSLY ENCUMBRANCED
12-1	33806.3	24000.2 SQ. FT.	9806.1 SQ. FT.
12-1-D-1	9524.1 SQ. FT.	9224.1 SQ. FT.	300.0 SQ. FT.
12-2-C-1	17042.8 SQ. FT.	13010.9 SQ.FT.	4031.9 SQ.FT.

PARCEL	OWNER	ACQUISITION		AREA
12-4-C-1	ENTERGY GULF STATES LOUISIANA, INC.	ORIG. 290 BNDL. 10943	OCT. 9, 1998	1323.1 SQ. FT.
12-2-C-1	HIGBEE LOUISIANA, LLC	ORIG. 798 BNDL. 12210	DEC. 23, 2009	17042.8 SQ. FT.
12-2				656.6 SQ. FT.
12-3-C-1	MALL OF LOUISIANA, LLC	ORIG. 71 BNDL. 10679	APRIL 10, 1996	1305.0 SQ. FT.
12-3		ORIG. 86 BNDL. 10679	APRIL 10, 1996	242.8 SQ. FT.
12-1-D-1				9524.1 SQ. FT.
12-1				33806.3 SQ. FT.

SHEET NUMBER 314

PARISH	EAST BATON ROUGE
CITY	BATON ROUGE
PROJECT	12-CS-HC-0043
COMPUTED / CHECKED	R. BROOKS / M. USREY
DETAILED / CHECKED	M. ROBERTS / M. USREY
DATE	10/19/16
SCALE	1" = 30'

RIGHT OF WAY MAP
C.P. PROJECT NO. 12-CS-HC-0043
MALL OF LOUISIANA BOULEVARD
(PHASE II)
EAST BATON ROUGE PARISH
MALL OF LOUISIANA BOULEVARD

EVANS-GRAVES ENGINEERS

DATE	REVISION DESCRIPTION	BY
10/10/19	CHANGED NAME OF PROJECT	MOU
07/12/17	REVISED AREAS FROM ACRES TO SQUARE FEET	MOU
	REVISED PARCEL 12-1 ACQUISITION AREA	

STATE OF LOUISIANA
ROBERT H. BROOKS III
REG. No. 4712
REGISTERED PROFESSIONAL LAND SURVEYOR
10/19/16

STATE OF LOUISIANA
MAX O. USREY III
REG. No. 4787
REGISTERED PROFESSIONAL LAND SURVEYOR
10/19/16

FILE NO. | R/W SHEET NO. 12

GREENSBURG LAND DISTRICT
T7S-R1E & T8S-R1E
SECTION 58 SECTION 57

NOTES:
1. ALL PIPES AND MONUMENTS SHOWN HEREON WERE FOUND.
2. THE COORDINATES AND BEARINGS SHOWN HEREON ARE BASED ON LOUISIANA STATE PLANE COORDINATE SYSTEM, SOUTH ZONE (NAD 83 (2011) EPOCH 2010.0000) TO CONVERT FROM GRID BEARINGS TO TRUE BEARINGS USE: 0°07'25.8"

BASE STATIONS:

HAMM, AJ7833,	SJBI,DF8160	ILSU,DF5754
HAMMOND CORS ARP	SJB GROUP COOP CORS ARP	LOUISIANA STATE U CORS ARP
LAT=N30°30'47.05150"	LAT=N30°23'45.83106"	LAT=N30°24'26.70946"
LONG=W090°28'03.42841"	LONG=W091°06'25.85461"	LONG=W091°10'48.91474"
Y=733115.66	Y=689601.48	Y=693693.12
X=3553447.23	X=3352133.18	X=3329089.84

3. DISTANCES SHOWN ARE HORIZONTAL GROUND DISTANCES. TO CONVERT DISTANCES DERIVED FROM COORDINATES SHOWN HEREON TO HORIZONTAL GROUND DISTANCES, USE SCALE FACTOR: 0.99994823

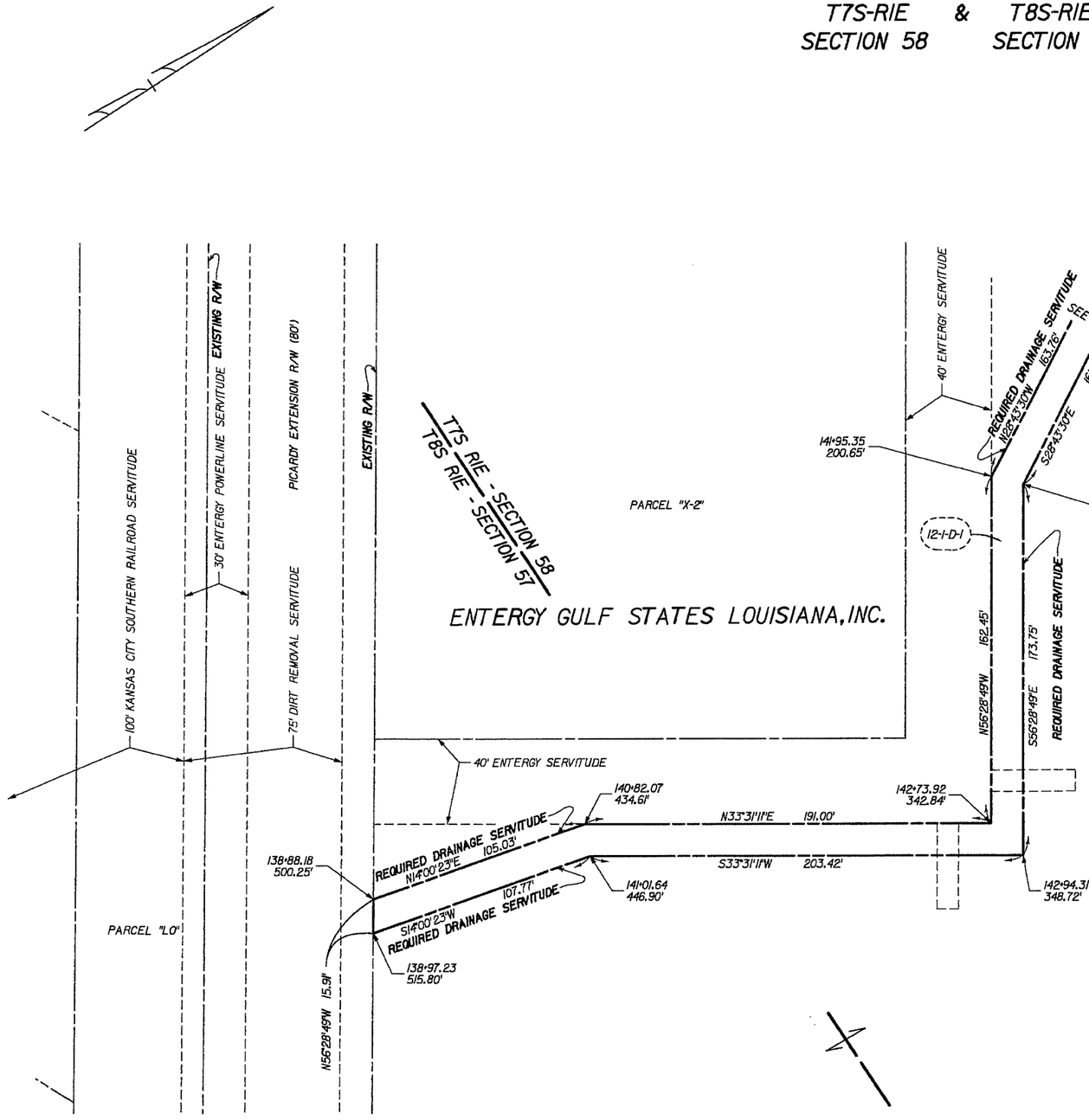

STATE OF LOUISIANA
MAX O. USREY III
REG. No. 4737
REGISTERED PROFESSIONAL
LAND SURVEYOR
10/19/16

STATE OF LOUISIANA
ROBERT H. BROOKS III
REG. No. 4742
REGISTERED PROFESSIONAL
LAND SURVEYOR
10/19/16

LEGEND

EXISTING R/W / REQUIRED R/W	RIGHT OF WAY LINE
EXISTING C. of A. / REQUIRED C. of A.	CONTROL OF ACCESS
EXIST R/W & EXIST C. of A. / REQ'D R/W & REQ'D C. of A.	RIGHT OF WAY & CONTROL OF ACCESS
	LIMITS OF CONSTRUCTION
	LOT LINE
	APPARENT PROPERTY LINE
	EXISTING SERVITUDE LINE
	SECTION LINE

PARCEL	OWNER	ACQUISITION	AREA

FILE NO. | R/W SHEET NO. 13

EVANS-GRAVES ENGINEERS

DATE	REVISION DESCRIPTION	BY
10/10/19	CHANGED NAME OF PROJECT	MOU

RIGHT OF WAY MAP
C.P. PROJECT NO. 12-CS-HC-0043
MALL OF LOUISIANA BOULEVARD
(PHASE II)
EAST BATON ROUGE PARISH
MALL OF LOUISIANA BOULEVARD

SHEET NUMBER	316
PARISH	EAST BATON ROUGE
CITY	BATON ROUGE
PROJECT	12-CS-HC-0043
COMPUTED	R. BROOKS
CHECKED	M. USREY
DETAILED	M. ROBERTS
CHECKED	M. USREY
DATE	10/19/16
SCALE	1" = 30'

RECORDATION SET
F:\00_PROJECTS\12-500\Sheet_Sets\RIGHT OF WAY\RECORDATION Set Phase 2\12500 Sheet13_RW_ph2.dgn
2/26/2020 10:44

NOTES:
1. ALL PIPES AND MONUMENTS SHOWN HEREON WERE FOUND.

2. THE COORDINATES AND BEARINGS SHOWN HEREON ARE BASED ON LOUISIANA STATE PLANE COORDINATE SYSTEM, SOUTH ZONE (NAD 83 (2011) EPOCH 2010.0000) TO CONVERT FROM GRID BEARINGS TO TRUE BEARINGS USE: 0°07'21.6"

BASE STATIONS:

HAMM, AJ7833,	SJBI, DF8160	ILSU, DF5754
HAMMOND CORS ARP	SJB GROUP COOP CORS ARP	LOUISIANA STATE U CORS ARP
LAT=N30°30'47.05150"	LAT=N30°23'45.83106"	LAT=N30°24'26.70946"
LONG=W090°28'03.42841"	LONG=W091°06'25.85461"	LONG=W091°10'48.91474"
Y=733115.66	Y=689601.48	Y=693693.12
X=3553447.23	X=3352133.18	X=3329089.84

3. DISTANCES SHOWN ARE HORIZONTAL GROUND DISTANCES. TO CONVERT DISTANCES DERIVED FROM COORDINATES SHOWN HEREON TO HORIZONTAL GROUND DISTANCES, USE SCALE FACTOR: 0.99994793

GREENSBURG LAND DISTRICT
T8S - R1E
SECTION 57

CITY OF BATON ROUGE
PARISH OF EAST BATON ROUGE

FAMILY WORSHIP CENTER CHURCH, INC.

B.R. CHRISTIAN EDUCATION
LOT D-1

FDIC

LAWRENCE J. BIZETTE, JR., et ux
WIMBLEDON ESTATES
(2nd FILING)
LOT 177
LOT 178

WOOD FRAME/BRICK VENEER RESIDENCE

11+00

15+00

STA. 13+73.68

STA. 14+51.50

STA. 14+74.03

EXISTING 250 DRAINAGE SERV.

EXISTING 10' SERVITUDE

EXISTING PUBLIC 10' SERVITUDE

EXISTING PUBLIC 15' SERVITUDE

EXISTING 250 DRAINAGE SERV.

EXISTING PUBLIC 5' S.W. SERVITUDE

CONC. BLOCK BUILDING

METAL CANOPY

END CONSTRUCTION STA. 16+00.37

REQUIRED CONSTRUCTION SERVITUDE

EXISTING R/W

LIMITS OF CONSTRUCTION

SEE INSET "A"

SEE SHEET NO. 9

℄ BACKCOURT DR.

BACKCOURT DRIVE

P.I.

S55°28'03"E

S30°18'10"E 166.31'

S30°18'10"E REQUIRED R/W 84.48'

S33°05'33"W 60.15' 61.15'

S55°28'03"E 82.60'

REQUIRED R/W

N33°05'33"E 1.00'

S55°17'03"W 54.18'

S55°48'54"W 18.70'

N33°36'29"W 72.74'

S55°48'54"W 95.17'

S34°11'06"E 725.71'

N34°11'06"W 61.04'

S26°31'28"E 61.59'

N37°53'29"W 126.27'

S33°25'51"W 23.06'

S26°31'28"E 33.32'

S34°11'06"E 27.29'

ARC=271.62' R=945.00' CH=270.69' CHB=N43°14'01"W

ARC=22.95' R=945.00' CH=22.95' CHB=N34°18'13"W

P.T. STA. 14+01.85 Y=684916.7387 X=3358267.8579

STA. 14+73.99

STA. 14+74.03

+88.15 52.72'

+99.85 86.53'

+34.23 49.98'

+40.64 36.22'

+46.50 23.62'

+73.68

+73.79

+74.03

+57.50

+74.29 26.10'

+74.46 42.46'

+77.57 55.00'

+74.58 55.00'

+65.35 41.73'

+34.83 24.51'

Y=684753.7092
X=3358377.5368

+00.00 24.83'

+00.37 33.03'

8.21' S53°47'03"W

+11.00 56.59'

14-1 14-2 14-2-C-1 14-3-C-1 14-4-C-1 7-1

STA. 11+00.00
Y=685141.3058
X=3358065.6540

55.00'

INSET "A"
N.T.S.

℄ CURVE DATA
P.I. STA. 12+47.27
Y = 685049.60
X = 3358180.89
Δ = 17°51'34.8" RT.
D = 5°43'46.5"
T = 157.13
L = 311.71'
R = 1000.00'

AREA OF SERVITUDE OVERLAPS			
PARCEL	TOTAL AREA	UNENCUMBRANCED	PREVIOUSLY ENCUMBRANCED
14-4-C-1	1546.6 SQ. FT.	1308.5 SQ. FT.	238.1 SQ. FT.
14-3-C-1	250.6 SQ. FT.	0.0 SQ. FT.	250.6 SQ. FT.
14-2-C-1	308.2 SQ. FT.	177.9 SQ. FT.	130.3 SQ. FT.
14-2	821.4 SQ. FT.	293.4 SQ. FT.	528.0 SQ. FT.
14-1	9440.4 SQ. FT.	0.0 SQ. FT.	9440.4 SQ. FT.

PARCEL	OWNER	ACQUISITION			AREA
14-4-C-1	LAWRENCE J. BIZETTE, JR., et ux	ORIG. 489	BNDL. 10574	FEB. 13, 1985	1546.6 SQ. FT.
14-3-C-1	B.R. CHRISTIAN EDUCATION FOUNDATION	ORIG. 255	BNDL. 12061	JUNE 3, 2008	250.6 SQ. FT.
14-2-C-1	CITY OF BATON ROUGE PARISH OF EAST BATON ROUGE	ORIG. 374	BNDL. 9408	DEC. 4, 1980	308.2 SQ. FT.
14-2					821.4 SQ. FT.
14-1	FDIC	ORIG. 98	BNDL. 10725	AUG. 2, 1996	9440.4 SQ. FT.

LEGEND

EXISTING R/W / REQUIRED R/W	RIGHT OF WAY LINE
EXISTING ℄ of A. / REQUIRED ℄ of A.	CONTROL OF ACCESS
EXIST R/W & EXIST ℄ of A. / REQ'D R/W & REQ'D ℄ of A.	RIGHT OF WAY & CONTROL OF ACCESS
	LIMITS OF CONSTRUCTION
	LOT LINE
	APPARENT PROPERTY LINE
	EXISTING SERVITUDE LINE
	SECTION LINE

STATE OF LOUISIANA
ROBERT H. BROOKS III
REG. No. 4712
REGISTERED PROFESSIONAL LAND SURVEYOR
10/19/16

STATE OF LOUISIANA
MAX O. USREY III
REG. No. 4737
REGISTERED PROFESSIONAL LAND SURVEYOR

SHEET NUMBER 317

PARISH: EAST BATON ROUGE
CITY: BATON ROUGE
PROJECT: 12-CS-HC-0043

COMPUTED: R. BROOKS
CHECKED: M. USREY
DETAILED: M. ROBERTS
CHECKED: M. USREY
DATE: 10/19/16
SCALE: 1" = 20'

RIGHT OF WAY MAP
C.P. PROJECT NO. 12-CS-HC-0043
MALL OF LOUISIANA BOULEVARD
(PHASE II)
EAST BATON ROUGE PARISH
MALL OF LOUISIANA BOULEVARD

EVANS-GRAVES ENGINEERS

DATE	REVISION DESCRIPTION	BY
02/24/20	REVISED OWNERSHIP OF PARCEL 14-1	MOU
10/10/19	CHANGED NAME OF PROJECT	MOU
07/19/17	REVISED AREAS FROM ACRES TO SQUARE FEET	MOU

FILE NO.
R/W SHEET NO. 14

RECORDATION SET
F:\00 PROJECTS\12-500\Sheet_Sets\RIGHT OF WAY\RECORDATION Set Phase 2\12500 Sheet14_RW_ph2.dgn
2/26/2020 10:44

NOTES:
1. ALL PIPES AND MONUMENTS SHOWN HEREON WERE FOUND.

2. THE COORDINATES AND BEARINGS SHOWN HEREON ARE BASED ON LOUISIANA STATE PLANE COORDINATE SYSTEM, SOUTH ZONE (NAD 83 (2011) EPOCH 2010.0000) TO CONVERT FROM GRID BEARINGS TO TRUE BEARINGS USE: 0°07'10.1"

BASE STATIONS:

HAMM, AJ7833,	SJBILDF8160	ILSU,DF5754
HAMMOND CORS ARP	SJB GROUP COOP CORS ARP	LOUISIANA STATE U CORS ARP
LAT=N30°30'47.05150"	LAT=N30°23'45.83106"	LAT=N30°24'26.70946"
LONG=W090°28'03.4284"	LONG=W091°06'25.8546"	LONG=W091°10'48.91474"
Y=733115.66	Y=689601.48	Y=693693.12
X=3553447.23	X=3352133.18	X=3329089.84

3. DISTANCES SHOWN ARE HORIZONTAL GROUND DISTANCES. TO CONVERT DISTANCES DERIVED FROM COORDINATES SHOWN HEREON TO HORIZONTAL GROUND DISTANCES, USE SCALE FACTOR: 0.99994727

GREENSBURG LAND DISTRICT
T8S - R1E
SECTIONS 57 & 58

AREA OF SERVITUDE OVERLAPS			
PARCEL	TOTAL AREA	UNENCUMBRANCED	PREVIOUSLY ENCUMBRANCED
15-3	1577.6 SQ. FT.	1538.0 SQ. FT.	39.6 SQ. FT.
15-2	2174.0 SQ. FT.	2164.13 SQ. FT.	9.9 SQ. FT.
15-1	616.2 SQ. FT.	518.5 SQ. FT.	97.72 SQ. FT.

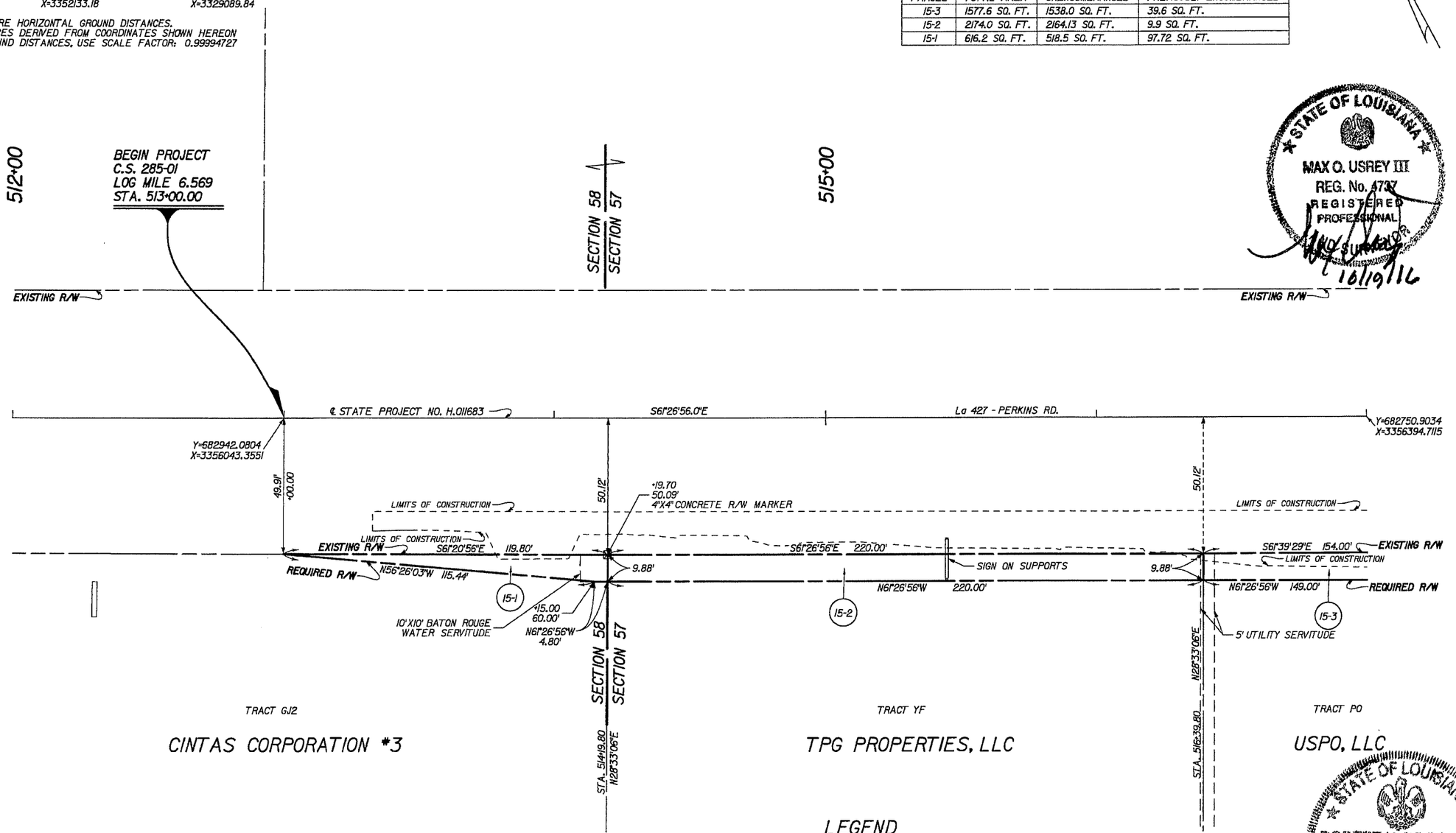

TRACT GJ2

CINTAS CORPORATION #3

TRACT YF

TPG PROPERTIES, LLC

TRACT PO

USPO, LLC

PARCEL	OWNER	ACQUISITION			AREA
15-3	USPO, LLC	ORIG. 951	BNDL. 10963	DEC. 21, 1998	1577.6 SQ. FT.
15-2	TPG PROPERTIES, LLC	ORIG. 628	BNDL. 12436	AUG. 22, 2012	2174.0 SQ. FT.
15-1	CINTAS CORPORATION #3	ORIG. 358	BNDL. 11309	JAN. 22, 2002	616.2 SQ. FT.

LEGEND

EXISTING R/W / REQUIRED R/W	RIGHT OF WAY LINE
EXISTING C. of A. / REQUIRED C. of A.	CONTROL OF ACCESS
EXIST R/W & EXIST C. of A. / REQ'D R/W & REQ'D C. of A.	RIGHT OF WAY & CONTROL OF ACCESS
	LIMITS OF CONSTRUCTION
	LOT LINE
	APPARENT PROPERTY LINE
	EXISTING SERVITUDE LINE
	SECTION LINE

STATE OF LOUISIANA
MAX O. USREY III
REG. No. 4737
REGISTERED PROFESSIONAL LAND SURVEYOR
10/19/16

STATE OF LOUISIANA
ROBERT H. BROOKS III
REG. No. 4712
REGISTERED PROFESSIONAL LAND SURVEYOR
10/19/16

SHEET NUMBER 317

PARISH: EAST BATON ROUGE
CITY: BATON ROUGE
PROJECT: 12-CS-HC-0043

COMPUTED R. BROOKS
CHECKED M. USREY
DETAILED M. ROBERTS
CHECKED M. USREY
DATE 10/19/16
SCALE 1" = 20'

RIGHT OF WAY MAP
C.P. PROJECT NO. 12-CS-HC-0043
MALL OF LOUISIANA BOULEVARD
(PHASE II)
EAST BATON ROUGE PARISH
MALL OF LOUISIANA BOULEVARD

EVANS-GRAVES ENGINEERS

DATE	REVISION DESCRIPTION	BY
10/10/19	CHANGED NAME OF PROJECT	MOU
07/19/17	REVISED AREAS FROM ACRES TO SQUARE FEET	MOU

FILE NO.
R/W SHEET NO. 15

RECORDATION SET
F:\00_PROJECTS\12-500\Sheet_Sets\RIGHT OF WAY\RECORDATION Set Phase 2\12500 Sheet15_RW_ph2.dgn
2/26/2020 10:44

RECORDATION SET
F:\00_PROJECTS\12-500\Sheet_Sets\RIGHT OF WAY\RECORDATION Set Phase 2\12500 Sheet16_RW_ph2.dgn
2/26/2020 10:48

NOTES:
1. ALL PIPES AND MONUMENTS SHOWN HEREON WERE FOUND.
2. THE COORDINATES AND BEARINGS SHOWN HEREON ARE BASED ON LOUISIANA STATE PLANE COORDINATE SYSTEM, SOUTH ZONE (NAD 83 (2011) EPOCH 2010.0000) TO CONVERT FROM GRID BEARINGS TO TRUE BEARINGS USE: 0°07'12.4"

BASE STATIONS:

HAMM A J7833,	SJBI DF8160	ILSU DF5754
HAMMOND CORS ARP	SJB GROUP COOP CORS ARP	LOUISIANA STATE U CORS ARP
LAT=N30°30'47.05150"	LAT=N30°23'45.83106"	LAT=N30°24'26.70945"
LONG=W090°28'03.42841"	LONG=W091°06'25.85461"	LONG=W091°10'48.91474"
Y=733115.66	Y=689601.48	Y=693693.12
X=3553447.23	X=3352133.18	X=3329089.84

3. DISTANCES SHOWN ARE HORIZONTAL GROUND DISTANCES. TO CONVERT DISTANCES DERIVED FROM COORDINATES SHOWN HEREON TO HORIZONTAL GROUND DISTANCES, USE SCALE FACTOR: 0.99994718

GREENSBURG LAND DISTRICT
T8S - R1E
SECTION 57

520+00

AREA OF SERVITUDE OVERLAPS			
PARCEL	TOTAL AREA	UNENCUMBRANCED	PREVIOUSLY ENCUMBRANCED
16-2	1445.7 SQ. FT.	0.0 SQ. FT.	1645.7 SQ. FT.
16-6	600.0 SQ. FT.	0.0 SQ. FT.	600.0 SQ. FT.

STATE OF LOUISIANA
ROBERT H. BROOKS III
REG. No. 4712
REGISTERED PROFESSIONAL LAND SURVEYOR
10/19/16

STATE OF LOUISIANA
MAX O. USREY III
REG. No. 4737
REGISTERED PROFESSIONAL LAND SURVEYOR
10/19/16

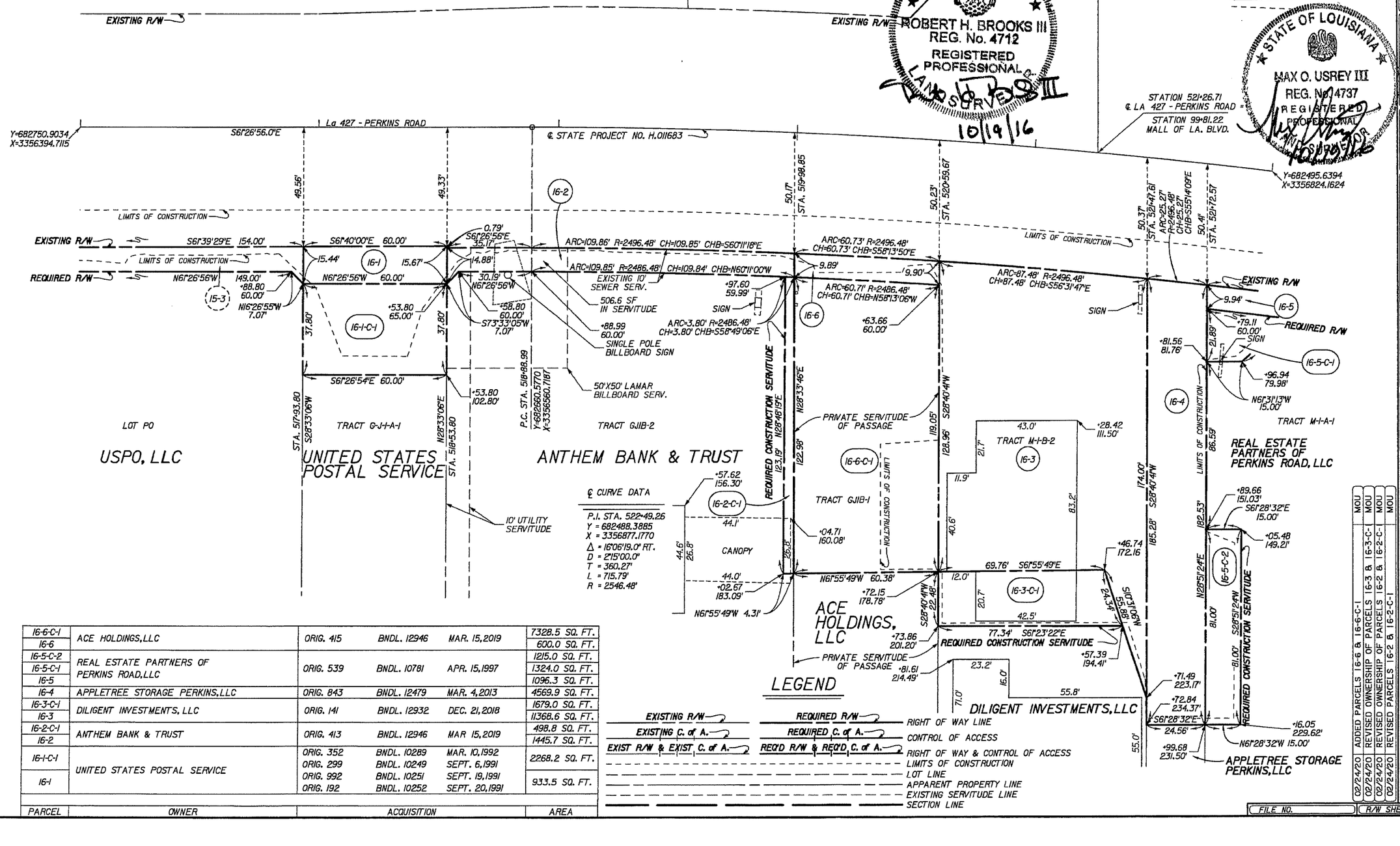

PARCEL	OWNER	ACQUISITION			AREA
16-6-C-1	ACE HOLDINGS, LLC	ORIG. 415	BNDL. 12946	MAR. 15, 2019	7328.5 SQ. FT.
16-6					600.0 SQ. FT.
16-5-C-2	REAL ESTATE PARTNERS OF PERKINS ROAD, LLC	ORIG. 539	BNDL. 10781	APR. 15, 1997	1215.0 SQ. FT.
16-5-C-1					1324.0 SQ. FT.
16-5					1096.3 SQ. FT.
16-4	APPLETREE STORAGE PERKINS, LLC	ORIG. 843	BNDL. 12479	MAR. 4, 2013	4569.9 SQ. FT.
16-3-C-1	DILIGENT INVESTMENTS, LLC	ORIG. 141	BNDL. 12932	DEC. 21, 2018	1679.0 SQ. FT.
16-3					11368.6 SQ. FT.
16-2-C-1	ANTHEM BANK & TRUST	ORIG. 413	BNDL. 12946	MAR 15, 2019	498.8 SQ. FT.
16-2					1445.7 SQ. FT.
16-1-C-1	UNITED STATES POSTAL SERVICE	ORIG. 352	BNDL. 10289	MAR. 10, 1992	2268.2 SQ. FT.
		ORIG. 299	BNDL. 10249	SEPT. 6, 1991	
16-1		ORIG. 992	BNDL. 10251	SEPT. 19, 1991	933.5 SQ. FT.
		ORIG. 192	BNDL. 10252	SEPT. 20, 1991	

LEGEND

EXISTING R/W — REQUIRED R/W — RIGHT OF WAY LINE
EXISTING C. of A. — REQUIRED C. of A. — CONTROL OF ACCESS
EXIST R/W & EXIST C. of A. — REQ'D R/W & REQ'D C. of A. — RIGHT OF WAY & CONTROL OF ACCESS
LIMITS OF CONSTRUCTION
LOT LINE
APPARENT PROPERTY LINE
EXISTING SERVITUDE LINE
SECTION LINE

DATE	REVISION DESCRIPTION	BY
02/24/20	ADDED PARCELS 16-6 & 16-6-C-1	MOU
02/24/20	REVISED OWNERSHIP OF PARCELS 16-3 & 16-3-C-1	MOU
02/24/20	REVISED OWNERSHIP OF PARCELS 16-2 & 16-2-C-1	MOU
02/24/20	REVISED PARCELS 16-2 & 16-2-C-1	MOU
10/10/19	ADDED PARCELS 16-2-C-1, 16-3-C-1, & 16-5-C-2	MOU
10/10/19	REVISED PARCELS 16-3, 16-4, 16-5, AND 16-5-C-1	MOU
10/10/19	CHANGED NAME OF PROJECT	MOU
5/1/18	CHANGE NAME OF PROJECT	MOU
07/19/17	REVISED AREAS FROM ACRES TO SQUARE FEET	MOU

EVANS-GRAVES ENGINEERS

COMPUTED	R. BROOKS
CHECKED	M. USREY
DETAILED	M. ROBERTS
CHECKED	M. USREY
DATE	10/19/16
SCALE	1" = 20'

PARISH	EAST BATON ROUGE	CITY	BATON ROUGE	PROJECT	12-CS-HC-0043

SHEET NUMBER 3/8

RIGHT OF WAY MAP
C.P. PROJECT NO. 12-CS-HC-0043
MALL OF LOUISIANA BOULEVARD
(PHASE II)
EAST BATON ROUGE PARISH
MALL OF LOUISIANA BOULEVARD

FILE NO.
R/W SHEET NO. 16

RECORDATION SET
F:\00_PROJECTS\12-500\Sheet_Sets\RIGHT OF WAY\RECORDATION Set Phase 2\12500 Sheet17_RW_ph2.dgn 2/26/2020 10:44

GREENSBURG LAND DISTRICT
T8S - R1E
SECTION 57

NOTES:
1. ALL PIPES AND MONUMENTS SHOWN HEREON WERE FOUND.
2. THE COORDINATES AND BEARINGS SHOWN HEREON ARE BASED ON LOUISIANA STATE PLANE COORDINATE SYSTEM, SOUTH ZONE (NAD 83 (2011) EPOCH 2010.0000) TO CONVERT FROM GRID BEARINGS TO TRUE BEARINGS USE: 0°07'14.7"

BASE STATIONS:

HAMM, AJ7833,	SJBI, DF8160	ILSU, DF5754
HAMMOND CORS ARP	SJB GROUP COOP CORS ARP	LOUISIANA STATE U CORS ARP
LAT=N30°30'47.05150"	LAT=N30°23'45.83106"	LAT=N30°24'26.70946"
LONG=W090°28'03.42841"	LONG=W091°06'25.85461"	LONG=W091°10'48.91474"
Y=733115.66	Y=689601.48	Y=693693.12
X=3553447.23	X=3352133.18	X=3329089.84

3. DISTANCES SHOWN ARE HORIZONTAL GROUND DISTANCES. TO CONVERT DISTANCES DERIVED FROM COORDINATES SHOWN HEREON TO HORIZONTAL GROUND DISTANCES, USE SCALE FACTOR: 0.99994710

50.00'
EXISTING R/W
EXISTING R/W
ROD LAVER AVE.
525+00
EXISTING R/W
END PROJECT
C.S. 285-01
LOG MILE 6.317
STA. 526+30.53
EXISTING R/W
N61°26'56"W P.I.
℄ STATE PROJECT NO. H.011683
S45°20'37"E
Y=682217.0729
X=3357151.7665
LA 427 - PERKINS ROAD
Y=682495.6394
X=3356824.1624
50.69'
LIMITS OF CONSTRUCTION
LIMITS OF CONSTRUCTION
ARC=307.44' R=2496.48' CH=307.25' CHB=S48°52'21"E
EXISTING R/W
16-5
ARC=110.94' R=2496.48'
CH=110.93' CHB=S53°40'22"E
10.00'
EXISTING R/W
SIGN
10.12'
ARC=202.38' R=2486.48'
CH=202.33' CHB=N50°01'59"W
17-1
N52°01'44"W 103.00' REQUIRED R/W
+00.00
60.00'
+04.79
50.11'
P.T. STA. 526+04.78
Y=682235.1711
X=3357133.4499
SIGN
REQUIRED R/W
ARC=110.95' R=2486.48'
CH=110.94' CHB=N53°38'35"W
ARC=85.79' R=2476.48'
CH=85.78' CHB=N53°19'17"W
REQUIRED CONSTRUCTION SERVITUDE
LIMITS OF CONSTRUCTION
S77°18'08"W
13.37'
16-5-C-1
N28°52'13"E
STA. 522+63.48
TRACT M-1-A-1

℄ CURVE DATA
P.I. STA. 522+49.26
Y = 682488.3885
X = 3356877.1770
Δ = 16°06'19.0" RT.
D = 2°15'00.0"
T = 360.27'
L = 715.79'
R = 2546.48'

TRACT A
FIRST BAPTIST CHURCH OF BATON ROUGE

REAL ESTATE PARTNERS
OF PERKINS ROAD, LLC

17-1	FIRST BAPTIST CHURCH OF BATON ROUGE	ORIG. 978	BNDL. 11051	SEPT. 15, 1999	2555.3 SQ. FT.
PARCEL	OWNER	ACQUISITION			AREA

LEGEND

EXISTING R/W / REQUIRED R/W	RIGHT OF WAY LINE
EXISTING C. of A. / REQUIRED C. of A.	CONTROL OF ACCESS
EXIST R/W & EXIST C. of A. / REQ'D R/W & REQ'D C. of A.	RIGHT OF WAY & CONTROL OF ACCESS
	LIMITS OF CONSTRUCTION
	LOT LINE
	APPARENT PROPERTY LINE
	EXISTING SERVITUDE LINE
	SECTION LINE

STATE OF LOUISIANA
MAX O. USREY III
REG. No. 4737
REGISTERED
PROFESSIONAL
LAND SURVEYOR
10/19/16

STATE OF LOUISIANA
ROBERT H. BROOKS III
REG. No. 4712
REGISTERED
PROFESSIONAL
LAND SURVEYOR
10/19/16

SHEET NUMBER 319

RIGHT OF WAY MAP
C.P. PROJECT NO. 12-CS-HC-0043
MALL OF LOUISIANA BOULEVARD
(PHASE II)
EAST BATON ROUGE PARISH
MALL OF LOUISIANA BOULEVARD

COMPUTED	R. BROOKS	PARISH	EAST BATON ROUGE
CHECKED	M. USREY		
DETAILED	M. ROBERTS	CITY	BATON ROUGE
CHECKED	M. USREY		
DATE	10/19/16	PROJECT	12-CS-HC-0043
SCALE	1" = 20'		

EVANS-GRAVES ENGINEERS

DATE	REVISION DESCRIPTION	BY
10/10/19	REVISED PARCEL 16-5-C-1.	MOU
10/10/19	CHANGED NAME OF PROJECT	MOU
07/19/17	REVISED AREAS FROM ACRES TO SQUARE FEET	MOU

FILE NO. | R/W SHEET NO. 17

RECORDATION SET
F:\00_PROJECTS\12-500\Sheet_Sets\RIGHT OF WAY\RECORDATION Set Phase 2\12500 Sheet18_RW_ph2.dgn 2/26/2020 10:44

GREENSBURG LAND DISTRICT
T8S - R1E
SECTIONS 57,58 & 70

BEGIN PROJECT
C.S. 285-01
LOG MILE 6.569
STA. 513+00.00

END PROJECT
C.S. 285-01
LOG MILE 6.317
STA. 526+30.53

℄ STATE PROJECT NO. H.011683
La 427 - PERKINS ROAD

TRACT B-1-B

LOT C

ROD LAVER AVE.

510+00

CINTAS CORPORATION #3
R.A.=4.423 Ac.
(PER DEED)

515+00

TPG PROPERTIES, LLC
R.A.=2.635 Ac.
(PER DEED)

USPO, LLC
R.A.=2.230 Ac.
(PER DEED)

520+00

525+00

SECTION 58 | SECTION 57
SECTION 70

SECTION 57
SECTION 70 | SECTION 71

UNITED POSTAL SERVICE
R.A.=34.508 Ac.
(PER DEED)

ANTHEM BANK & TRUST
R.A.=33323.4 SQ. FT.
(PER DEED)

ACE HOLDINGS, LLC
R.A.=1.991 Ac.
(PER DEED)

DILIGENT INVESTMENTS, LLC
R.A.= 10342.4 SQ. FT.
(PER DEED)

APPLETREE STORAGE PROPERTIES, LLC
R.A.=1.386 Ac.
(PER DEED)

REAL ESTATE PARTNERS OF PERKINS ROAD, LLC
R.A.=2751.7 SQ. FT.
(PER DEED)

FIRST BAPTIST CHURCH
OF BATON ROUGE, LOUISIANA
R.A.=8.591 Ac.
(PER DEED)

STATE OF LOUISIANA
ROBERT H. BROOKS III
REG. No. 4712
REGISTERED
PROFESSIONAL
LAND SURVEYOR
10/19/16

STATE OF LOUISIANA
MAX O. USREY III
REG. No. 4737
REGISTERED
PROFESSIONAL
LAND SURVEYOR
10/19/16

LEGEND

EXISTING R/W	REQUIRED R/W	RIGHT OF WAY LINE
EXISTING C. of A.	REQUIRED C. of A.	CONTROL OF ACCESS
EXIST R/W & EXIST C. of A.	REQ'D R/W & REQ'D C. of A.	RIGHT OF WAY & CONTROL OF ACCESS
		LIMITS OF CONSTRUCTION
		LOT LINE
		APPARENT PROPERTY LINE
		EXISTING SERVITUDE LINE
		SECTION LINE

SHEET NUMBER 320

PARISH	EAST BATON ROUGE
CITY	BATON ROUGE
PROJECT	12-CS-HC-0043

COMPUTED R. BROOKS
CHECKED M. USREY
DETAILED M. ROBERTS
CHECKED M. USREY
DATE 10/19/16
SCALE 1" = 100'

RIGHT OF WAY MAP
C.P. PROJECT NO. 12-CS-HC-0043
MALL OF LOUISIANA BOULEVARD
(PHASE II)
EAST BATON ROUGE PARISH
MALL OF LOUISIANA BOULEVARD

EVANS-GRAVES ENGINEERS

DATE	REVISION DESCRIPTION	BY
02/24/20	REVISED TO CONFORM WITH SHEET 16	MOU
10/10/19	CHANGE NAME OF PROJECT	MOU
07/19/17	REVISED REMAINING AREAS FROM ACRES TO SQUARE FEET	MOU

FILE NO.

R/W SHEET NO. 18

RECORDATION SET
F:\00_PROJECTS\12-500\Sheet_Sets\RIGHT OF WAY\RECORDATION Set Phase 2\12500 Sheet19_RW_ph2.dgn
2/26/2020 10:44

GREENSBURG LAND DISTRICT

T7S - R1E
SECTION 58

T8S - R1E
SECTION 57

HIGBEE LOUISIANA,LLC
R.A.=10.557 Ac.
(PER DEED)

MALL OF LOUISIANA,LLC
R.A.=29795.0 SQ. FT.
(PER DEED)

FAMILY WORSHIP CENTER CHURCH,INC.
R.A.=3.784 Ac.
(PER DEED)

BEGIN PHASE II
STA. 118+58.58

SEC 58
SEC 57

SEC 57
SEC 58

FAMILY WORSHIP CENTER CHURCH,INC.
R.A.=20.868 Ac.
(PER DEED)

DAWSON CREEK

110+00
115+00
120+00
125+00
130+00
135+00
140+00

T7S - R1E
T8S - R1E

℄ L&A R.R.

℄ MALL OF LOUISIANA BOULEVARD

BACKCOURT DRIVE

END PHASE II
STA. 143+22.00

145+00

MALL OF LOUISIANA,LLC
R.A.=26.967 Ac.
(PER DEED)

MALL OF LOUISIANA BLVD.

FAMILY WORSHIP CENTER CHURCH,INC.
R.A.=2.966 Ac.
(PER DEED)

FDIC
R.A.=2896.7 SQ. FT.
(PER DEED)

CITY OF BATON ROUGE
PARISH OF EAST BATON ROUGE
R.A.=7753.7 SQ. FT.
(PER DEED)

FDIC
R.A.=1.541 Ac.
(PER DEED)

MALL OF LOUISIANA,LLC
R.A.=1.941 Ac.
(PER DEED)

MALL OF LOUISIANA,LLC
R.A.=24.860 Ac.
(PER DEED)

SEC 58
SEC 57

T7S - R1E
T8S - R1E

LEGEND

EXISTING R/W	REQUIRED R/W	RIGHT OF WAY LINE
EXISTING C. of A.	REQUIRED C. of A.	CONTROL OF ACCESS
EXIST R/W & EXIST C. of A.	REQ'D R/W & REQ'D C. of A.	RIGHT OF WAY & CONTROL OF ACCESS
		LIMITS OF CONSTRUCTION
		LOT LINE
		APPARENT PROPERTY LINE
		EXISTING SERVITUDE LINE
		SECTION LINE

STATE OF LOUISIANA
MAX O. USREY III
REG. No. 4737
REGISTERED
PROFESSIONAL
LAND SURVEYOR
10/19/16

STATE OF LOUISIANA
ROBERT H. BROOKS III
REG. No. 4712
REGISTERED
PROFESSIONAL
LAND SURVEYOR
10/19/16

SHEET NUMBER 321

PARISH	EAST BATON ROUGE
CITY	BATON ROUGE
PROJECT	12-CS-HIC-0043
COMPUTED	R. BROOKS
CHECKED	M. USREY
DETAILED	M. ROBERTS
CHECKED	M. USREY
DATE	10/19/16
SCALE	1" = 200'

RIGHT OF WAY MAP
C.P. PROJECT NO. 12-CS-HIC-0043
MALL OF LOUISIANA BOULEVARD
(PHASE II)
EAST BATON ROUGE PARISH
MALL OF LOUISIANA BOULEVARD

EVANS-GRAVES ENGINEERS

DATE	REVISION DESCRIPTION	BY
02/24/20	REVISED TO CONFORM WITH SHEET 14	MOU
10/10/19	CHANGE NAME OF PROJECT	MOU
07/19/17	REVISED REMAINING AREAS FROM ACRES TO SQUARE FEET	MOU

FILE NO.

R/W SHEET NO. 19

NOTES:
1. ALL PIPES AND MONUMENTS SHOWN HEREON WERE FOUND.

2. THE COORDINATES AND BEARINGS SHOWN HEREON ARE BASED ON LOUISIANA STATE PLANE COORDINATE SYSTEM, SOUTH ZONE (NAD 83 (2011) EPOCH 2010.0000) TO CONVERT FROM GRID BEARINGS TO TRUE BEARINGS USE: 0°07'17.6"

BASE STATIONS:

HAMM, AJ7833,	SJBI,DF8160	ILSU,DF5754
HAMMOND CORS ARP	SJB GROUP COOP CORS ARP	LOUISIANA STATE U CORS ARP
LAT=N30°30'47.05150"	LAT=N30°23'45.83106"	LAT=N30°24'26.70946"
LONG=W090°28'03.42841"	LONG=W091°06'25.85461"	LONG=W091°10'48.91474"
Y=733115.659	Y=689601.479	Y=693693.123
X=3553447.232	X=3352133.176	X=3329089.842

3. DISTANCES SHOWN ARE HORIZONTAL GROUND DISTANCES. TO CONVERT DISTANCES DERIVED FROM COORDINATES SHOWN HEREON TO HORIZONTAL GROUND DISTANCES, USE SCALE FACTOR: 0.99994786

GREENSBURG LAND DISTRICT
T8S - R1E
SECTION 57

SECTION 58
SECTION 57

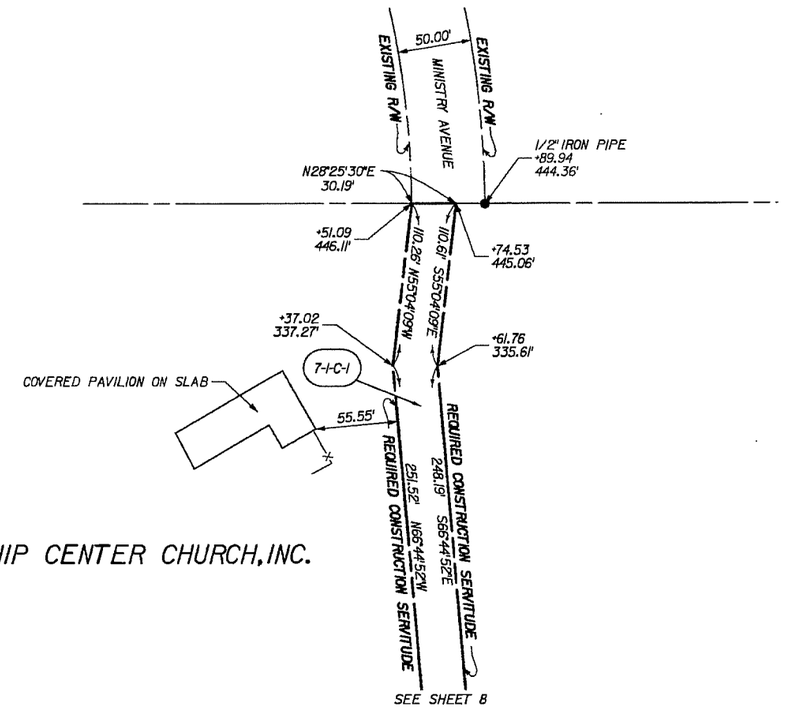

FAMILY WORSHIP CENTER CHURCH, INC.

SECTION 58
SECTION 57

LEGEND

EXISTING R/W / REQUIRED R/W	RIGHT OF WAY LINE
EXISTING C. of A. / REQUIRED C. of A.	CONTROL OF ACCESS
EXIST R/W & EXIST C. of A. / REQ'D R/W & REQ'D C. of A.	RIGHT OF WAY & CONTROL OF ACCESS
	LIMITS OF CONSTRUCTION
	LOT LINE
	APPARENT PROPERTY LINE
	EXISTING SERVITUDE LINE
	SECTION LINE

PARCEL	OWNER	ACQUISITION	AREA

STATE OF LOUISIANA
MAX O. USREY III
REG. No. 4737
REGISTERED PROFESSIONAL LAND SURVEYOR
10/10/19

STATE OF LOUISIANA
ROBERT H. BROOKS III
REG. No. 4712
REGISTERED PROFESSIONAL LAND SURVEYOR
10/10/19

EVANS-GRAVES ENGINEERS

DATE	REVISION DESCRIPTION	BY
10/10/19	CHANGE NAME OF PROJECT	MOU

FILE NO.
R/W SHEET NO. 20

SHEET NUMBER 322

PARISH	EAST BATON ROUGE
CITY	BATON ROUGE
PROJECT	12-CS-HC-0043

COMPUTED	R. BROOKS
CHECKED	M. USREY
DETAILED	J. LEJEUNE
CHECKED	M. USREY
DATE	10/10/19
SCALE	1" = 50'

RIGHT OF WAY MAP
C.P. PROJECT NO. 12-CS-HC-0043
MALL OF LOUISIANA BOULEVARD
(PHASE II)
EAST BATON ROUGE PARISH
MALL OF LOUISIANA BOULEVARD

RECORDATION SET
F:\00_PROJECTS\12-500\Sheet_Sets\RIGHT OF WAY\RECORDATION Set Phase 2\12500 Sheet20_RW_ph2.dgn
2/26/2020 10:44

3/20/14 10:43

Report Form: LADOTD - ENGLISH Project File: P:\16\167100510\00\GINT\CITY PARISH - PICARDY-PERKINS - HIGHLAND-BURBANK BORING LOGS.GPJ

DEPTH Feet	GRAPHIC	SOIL TYPE AND COLOR	WET DENSITY	MOISTURE CONTENT	LIQUID LIMIT	PLASTICITY INDEX	% PASSING #200	SPT or UU	FAILURE MODE/ SPT TERMINATION	SAMPLE TYPE NUMBER	ELEVATION
0		Stiff, tan, CLAY, (CL) with silt								1	19.6
		Medium stiff, tan and gray, CLAY, (CL) with silt and ferrous nodules		25	49	31				2	
		Medium stiff, tan and gray, CLAY, (CL) with silt and calcareous nodules	119	26				0.50@2.01	YLD.	3	
10		Medium stiff, tan and gray, CLAY, (CL) with silt and trace sand	126	30				0.52	YLD.	4 5	9.6
		Medium stiff, tan and gray, CLAY, (CL) with silt and calcareous nodules									
		Soft, tan and gray, CLAY, (CL) with silt	130	25				0.44@5.63	M.S.	6	
20		Medium stiff, tan and gray, CLAY, (CL) with silt and silt streaks	127	24				0.57	YLD.	7	-0.4
		Bottom of hole at 20 feet Backfilled with grout upon completion.									
30											-10.4
40											-20.4
50											-30.4
60											-40.4
70											-50.4
80											-60.4
90											-70.4
100											-80.4
110											-90.4
120											-100.4
130											-110.4
140											-120.4

DRILL RIG AND EQUIPMENT
DRILL RIG MODEL: ARDCO ATV
DRILLING METHOD: Dry 0' - 8' / Wet >8'
HOLE DIAMETER: 4"
SPT HAMMER / ETR: Safety Hammer/Cathead

PL NM LL
10 20 30 40 50 60 70 80 90

BORING NO. 9	STA.:	WATER LEVEL: 8' ATD
LATITUDE: 30.38294	OFFSET:	
LONGITUDE: -91.09006	DATE TAKEN: 1/10/2014	BACKFILL METHOD: Grout
LRS ID:	STR. NO.:	SQD. LDR.:

DEPTH Feet	GRAPHIC	SOIL TYPE AND COLOR	WET DENSITY	MOISTURE CONTENT	LIQUID LIMIT	PLASTICITY INDEX	% PASSING #200	SPT or UU	FAILURE MODE/ SPT TERMINATION	SAMPLE TYPE NUMBER	ELEVATION
0		Stiff, brown, CLAY, (CH) with organic matter roots								1	19.7
		Medium stiff, tan and gray, CLAY, (CH) with ferrous nodules	126	31				0.84	YLD.	2	
		Medium stiff, tan and gray, CLAY, (CL) with silt and calcareous nodules	127	28	42	22		0.68@2.01	YLD.	3	
10		Stiff, tan and gray, CLAY, (CL)	127	24				1.68	YLD.	4 5	9.7
		Stiff, tan and gray, CLAY, (CL) with silt, calcareous nodules and ferrous nodules									
		Medium stiff, tan and gray, CLAY, (CH)	127	23				0.83	YLD.	6	
20		Stiff, tan and gray, CLAY, (CH)	132	24				1.39	YLD.	7	-0.3
		Bottom of hole at 20 feet Backfilled with grout upon completion.									
30											-10.3
40											-20.3
50											-30.3
60											-40.3
70											-50.3
80											-60.3
90											-70.3
100											-80.3
110											-90.3
120											-100.3
130											-110.3
140											-120.3

DRILL RIG AND EQUIPMENT
DRILL RIG MODEL: ARDCO ATV
DRILLING METHOD: Dry 0' - 4' / Wet >4'
HOLE DIAMETER: 4"
SPT HAMMER / ETR: Safety Hammer/Cathead

PL NM LL
10 20 30 40 50 60 70 80 90

BORING NO. 10	STA.:	WATER LEVEL: 4' ATD
LATITUDE: 30.38381	OFFSET:	
LONGITUDE: -91.08872	DATE TAKEN: 1/10/2014	BACKFILL METHOD: Grout
LRS ID:	STR. NO.:	SQD. LDR.:

STANDARD ABBREVIATIONS & DEFINITIONS

CL

N.P. = Non-Plastic
ORG. = Organic

FAILURE MODE:
M.S. = Multiple Shear SL. = Slump
S/S = Slickensides YLD. = Yield
V.S. = Vertical Shear 60 S. = Shear Angle

SPT TERMINATION, AASHTO T 206
1 = 7.2.1 - 50 Blows Within A 6" Interval
2 = 7.2.2 - 100 Blows Total
3 = 7.2.3 - No Advancement for 10 Blows
4 = 7.2.4 - Sampler Driven the Entire 18"
5 = Non-standard

SOIL PROPERTIES

⊗ = SOIL TYPE nomenclature is based on ASTM D 2487
WET DENSITY = Wet density of in-place soil, (pounds per cu. ft.) determined by AASHTO T 208.
MOISTURE CONTENT = Moisture Content of in-place soil, expressed as a percentage of the dry weight of the soil, (%), determined by DOTD TR 403, Method B.
LIQUID LIMIT & PLASTICITY INDEX = Atterberg limits and indices, DOTD TR 428
SPT = Standard Penetration Test, AASHTO T 206, number of blows per each 6 inch increment, unless amount of penetration is shown
UU = Unconsolidated Undrained triaxial test, AASHTO T 296, compressive strength (tons per sq. ft.), of one specimen confined at noted pressure (pounds per sq. in.)
C = Soil cohesion (tons per sq. ft.)
ϕ = Soil angle of internal friction (degrees)
Δ = Unconsolidated Undrained triaxial test, AASHTO T 296, three specimens, (c - ϕ).
+ = Consolidated drained direct shear test, AASHTO T 236, (c - ϕ).
* = Hydrometer test performed

MISCELLANEOUS:

C-3 = Location and Identification of thin-walled tube sample, AASHTO T 207
C-3 = Location and Identification of thin-walled tube sample, AASHTO T 207, with a portion of the sample saved for consolidation testing
D-3 = Location and Identification of SPT sample, AASHTO T 206
NO RECV. = No Recovery, unable to recover sample for testing or classification.
DIST. = Disturbed sample recovered with thin-walled tube sampler.
▽ 24 HRS = Water Table depth below ground surface recorded at noted time after completion of bore hole.
ETR = = Energy Transfer Ratio determined according to ASTM D4633

CORRELATION OF PENETRATION RESISTANCE AND SOIL PROPERTIES

SOIL		DESIGNATION	"N" (blows per ft.)
SAND AND SILT	RELATIVE DENSITY	VERY LOOSE	LESS THAN 4
		LOOSE	4 - 10
		MEDIUM DENSE	10 - 30
		DENSE	30 - 50
		VERY DENSE	OVER 50
CLAY	CONSISTENCY	VERY SOFT	LESS THAN 2
		SOFT	2 - 4
		MEDIUM STIFF	4 - 8
		STIFF	8 - 15
		VERY STIFF	15 - 30
		HARD	OVER 30

STATE OF LOUISIANA
LARRY DEAN SANT
License No. 35625
PROFESSIONAL ENGINEER
IN
CIVIL ENGINEERING
05-16-2014

THIS SIGNATURE AND SEAL IS AFFIXED TO THIS DRAWING AS CERTIFICATION THAT THE LABORATORY TESTING AND ANALYSIS WAS PERFORMED ACCORDING TO THE LISTED PROCEDURES. NO DESIGN COMPUTATIONS WERE PERFORMED OR REVIEWED BY ME.

SHEET 553

PARISH: EAST BATON ROUGE
CITY: BATON ROUGE
PROJECT: 12-CS-HC-0043

DESIGNED:
CHECKED:
DETAILED: CMC 10/11/2013
CHECKED: JMA
DATE: 3/20/2014
SHEET: 1 OF 1

NO. DATE BY REVISION DESCRIPTION

CITY OF BATON ROUGE • PARISH OF EAST BATON ROUGE • DEPARTMENT OF PUBLIC WORKS

Mall of Louisiana Boulevard

LOGS OF SOIL BORINGS

Field Book No.

PUBLIC WORKS

GeoEngineers

3/20/14 10:43

Report Form: LADOTD - ENGLISH Project File: P:\161671005 1\00\GINT\CITY PARISH - PICARDY-PERKINS - HIGHLAND-BURBANK BORING LOGS.GPJ

BORING NO. 11

DEPTH (Feet)	GRAPHIC	SOIL TYPE AND COLOR	WET DENSITY	MOISTURE CONTENT	LIQUID LIMIT	PLASTICITY INDEX	% PASSING #200	SPT or UU	FAILURE MODE/ SPT TERMINATION	SAMPLE TYPE NUMBER	ELEVATION
0		Stiff, tan and gray, CLAY, (CH)								1	19.1
		Stiff, gray, CLAY, (CH)								2	
		Stiff, tan and light gray, CLAY, (CL) with silt, ferrous nodules and calcareous nodules	127	27	42	20		1.09	M.S.	3	
		Medium stiff, tan and light gray, CLAY, (CL)								4	
10		Stiff, tan and light gray, Silty CLAY, (CL) with ferrous streaks and calcareous nodules	124	23	39	23		1.28	M.S.	5	9.1
		Stiff, tan and light gray, CLAY, (CL) with calcareous nodules								6	
20		Stiff, tan and light gray, CLAY, (CL) with silt and calcareous nodules	129	25	43	24		1.25	YLD.	7	-0.9
		Medium stiff, tan and light gray, Clayey ELASTIC SILT, (CL-ML) with sand	126	25	27	7	88.0	0.83	M.S.	8	
30		Stiff, light gray, CLAY, (CH) with fine sand								9	-10.9
		Very stiff, gray, CLAY, (CL) with sand	130	23			85.0	2.30	YLD.	10	
40		Very stiff, tan and gray, CLAY, (CH)								11	-20.9
		Very stiff, tan and gray, CLAY, (CH)	128	28	72	55		1.81 2.01	SLS (60°)	12	
50		Very stiff, tan and light gray, CLAY, (CH)								13	-30.9
		Very stiff, tan and light gray, CLAY, (CH)	127	24				2.60	M.S.	14	
60		Very stiff, tan and light gray, CLAY, (CH)								15	-40.9
		Very stiff, tan and light gray, CLAY, (CH) with ferrous nodules and calcareous nodules	118	37	70	46		1.26 2.19	SLS (40°)	16	
70		Very stiff, tan and light gray, CLAY, (CH) Gravel layer								17	-50.9
		Stiff, tan and light gray, CLAY, (CH) with shell fragments and gravel	126	28				1.28	YLD.	18	
80		Very stiff, tan and light gray, CLAY, (CH)								19	-60.9
		Very stiff, tan and light gray, CLAY, (CH)								20	
90		Stiff, tan, CLAY, (CH)	125	35				1.98	M.S.	21	-70.9
		Very stiff, tan, CLAY, (CH)								22	
100		Dense, tan, Silty SAND, (SM) with clay	132	24	22	5	68.0	0.49	M.S.	23	-80.9
		Very dense, tan and light gray, SAND, (SP) with trace clay						27-49-50 (99)		24	
110		Very dense, tan and light gray, Silty SAND, (SM)					44.0	19-23-25 (48)		25	-90.9
		Dense, tan, SAND, (SP) with trace clay						15-17-17 (34)		26	
120		Dense, tan, SAND, (SP) with clay						18-19-27 (46)		27	-100.9
		Bottom of hole at 120 feet Backfilled with grout upon completion.									
130											-110.9
140											-120.9

DRILL RIG AND EQUIPMENT
DRILL RIG MODEL: Failing 1500
DRILLING METHOD: Wet Rotary
HOLE DIAMETER: 4"
SPT HAMMER / ETR: Safety Hammer/Cathead

BORING NO. 11	STA.:
LATITUDE: 30.38106	OFFSET:
LONGITUDE: -91.08736	DATE TAKEN: 9/17/2013
LRS ID:	STR. NO.:
WATER LEVEL:	
BACKFILL METHOD: Grout	
SQD. LDR.:	

BORING NO. 12

DEPTH (Feet)	GRAPHIC	SOIL TYPE AND COLOR	WET DENSITY	MOISTURE CONTENT	LIQUID LIMIT	PLASTICITY INDEX	% PASSING #200	SPT or UU	FAILURE MODE/ SPT TERMINATION	SAMPLE TYPE NUMBER	ELEVATION
0		6" water at surface								1	3.7
		Medium stiff, gray, Sandy CLAY, (CL)	139	24	28	9		0.71	M.S.	2	
		Medium stiff, gray, Very Silty CLAY, (CL)								3	
		Stiff, gray, Silty CLAY, (CL)	133	23	26	14		1.21@2.78	M.S.	4	
10		Stiff, gray, Very Silty CLAY, (CL)								5	-6.3
		Stiff, gray, CLAY, (CL) with silt								6	
		Very stiff, gray, Silty CLAY, (CL)	134	21	35	20		2.33	YLD.	7	-16.3
20		Stiff, gray, CLAY, (CL)								8	
		Stiff, gray, CLAY, (CH)	121	41	89	61		0.75 1.44 REMOLD	SLS (60°)	9	-26.3
30		Stiff, tan and gray, CLAY, (CH)								10	
		Stiff, tan and gray, CLAY, (CH)	125	25	60	42		1.68@13.61	Bulge	11	-36.3
40		Stiff, tan and gray, CLAY, (CH)								12	
		Very stiff, tan and gray, CLAY, (CL) with silt	132	20	46	33		2.22	YLD.	13	-46.3
50		Stiff, tan, CLAY, (CL) with silt								14	
		Medium stiff, tan, Silty CLAY, (CL)	126	29	41	22		0.52	YLD.	15	-56.3
60		Very stiff, gray, CLAY, (CH) with 2" sandy clay layer								16	
		Medium stiff, tan, Clayey ELASTIC SILT, (CL-ML)	124	27	23	5		0.47@25.63	YLD.	17	-66.3
70		Medium stiff, tan, Silty CLAY, (CL)								18	
		Medium stiff, tan and gray, CLAY, (CL) with silt	129	24				0.69	M.S.	19	-76.3
80		Very stiff, tan and gray, CLAY, (CL) with silt								20	
		Stiff, gray, Silty CLAY, (CL)	129	25	40	26		1.36	YLD.	21	-86.3
90		Stiff, gray, CLAY, (CH) with trace silt								22	
		Medium stiff, tan and gray, CLAY, (CH) with shell fragments	121	34				0.98	YLD.	23	-96.3
100		Very stiff, tan and gray, CLAY, (CH)								24	
		Hard, tan and gray, CLAY, (CH)								25	-106.3
110		Very stiff, tan and gray, CLAY, (CH)	128	22				2.15	YLD.	26	
		Stiff, tan and gray, CLAY, (CL) with silt and silt lenses								27	-116.3
120		Very stiff, tan and gray, CLAY, (CL) with silt	129	24				2.13	YLD.		
		Bottom of hole at 120 feet Backfilled with grout upon completion.									
130											-126.3
140											-136.3

DRILL RIG AND EQUIPMENT
DRILL RIG MODEL: Marsh Buggy Mounted
DRILLING METHOD: Wet Rotary
HOLE DIAMETER: 4"
SPT HAMMER / ETR: Hydraulic Hammer

BORING NO. 12	STA.:
LATITUDE: 30.38133	OFFSET:
LONGITUDE: -91.42342	DATE TAKEN: 1/8/2014
LRS ID:	STR. NO.:
WATER LEVEL:	
BACKFILL METHOD: Grout	
SQD. LDR.:	

BORING NO. 13

DEPTH (Feet)	GRAPHIC	SOIL TYPE AND COLOR	WET DENSITY	MOISTURE CONTENT	LIQUID LIMIT	PLASTICITY INDEX	% PASSING #200	SPT or UU	FAILURE MODE/ SPT TERMINATION	SAMPLE TYPE NUMBER	ELEVATION
0		Stiff, brown, CLAY, (CH) with roots								1	19.8
		Medium stiff, tan and gray, Very Silty CLAY, (CL)	121	23				0.55	M.S.	2	
		Medium stiff, light gray, CLAY, (CL) with silt and ferrous nodules	134	28	44	25		0.91	YLD.	3	
		Medium stiff, light gray, Silty CLAY, (CL) with ferrous nodules	126	28				0.84	YLD.	4	
10		Medium stiff, tan and gray, CLAY, (CL) with silt	126	27				0.84	YLD.	5	9.8
		Stiff, tan and gray, CLAY, (CL) with silt	135	25				1.62	YLD.	6	
20		Stiff, tan and gray, CLAY, (CH) with calcareous nodules	123	24				1.53	YLD.	7	-0.2
		Medium stiff, gray, Clayey ELASTIC SILT, (CL-ML)	134	36	21	6		2.55@9.58	YLD.	8	
30		Stiff, tan and gray, CLAY, (CL) with silt and silt streaks								9	-10.2
		Stiff, tan and gray, CLAY, (CL) with silt	131	25				1.33	YLD.	10	
40		Stiff, tan and gray, CLAY, (CH)								11	-20.2
		Stiff, tan and gray, CLAY, (CH)	131	34				1.62 1.61 REMOLD	SLS (60°)	12	
50		Very stiff, tan and gray, CLAY, (CH)								13	-30.2
		Very stiff, tan and gray, CLAY, (CH) with ferrous nodules	125	24				2.67	Bulge	14	
60		Very stiff, tan and gray, CLAY, (CH)								15	-40.2
		Stiff, tan and gray, CLAY, (CH)	126	36				1.18 1.57 REMOLD	SLS (60°)	16	
70		Very stiff, tan and gray, CLAY, (CH)								17	-50.2
		Stiff, tan and gray, CLAY, (CH)	124	35				0.76 1.77 REMOLD	SLS (45°)	18	
80		Very stiff, tan and gray, CLAY, (CH)								19	-60.2
		Very stiff, tan and gray, CLAY, (CH)	126	24				2.77	M.S.	20	
90		Very stiff, tan and gray, CLAY, (CH)								21	-70.2
		Very stiff, tan and gray, CLAY, (CH)								22	
100		Soft, tan and gray, Very Silty CLAY, (CL) with sand	124	24				0.18@39.58	YLD.	23	-80.2
		Medium dense, tan and gray, Clayey SAND, (SC)	125	22				1.87@41.60	YLD.	24	
110		Medium dense, tan, Clayey SAND, (SC)								25	-90.2
		Stiff, tan and gray, CLAY, (CL)	125	36				1.93	SLS (60°)	26	
120		Very stiff, tan and gray, CLAY, (CL)								27	-100.2
		Bottom of hole at 120 feet Backfilled with grout upon completion.									
130											-110.2
140											-120.2

DRILL RIG AND EQUIPMENT
DRILL RIG MODEL: ARDCO ATV
DRILLING METHOD: Dry 0' - 6' / Wet >6'
HOLE DIAMETER: 4"
SPT HAMMER / ETR: Safety Hammer/Cathead

BORING NO. 13	STA.:
LATITUDE: 30.38203	OFFSET:
LONGITUDE: -91.09017	DATE TAKEN: 1/17/2014
LRS ID:	STR. NO.:
WATER LEVEL: 6' ATD	
BACKFILL METHOD: Grout	
SQD. LDR.:	

STANDARD ABBREVIATIONS & DEFINITIONS

CH, CL, CL-ML, SM, SP

N.P. = Non-Plastic
ORG. = Organic

FAILURE MODE:
M.S. = Multiple Shear SL. = Slump
S/S = Slickensides YLD. = Yield
V.S. = Vertical Shear 60 S. = Shear Angle

SPT TERMINATION, AASHTO T 206
1 = 7.2.1 - 50 Blows Within A 6" Interval
2 = 7.2.2 - 100 Blows Total
3 = 7.2.3 - No Advancement for 10 Blows
4 = 7.2.4 - Sampler Driven the Entire 18"
5 = Non-standard

SOIL PROPERTIES

⊗	= SOIL TYPE nomenclature is based on ASTM D 2487
WET DENSITY	= Wet density of in-place soil, (pounds per cu. ft.) determined by AASHTO T 208.
MOISTURE CONTENT	= Moisture Content of in-place soil, expressed as a percentage of the dry weight of the soil, (%), determined by DOTD TR 403, Method B.
LIQUID LIMIT & PLASTICITY INDEX	= Atterberg limits and indices, DOTD TR 428
SPT	= Standard Penetration Test, AASHTO T 206, number of blows per each 6 inch increment, unless amount of penetration is shown
UU	= Unconsolidated Undrained triaxial test, AASHTO T 296, compressive strength (tons per sq. ft.), of one specimen confined at noted pressure (pounds per sq. in.)
C	= Soil cohesion (tons per sq. ft.)
ϕ	= Soil angle of internal friction (degrees)
Δ	= Unconsolidated Undrained triaxial test, AASHTO T 296, three specimens, (c - ϕ).
+	= Consolidated drained direct shear test, AASHTO T 236, (c - ϕ).
*	= Hydrometer test performed

MISCELLANEOUS:

C-3 = Location and Identification of thin-walled tube sample, AASHTO T 207
C-3 = Location and Identification of thin-walled tube sample, AASHTO T 207, with a portion of the sample saved for consolidation testing
D-3 = Location and Identification of SPT sample, AASHTO T 206
NO RECV. = No Recovery, unable to recover sample for testing or classification.
DIST. = Disturbed sample recovered with thin-walled tube sampler.
24 HRS = Water Table depth below ground surface recorded at noted time after completion of bore hole.
ETR = = Energy Transfer Ratio determined according to ASTM D4633

CORRELATION OF PENETRATION RESISTANCE AND SOIL PROPERTIES

SOIL		DESIGNATION	"N" (blows per ft.)
SAND AND SILT	RELATIVE DENSITY	VERY LOOSE	LESS THAN 4
		LOOSE	4 - 10
		MEDIUM DENSE	10 - 30
		DENSE	30 - 50
		VERY DENSE	OVER 50
CLAY	CONSISTENCY	VERY SOFT	LESS THAN 2
		SOFT	2 - 4
		MEDIUM STIFF	4 - 8
		STIFF	8 - 15
		VERY STIFF	15 - 30
		HARD	OVER 30

STATE OF LOUISIANA
LARRY DEAN SANT
License No. 35625
PROFESSIONAL ENGINEER
IN
CIVIL ENGINEERING
05-16-2014

THIS SIGNATURE AND SEAL IS AFFIXED TO THIS DRAWING AS CERTIFICATION THAT THE LABORATORY TESTING AND ANALYSIS WAS PERFORMED ACCORDING TO THE LISTED PROCEDURES. NO DESIGN COMPUTATIONS WERE PERFORMED OR REVIEWED BY ME.

SHEET 554

PARISH: EAST BATON ROUGE
CITY: BATON ROUGE
PROJECT: 12-CS-HC-0043

DESIGNED:
CHECKED:
DETAILED: CMC 10/11/2013
CHECKED: JMK
DATE: 3/20/2014
SHEET: 1 OF 1

REVISION DESCRIPTION: NO. | DATE | BY

CITY OF BATON ROUGE • PARISH OF EAST BATON ROUGE

Mall of Louisiana Boulevard

LOGS OF SOIL BORINGS

Field Book No.

DEPARTMENT OF PUBLIC WORKS

GeoEngineers

3/20/14 10:44

Report Form: LADOTD - ENGLISH Project File: P:\16\16710051\00\GINT\CITY PARISH - PICARDY-PERKINS - HIGHLAND-BURBANK BORING LOGS.GPJ

BORING NO. 14

DEPTH (Feet)	SOIL TYPE AND COLOR	WET DENSITY	MOISTURE CONTENT	LIQUID LIMIT	PLASTICITY INDEX	% PASSING #200	SPT or UU	FAILURE MODE/ SPT TERMINATION	SAMPLE TYPE NUMBER	ELEVATION
0	Stiff, brown, CLAY, (CH) with roots								1	19.1
	Stiff, gray, CLAY, (CH)	121	24	52	36		1.15	YLD.	2	
10	Soft, tan and gray, CLAY, (CL) with silt and silt streaks	132	29	43	26		0.26@3.61	YLD.	3	9.1
	Stiff, tan and gray, CLAY, (CH) with silt pockets and ferrous nodules	128	25				1.64	YLD.	4	
20	Stiff, tan and gray, CLAY, (CH) with silt streaks								5	-0.9
	Very stiff, gray, Very Silty CLAY, (CL) with silt streaks	131	20	32	19		2.61	M.S.	6	
30	Stiff, gray, CLAY, (CL) with silt and silt pockets								7	-10.9
	Stiff, tan and gray, CLAY, (CH)	119	36				1.98	M.S.	8	
40	Very stiff, tan and gray, CLAY, (CH)								9	-20.9
	Very stiff, tan and gray, CLAY, (CH)	124	31	64	49		2.74	M.S.	10	
50	Very stiff, tan and gray, CLAY, (CH)								11	-30.9
	Stiff, tan and gray, CLAY, (CH) with calcareous nodules	120	25				1.55	SLS (50°)	12	
60	Very stiff, tan and gray, CLAY, (CH) with calcareous nodules	116	30	80	56		2.28	M.S.	13	-40.9
	Bottom of hole at 60 feet Backfilled with grout upon completion.									
70										-50.9
80										-60.9
90										-70.9
100										-80.9
110										-90.9
120										-100.9
130										-110.9
140										-120.9

DRILL RIG AND EQUIPMENT
DRILL RIG MODEL: ARDCO ATV
DRILLING METHOD: Wet Rotary
HOLE DIAMETER: 4"
SPT HAMMER / ETR: Safety Hammer/Cathead

BORING NO. 14	STA.:	WATER LEVEL:
LATITUDE: 30.38481	OFFSET:	
LONGITUDE: -91.08814	DATE TAKEN: 1/11/2014	BACKFILL METHOD: Grout
LRS ID:	STR. NO.:	SQD. LDR.:

BORING NO. 15

DEPTH (Feet)	SOIL TYPE AND COLOR	WET DENSITY	MOISTURE CONTENT	LIQUID LIMIT	PLASTICITY INDEX	% PASSING #200	SPT or UU	FAILURE MODE/ SPT TERMINATION	SAMPLE TYPE NUMBER	ELEVATION
0	Medium stiff, brown, CLAY, (CL) with silt and roots	119	37	47	28		0.91	YLD.	1	18.3
	Stiff, tan and gray, CLAY, (CL) with silt and ferrous nodules	125	26				1.07	YLD.	2	
10	Medium stiff, tan and gray, CLAY, (CL) with silt and silt streaks and ferrous nodules	127	26				0.98@3.61	Bulge	3	8.3
	Stiff, tan and gray, CLAY, (CH) with silt streaks	120	25				1.26	M.S.	4	
20	Stiff, tan and gray, CLAY, (CL) with silt and fererous nodules	129	24	45	29		1.22	YLD.	5	-1.7
	Stiff, tan and gray, CLAY, (CL) with trace silt								6	
30	Stiff, tan and gray, Very Silty CLAY, (CL)	130	23	30	17		1.16	YLD.	7	-11.7
	Stiff, tan and gray, CLAY, (CH)								8	
40	Stiff, tan and gray, CLAY, (CH) with silt streaks	123	28				1.27	M.S.	9	-21.7
	Very stiff, tan and gray, CLAY, (CH)								10	
50	Stiff, tan and gray, CLAY, (CH)	119	35				1.50	M.S.	11	-31.7
	Very stiff, tan and gray, CLAY, (CH)								12	
60	Very stiff, tan and gray, CLAY, (CH)	123	24				2.28	YLD.	13	-41.7
	Bottom of hole at 60 feet Backfilled with grout upon completion.									
70										-51.7
80										-61.7
90										-71.7
100										-81.7
110										-91.7
120										-101.7
130										-111.7
140										-121.7

DRILL RIG AND EQUIPMENT
DRILL RIG MODEL: ARDCO ATV
DRILLING METHOD: Dry 0' - 10' / Wet >10'
HOLE DIAMETER: 4"
SPT HAMMER / ETR: Safety Hammer/Cathead

BORING NO. 15	STA.:	WATER LEVEL: 10' ATD
LATITUDE: 30.38464	OFFSET:	
LONGITUDE: -91.08783	DATE TAKEN: 1/11/2014	BACKFILL METHOD: Grout
LRS ID:	STR. NO.:	SQD. LDR.:

BORING NO. 16

DEPTH (Feet)	SOIL TYPE AND COLOR	WET DENSITY	MOISTURE CONTENT	LIQUID LIMIT	PLASTICITY INDEX	% PASSING #200	SPT or ULI	FAILURE MODE/ SPT TERMINATION	SAMPLE TYPE NUMBER	ELEVATION
0	Stiff, brown, CLAY, (CH) with roots								1	19.9
	Stiff, tan and gray, (CH)		21	50	33				2	
10	Medium stiff, tan and gray, Silty CLAY, (CL) with ferrous nodules	122	24	40	23		0.98@3.61	Bulge	3	9.9
	Stiff, tan and gray, CLAY, (CH)	127	25				1.26	M.S.	4	
20	Very stiff, tan and gray, CLAY, (CH)	129	21	58	40		2.50	YLD.	5	-0.1
	Very stiff, tan and gray, CLAY, (CH)								6	
30	Stiff, tan and gray, CLAY, (CH)	124	31	55	35		1.68	M.S.	7	-10.1
	Very stiff, tan and gray, CLAY, (CH)								8	
40	Stiff, tan and gray, CLAY, (CH)	122	34				1.46 1.41 REMOLD	SLS (45°)	9	-20.1
	Very stiff, tan and gray, CLAY, (CH)								10	
50	Very stiff, tan and gray, CLAY, (CH)	122	28	69	46		2.25	M.S.	11	-30.1
	Very stiff, tan and gray, CLAY, (CH)								12	
60	Stiff, tan and gray, CLAY, (CH)	127	27				2.05	M.S.	13	-40.1
	Bottom of hole at 60 feet Backfilled with grout upon completion.									
70										-50.1
80										-60.1
90										-70.1
100										-80.1
110										-90.1
120										-100.1
130										-110.1
140										-120.1

DRILL RIG AND EQUIPMENT
DRILL RIG MODEL: ARDCO ATV
DRILLING METHOD: Dry 0' - 20' / Wet >20'
HOLE DIAMETER: 4"
SPT HAMMER / ETR: Safety Hammer/Cathead

BORING NO. 16	STA.:	WATER LEVEL:
LATITUDE: 30.38508	OFFSET:	
LONGITUDE: -91.08789	DATE TAKEN: 1/12/2014	BACKFILL METHOD: Grout
LRS ID:	STR. NO.:	SQD. LDR.:

STANDARD ABBREVIATIONS & DEFINITIONS

CH = Clay, high plasticity; CL = Clay, low plasticity

N.P. = Non-Plastic
ORG. = Organic

FAILURE MODE:
M.S. = Multiple Shear SL. = Slump
S/S = Slickensides YLD. = Yield
V.S. = Vertical Shear 60 S. = Shear Angle

SPT TERMINATION, AASHTO T 206
1 = 7.2.1 - 50 Blows Within A 6" Interval
2 = 7.2.2 - 100 Blows Total
3 = 7.2.3 - No Advancement for 10 Blows
4 = 7.2.4 - Sampler Driven the Entire 18"
5 = Non-standard

SOIL PROPERTIES

⊗ = SOIL TYPE nomenclature is based on ASTM D 2487
WET DENSITY = Wet density of in-place soil, (pounds per cu. ft.) determined by AASHTO T 208.
MOISTURE CONTENT = Moisture Content of in-place soil, expressed as a percentage of the dry weight of the soil, (%), determined by DOTD TR 403, Method B.
LIQUID LIMIT & PLASTICITY INDEX = Atterberg limits and indices, DOTD TR 428
SPT = Standard Penetration Test, AASHTO T 206, number of blows per each 6 inch increment, unless amount of penetration is shown
UU = Unconsolidated Undrained triaxial test, AASHTO T 296, compressive strength (tons per sq. ft.), of one specimen confined at noted pressure (pounds per sq. in.)
C = Soil cohesion (tons per sq. ft.)
ϕ = Soil angle of internal friction (degrees)
△ = Unconsolidated Undrained triaxial test, AASHTO T 296, three specimens, (c - ϕ).
+ = Consolidated drained direct shear test, AASHTO T 236, (c - ϕ).
• = Hydrometer test performed

MISCELLANEOUS:

C-3 = Location and Identification of thin-walled tube sample, AASHTO T 207
C-4 = Location and Identification of thin-walled tube sample, AASHTO T 207, with a portion of the sample saved for consolidation testing
D-3 = Location and Identification of SPT sample, AASHTO T 206
NO RECV. = No Recovery, unable to recover sample for testing or classification.
DIST. = Disturbed sample recovered with thin-walled tube sampler.
▽ 24 HRS = Water Table depth below ground surface recorded at noted time after completion of bore hole.
ETR = Energy Transfer Ratio determined according to ASTM D4633

CORRELATION OF PENETRATION RESISTANCE AND SOIL PROPERTIES

SOIL		DESIGNATION	"N" (blows per ft.)
SAND AND SILT	RELATIVE DENSITY	VERY LOOSE	LESS THAN 4
		LOOSE	4 - 10
		MEDIUM DENSE	10 - 30
		DENSE	30 - 50
		VERY DENSE	OVER 50
CLAY	CONSISTENCY	VERY SOFT	LESS THAN 2
		SOFT	2 - 4
		MEDIUM STIFF	4 - 8
		STIFF	8 - 15
		VERY STIFF	15 - 30
		HARD	OVER 30

STATE OF LOUISIANA
LARRY DEAN SANT
License No. 35625
PROFESSIONAL ENGINEER
IN
CIVIL ENGINEERING
05-16-2014

THIS SIGNATURE AND SEAL IS AFFIXED TO THIS DRAWING AS CERTIFICATION THAT THE LABORATORY TESTING AND ANALYSIS WAS PERFORMED ACCORDING TO THE LISTED PROCEDURES. NO DESIGN COMPUTATIONS WERE PERFORMED OR REVIEWED BY ME.

SHEET 555

PARISH: EAST BATON ROUGE
CITY: BATON ROUGE
PROJECT: 12-CS-HC-0043

DESIGNED:
CHECKED:
DETAILED: CMC 10/11/2013
CHECKED: JMA
DATE: 3/20/2014
SHEET: 1 OF 1

NO. | DATE | REVISION DESCRIPTION | BY

CITY OF BATON ROUGE • PARISH OF EAST BATON ROUGE

Mall of Louisiana Boulevard

LOGS OF SOIL BORINGS

Field Book No.

PUBLIC WORKS

GeoEngineers

PROJECT NO.	SHEET
12-CS-HC-0043	600

TABLE 1
(ALL DIMENSIONS ARE IN INCHES)

PAVEMENT THICKNESS "T"	DOWEL BARS ⊗			MINIMUM DEPTH OF JOINT	
	SIZE	LENGTH	SPACING	■ C.J. & D.J.	◪ L.J.
6	1	18	12	2	2
8	1 1/4	18	12	3	3
9	1 1/4	18	12	3	3 1/2
10	1 1/4	18	12	3 1/2	4

NOTES:

1. ALL JOINTS 10' MIN. SPACING 20' MAX. SPACING
2. MAXIMUM SPACING ON EJ OR EJ–1 WILL NOT EXCEED 500 FEET

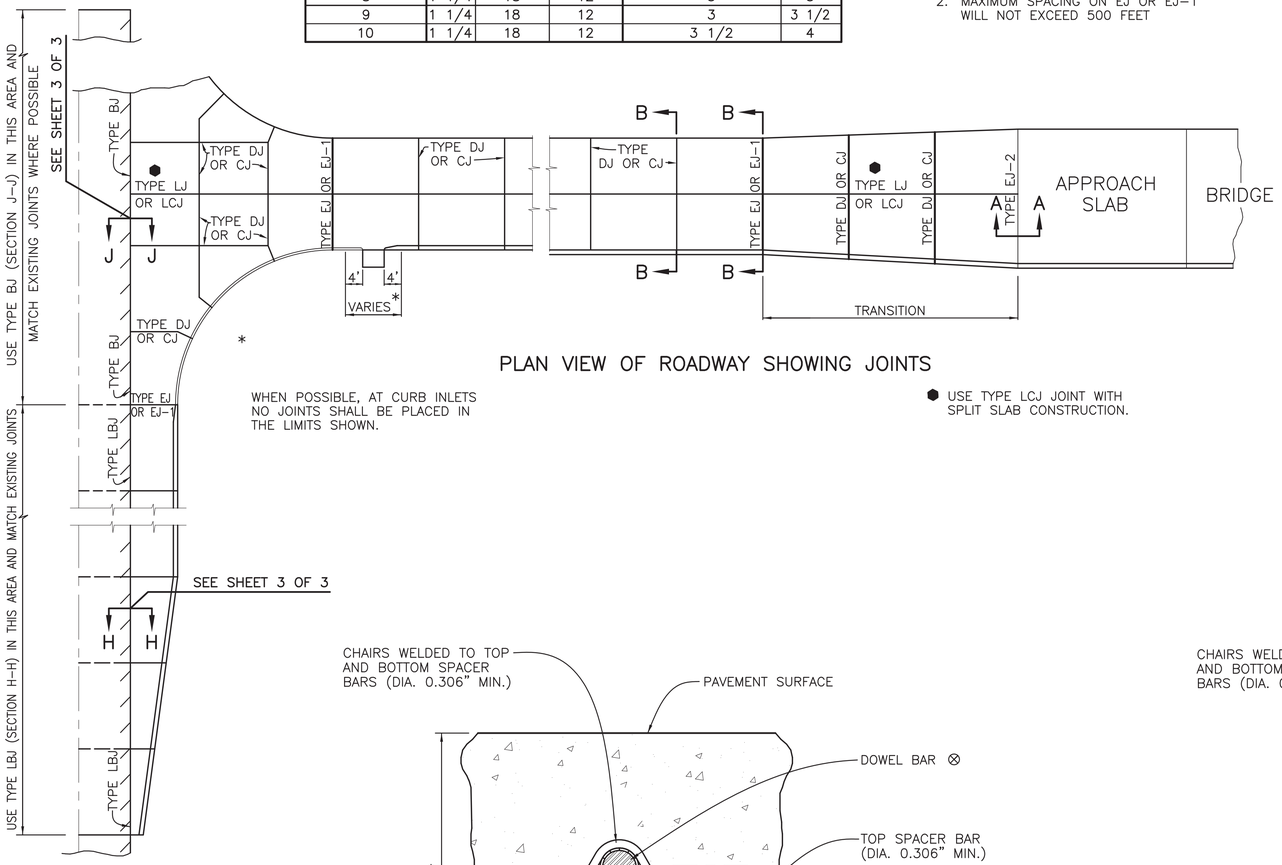

PLAN VIEW OF ROADWAY SHOWING JOINTS

WHEN POSSIBLE, AT CURB INLETS NO JOINTS SHALL BE PLACED IN THE LIMITS SHOWN.

⬢ USE TYPE LCJ JOINT WITH SPLIT SLAB CONSTRUCTION.

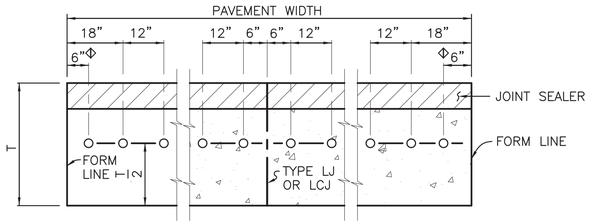

SECTION B–B

DOWEL BAR SPACING FOR TYPE DJ,CJ AND EJ JOINTS

◈ 9"–WHEN MECHANICAL PLACEMENT OF DOWEL BARS IS USED.

GENERAL NOTES

1. OUTSIDE PAVEMENT EDGES SHALL BE ROUNDED 1/4".
2. ON TYPE EJ JOINTS, EXPANSION TUBES AND STOPS SHALL BE PLACED ON ALTERNATE ENDS OF EACH DOWEL BARS. BARS SHALL BE SPOT WELDED ON ALTERNATE ENDS TO DOWEL BASKETS.
3. TYPE LJ JOINTS SHALL BE SAWED 1/8" WIDE AS SHOWN IN DETAIL "D" ON SHEET 2 TO THE DEPTH SHOWN IN TABLE 1. THEY SHALL BE CLEANED AND SEALED WITH A JOINT SEALER CONFORMING TO SUBSECTION 1007–2.
4. TYPE DJ AND CJ JOINTS SHALL BE TO THE DEPTH SHOWN IN TABLE 1. IF SAWED, THEY SHALL HAVE AN INITIAL CUT USING A 1/8" BLADE. OTHERWISE, JOINTS SHALL CONFORM TO DETAILS "B" AND "C" ON SHEET 2. THEY SHALL ALSO BE SAND BLASTED AND CLEANED PRIOR TO SEALING USING A JOINT SEALER CONFORMING TO SUBSECTION 1007–2.
5. TYPE DJ JOINTS MAY ALSO BE A COMBINATION JOINT FORMER/ SEALER AS SHOWN IN DETAIL "A" ON SHEET 2 CONFORMING TO SUBSECTION 1007–4.
6. TYPE EJ JOINTS SHALL BE FORMED FULL DEPTH, USING A WOOD FILLER, EXCEPT FOR THE TOP 1/2" WHICH SHALL BE A JOINT SEALER CONFORMING TO SUBSECTION 1007–2. THE WOOD FILLER SHALL CONFORM TO SUBSECTION 1007–1(b).
7. IN LIEU OF DOWEL BASKET, APPROVED VIBRATORY PLACEMENT OF DOWEL BARS AND TIE BARS WILL BE PERMITTED. DOWEL BASKETS SHALL BE SIMILAR TO ONES SHOWN, OR APPROVED EQUALS.
8. INSTALL GEOTEXTILE FABRIC UNDER CJ, DJ AND EJ TYPE JOINTS WHEN CONCRETE IS PLACED ON UNSTABILIZED OR UN–TREATED BASE COURSE WHEN DOWEL BARS ARE VIBRATED IN PLACE, THE GEOTEXTILE FABRIC SHALL BE ANCHORED TO BASE COURSE WITH PINS.
9. TRANSVERSE EXPANSION JOINTS SHALL NOT BE USED FOR CONSTRUCTION JOINTS.
10. TIE BARS SHALL NOT BE PLACED WITHIN 18" OF CONTRACTION (DUMMY) OR EXPANSION JOINTS.
11. TRANSVERSE EXPANSION JOINTS (TYPE EJ OR EJ–1) SHALL BE PLACED AT MAXIMUM 500–FOOT INTERVALS IN ADDITION TO BEING PLACED AT JUNCTIONS WITH OTHER CONCRETE PAVEMENTS.

SECTION C–C

⊗ SEE TABLE 1

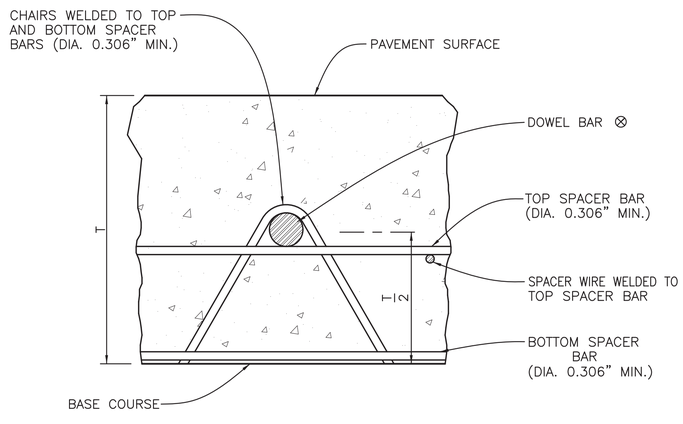

SECTION D–D

⊗ SEE TABLE 1



STANDARD PLAN NO.	DATED	SHEET NO.
502–01	January 18, 2008	1 OF 3

CONCRETE PAVEMENT

DETAILS

DATE	DESCRIPTION REVISIONS	BY

ENGINEERING DIVISION
DEPARTMENT OF PUBLIC WORKS
CITY OF BATON ROUGE & PARISH OF EAST BATON ROUGE

DESIGNED	DRAWN	CHECKED	APPROVED
R.E.E./N.A.R.	G. VANNICE	N.A.R./R.E.E.	T. STEPHENS

PROJECT NO.	SHEET
12-CS-HC-0043	601

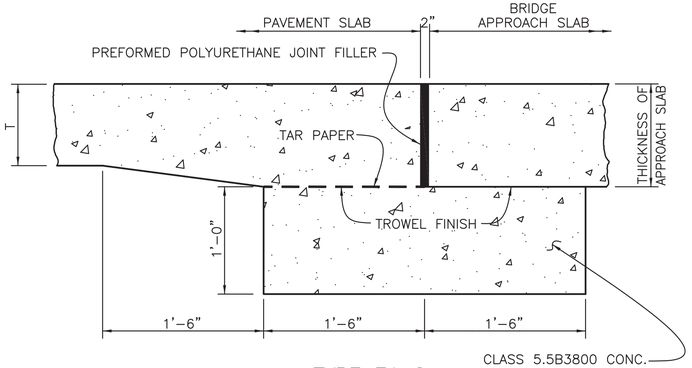

TYPE EJ-2
(TRANSVERSE EXPANSION JOINT)
SECTION A-A

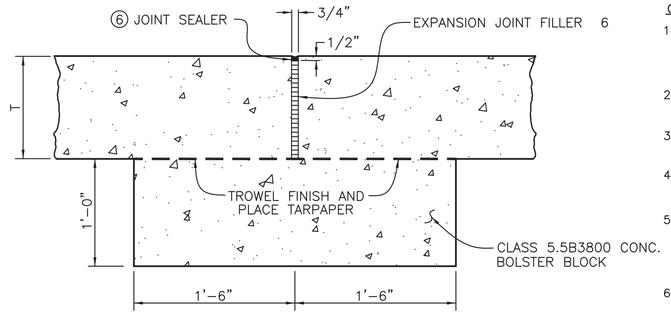

TYPE EJ-1
(TRANSVERSE EXPANSION JOINT)

COMBINATION JOINT FORMER / SEALER NOTES:

1. AFTER PAVEMENT HAS BEEN FINISHED AND WHILE CONCRETE IS STILL PLASTIC, GROOVES SHALL BE CUT INTO PAVEMENT AT PROPER LOCATION AND DEPTH. INSTALL SEALINSERT FLUSH WITH FINISHED SURFACE.
2. IMMEDIATELY CONSOLIDATE CONCRETE ON BOTH SIDES OF SEALINSERT WITH AN APPROVED MECHANICAL VIBRATOR.
3. AFTER FINAL FINISH BUT BEFORE CONCRETE HAS TAKEN ITS INITIAL SET, JOINT EDGES SHALL BE ROUNDED TO RADIUS SHOWN.
4. TOP CAP SHALL REMAIN IN PLACE UNTIL FINAL CLEAN-UP HAS BEEN COMPLETED.
5. SEALINSERTS SHALL BE CUT AND INSTALLED TO BE CONTINUOUS ACROSS THE FULL WIDTH OF SLAB, UNLESS FIELD SPLICING IS APPROVED BY THE ENGINEER. FIELD SPLICES SHALL BE SEALED WITH A POURED OR EXTRUDED JOINT SEALANT CONFORMING TO SUBSECTION 1007-2.
6. AT THE INTERSECTION OF TYPE LJ AND DJ JOINTS USING A COMBINATION JOINT FORMER / SEALER OR SPLIT SLAB CONSTRUCTION, THE GAP SHALL BE FILLED WITH A POURED OR EXTRUDED JOINT SEALANT CONFORMING TO SUBSECTION 1007-2.

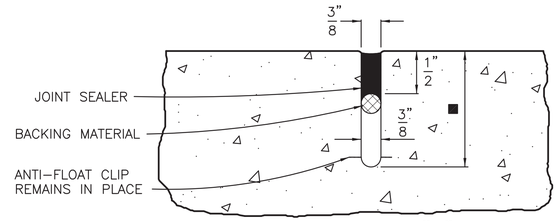

DETAIL "B"
POURED JOINT (FORMED) TYPE DJ OR CJ
■ SEE TABLE 1 ON SHEET 1

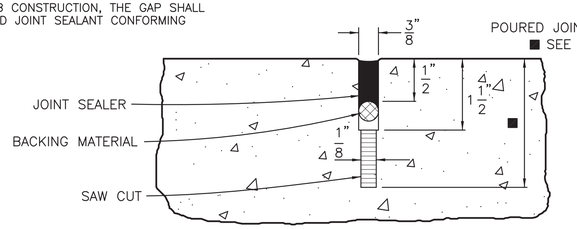

DETAIL "C"
POURED JOINT (SAWED) TYPE DJ OR CJ
■ SEE TABLE 1 ON SHEET 1

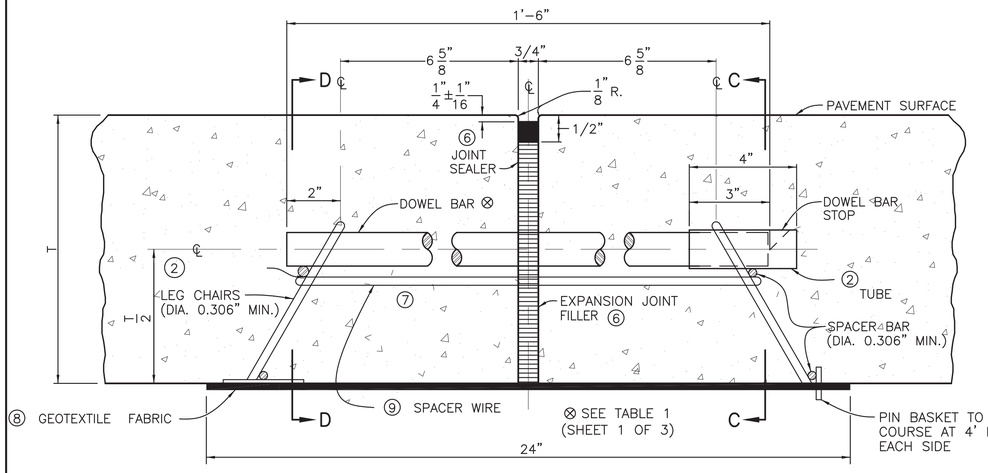

TYPE EJ
(TRANSVERSE EXPANSION JOINT)
AT CONTRACTOR'S OPTION, TYPE EJ-1 JOINT MAY BE USED IN LIEU OF TYPE EJ JOINT.

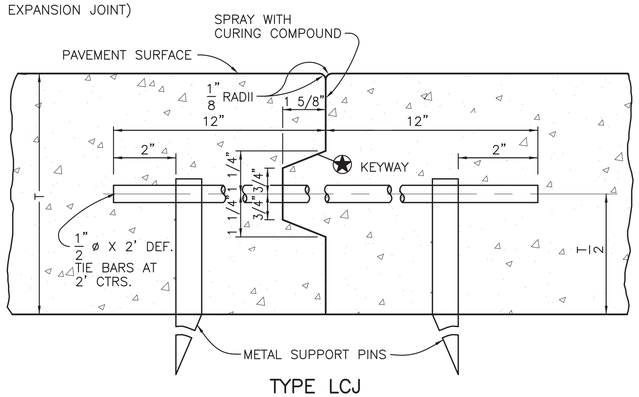

TYPE LCJ
(LONGITUDINAL CONSTRUCTION JOINT)
(SPLIT SLAB CONSTRUCTION)

★ IN LIEU OF KEYWAY, ONE OF THE FOLLOWING OPTIONS WILL BE ALLOWED:
a.) INSTALL TIE BARS OF THE SIZE SHOWN ABOVE AT 1/2 SPACING.
b.) INSTALL TIE BARS 1/4" LARGER THAN THE TIE BAR DIAMETER SHOWN ABOVE AT SAME SPACING.

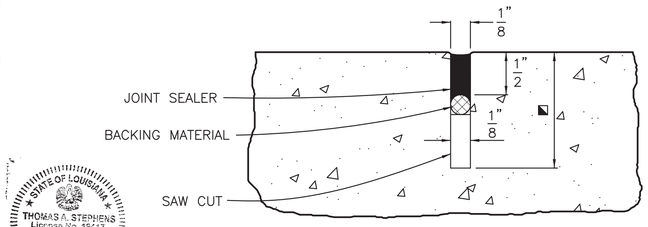

DETAIL "D"
POURED JOINT (SAWED)
TYPE LJ
■ SEE TABLE 1 ON SHEET 1.

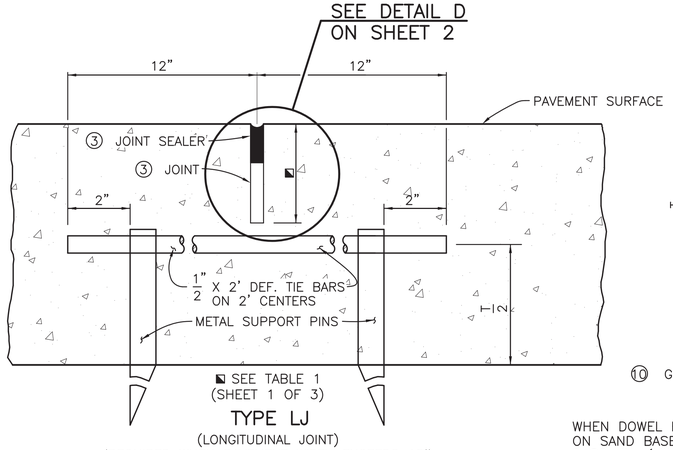

TYPE LJ
(LONGITUDINAL JOINT)
(REQUIRED WHEN PAVEMENT WIDTH EXCEEDS 15')

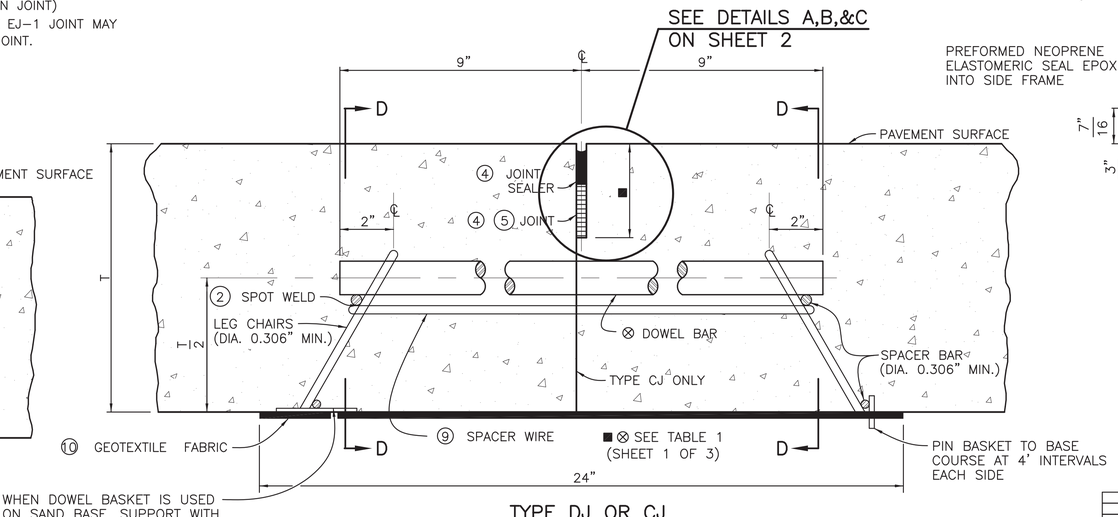

WHEN DOWEL BASKET IS USED ON SAND BASE, SUPPORT WITH 9 SQ. IN. (MIN.) SQUARE OR ROUND PLATE

TYPE DJ OR CJ
(TRANSVERSE DUMMY JOINT OR CONSTRUCTION JOINT)

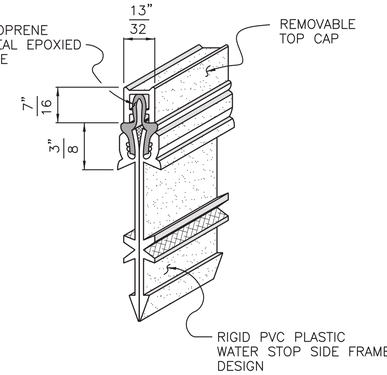

SEALINSERT DETAIL "A"

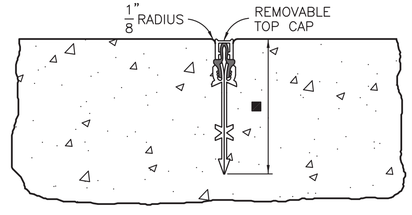

DETAIL "A"
COMBINATION JOINT FORMER / SEALER
■ SEE TABLE 1 ON SHEET 1



STANDARD PLAN NO.	DATED	SHEET NO.
502-01	January 18, 2008	2 OF 3

CONCRETE PAVEMENT

DETAILS

DATE	DESCRIPTION REVISIONS	BY

ENGINEERING DIVISION
DEPARTMENT OF PUBLIC WORKS
CITY OF BATON ROUGE & PARISH OF EAST BATON ROUGE

DESIGNED	DRAWN	CHECKED	APPROVED
R.E.E./N.A.R.	G. VANNICE	N.A.R./R.E.E.	T. STEPHENS

PROJECT NO.	SHEET
12-CS-HC-0043	602

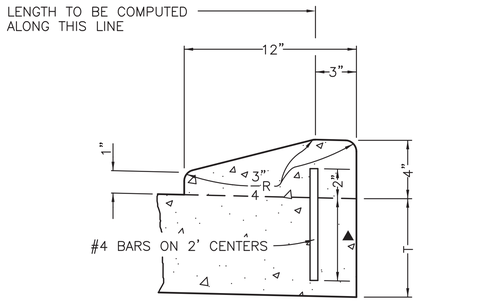

(MOUNTABLE TYPE) ▲ 4" FOR 6" PAVEMENT
6" FOR 8" TO 10" PAVEMENT

INTEGRAL CONCRETE CURB

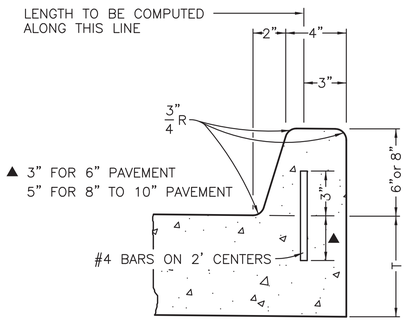

(BARRIER TYPE)

INTEGRAL CONCRETE CURB

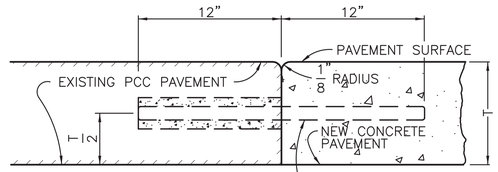

TYPE LBJ
(LONGITUDINAL BUTT JOINT)

SECTION H–H

1/2"x 2' DEF. TIE BARS ON 2' CENTERS SHALL BE INSTALLED IN THE EXISTING PAVEMENT BY DRILLING 5/8" DIA. HOLES TO A DEPTH OF 12". HOLES SHALL BE FILLED IN ACCORDANCE WITH SUBSECTION 502–5(c).

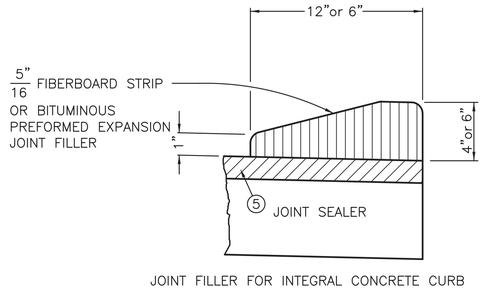

JOINT FILLER FOR INTEGRAL CONCRETE CURB

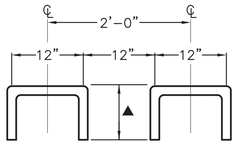

BAR DETAIL

SHOWING DIMENSIONS AND SPACING OF #4 DEF. REIN. STEEL BARS FOR CONC. CURB

▲ 6" FOR 6" PAVEMENT
8" FOR 8" TO 10" PAVEMENT

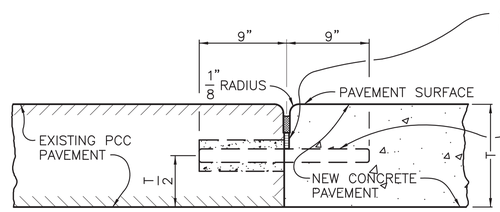

TYPE BJ
(TRANSVERSE BUTT JOINT)

SECTION J–J
⊗ SEE TABLE 1 ON SHEET 1

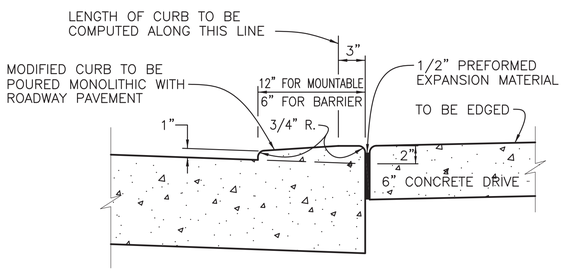

CONSTRUCTION JOINT AT CONCRETE DRIVES



STANDARD PLAN NO.	DATED	SHEET NO.
502–01	January 18, 2008	3 OF 3

CONCRETE PAVEMENT

DETAILS

DATE	DESCRIPTION REVISIONS	BY

ENGINEERING DIVISION
DEPARTMENT OF PUBLIC WORKS
CITY OF BATON ROUGE & PARISH OF EAST BATON ROUGE

DESIGNED	DRAWN	CHECKED	APPROVED
R.E.E./N.A.R.	G. VANNICE	N.A.R./R.E.E.	T. STEPHENS

PROJECT NO.	SHEET
12-CS-HC-0043	603

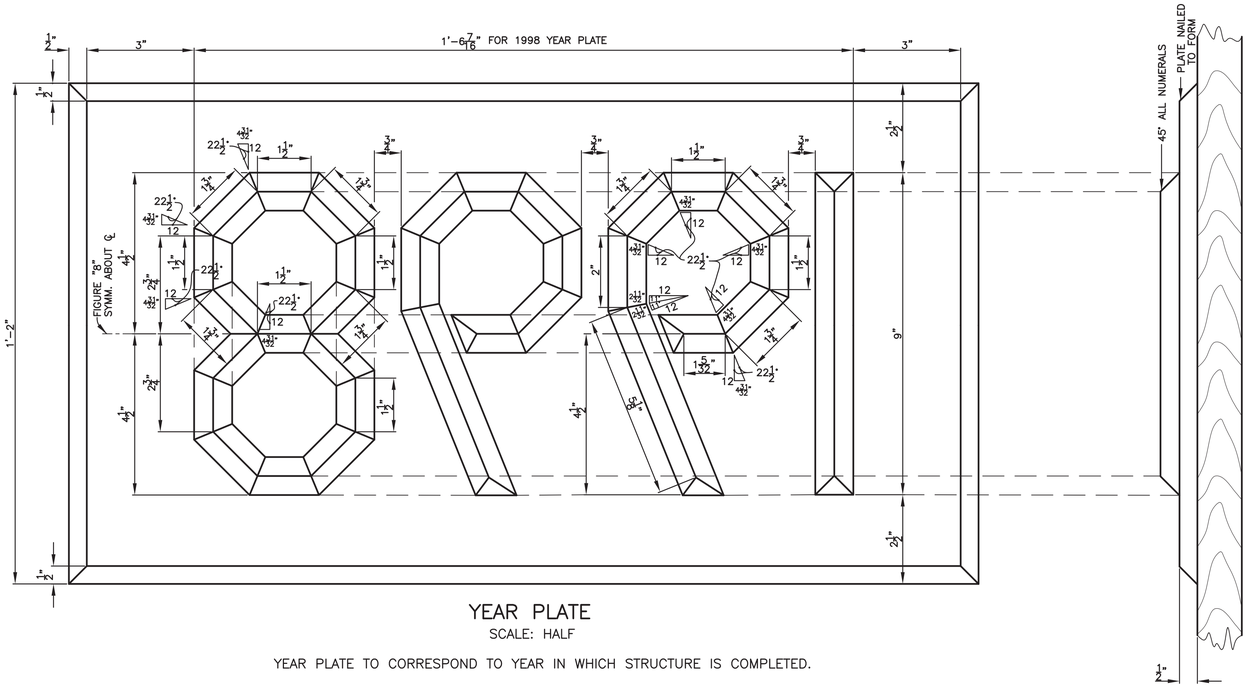

YEAR PLATE

SCALE: HALF

YEAR PLATE TO CORRESPOND TO YEAR IN WHICH STRUCTURE IS COMPLETED.

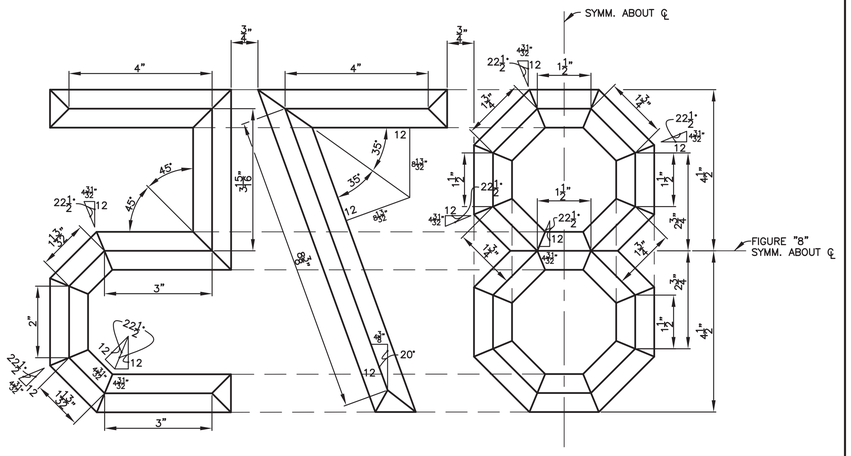

NOTE:
FIGURE "6" TO BE "9" INVERTED.
FIGURE "0" TO BE MADE AS DASHED LINES INDICATED ON DETAIL OF FIGURE "8".

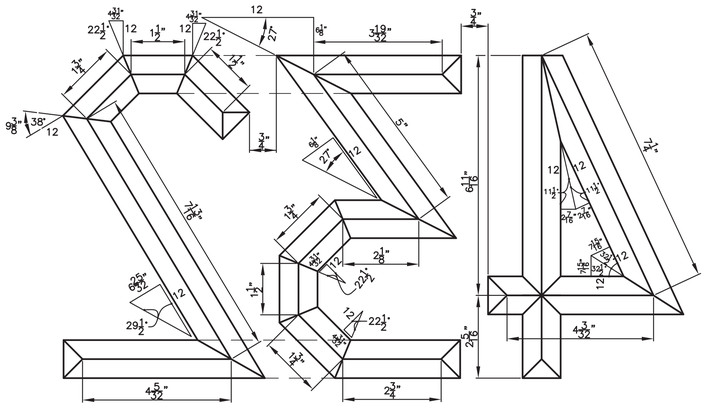

YEAR PLATE NUMERALS

SCALE: HALF

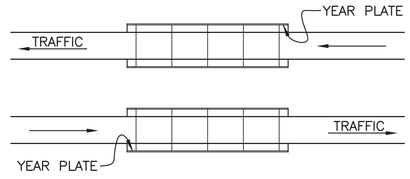

PLATE LOCATIONS FOR TWIN BRIDGE SITES

NOTE:
YEAR PLATE REQUIRED AT BOTH ENDS OF TWO-WAY TRAFFIC BRIDGE ON ONCOMING SIDE.

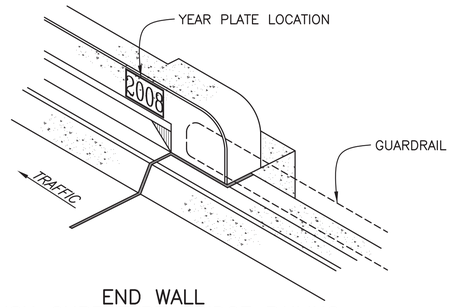

END WALL
BRUSH CURB TYPE BRIDGE RAILING

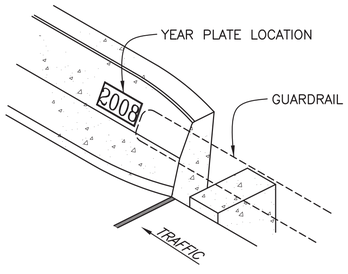

END WALL
BARRIER TYPE BRIDGE RAILING

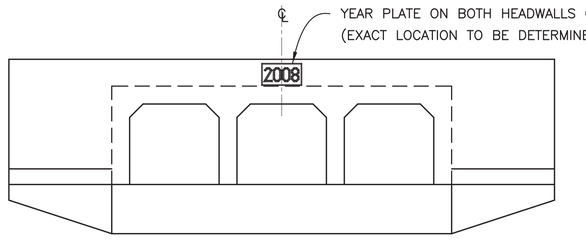

CULVERT
ELEVATION

SKETCHES SHOWING LOCATION OF YEAR PLATE ON VARIOUS CONCRETE STRUCTURES

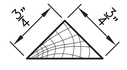

FULL SIZE CROSS SECTION OF ¾" CHAMFER STRIP TO BE USED IN CONSTRUCTING ALL LETTERS FOR YEAR PLATE.

YEAR PLATE MATERIAL

SCALE: FULL

STATE OF LOUISIANA
THOMAS A. STEPHENS
License No. 19417
PROFESSIONAL ENGINEER
IN
CIVIL ENGINEERING
2/14/2008

DATE	DESCRIPTION REVISIONS	BY

STANDARD PLAN NO.	DATED	SHEET NO.
601–04	FEBRUARY 18, 2008	1 OF 1

YEAR PLATES FOR CONCRETE STRUCTURES

ENGINEERING DIVISION
DEPARTMENT OF PUBLIC WORKS
CITY OF BATON ROUGE & PARISH OF EAST BATON ROUGE

DESIGNED	DRAWN	CHECKED	APPROVED
R. ELLIS	G. VANNICE	R. ELLIS	T. STEPHENS

ENGINEERING AGADR13 STDLAY FORM C.V.

PROJECT NO.	SHEET
12-CS-HC-0043	604

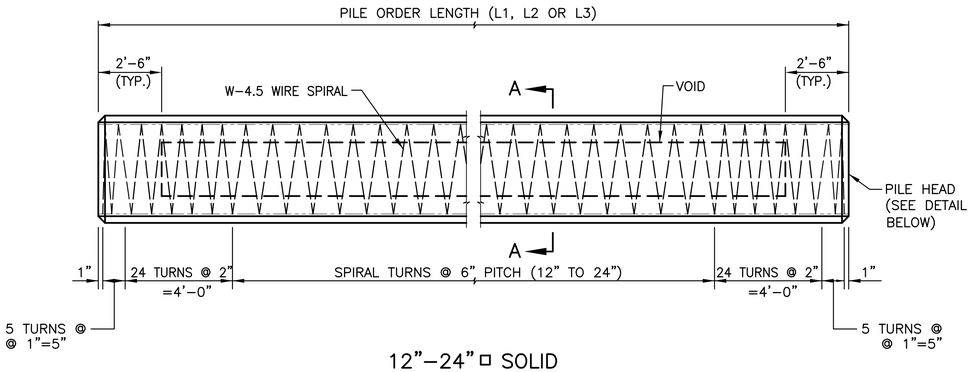

12"–24" □ SOLID PRECAST–PRESTRESSED CONCRETE PILES

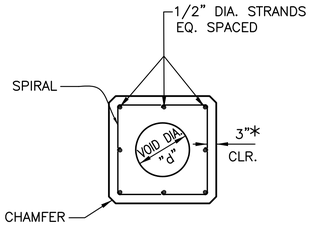

SECTION A–A

* 2" FOR 12" & 14" PILE SIZE

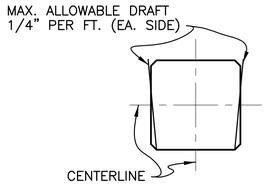

DRAFT DETAIL

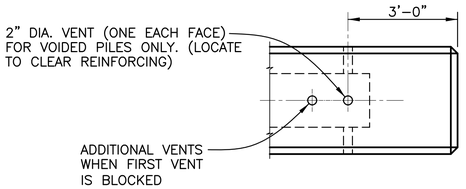

PILE HEAD DETAIL

NOTE: VENTS REQUIRED FOR PILE HEAD ONLY

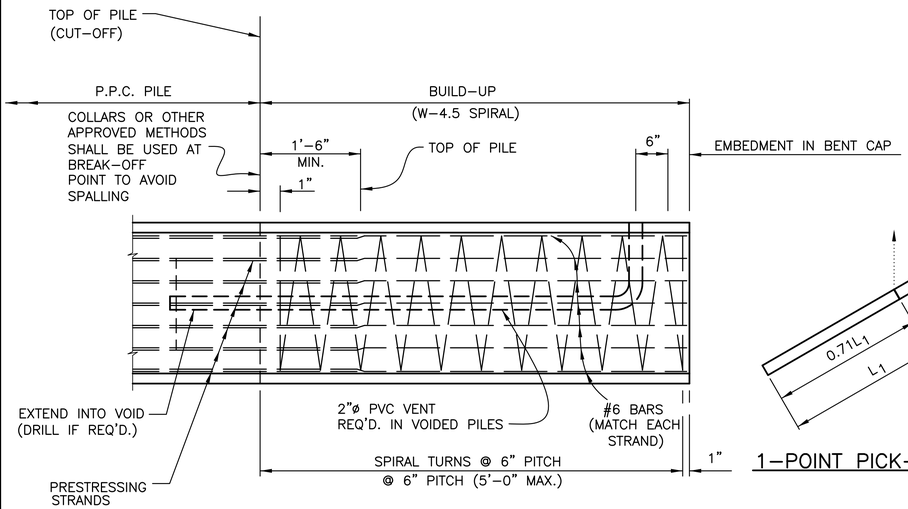

TYPICAL BUILD–UP WHERE REDRIVING IS NOT REQUIRED

1–POINT PICK–UP

NOTE: PICK–UP POINTS TO BE PLAINLY MARKED ON PILES.

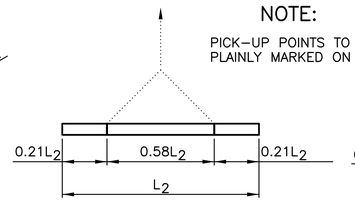

2–POINT PICK–UP

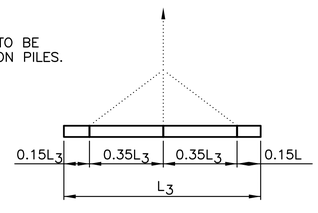

3–POINT PICK–UP

PICK–UP DETAILS

2 POINT PICK–UP SHALL TAKE PRECEDENCE OVER 3 POINT PICK–UP WHERE APPLICABLE. FOR LONGER PILE LENGTHS THAT REQUIRE A 3 POINT PICK–UP, BUT CAN BE PROVIDED WITH A 2 POINT PICK–UP USING THE 6000 PSI CONCRETE OPTION (CLASS P(M) CONCRETE), THE CONTRACTOR SHALL FURNISH THE 2 POINT PICK–UP VERSION.

PILE INFORMATION

SECTION PROPERTIES						SQUARE SPIRAL LAYOUTS (CLASS P CONCRETE)						SQUARE SPIRAL LAYOUTS (CLASS P(M) CONCRETE)					
PILE SIZE	VOID "d" (in.)	AREA ($in.^2$)	SECTION MODULUS ($in.^3$)	WEIGHT PER FOOT (lb/ft.)	CHAMFER (in.)	NO. OF STRANDS	PRESTRESS IN CONCRETE (PSI.) AT RELEASE	PRESTRESS IN CONCRETE (PSI.) AT 90 DAYS	MAX. CASTING LENGTH (ft.) L_1	MAX. CASTING LENGTH (ft.) L_2	MAX. CASTING LENGTH (ft.) L_3	NO. OF STRANDS	PRESTRESS IN CONCRETE (PSI.) AT RELEASE	PRESTRESS IN CONCRETE (PSI.) AT 90 DAYS	MAX. CASTING LENGTH (ft.) L_1	MAX. CASTING LENGTH (ft.) L_2	MAX. CASTING LENGTH (ft.) L_3
12 SOLID	0	144	288	150	3/4"	4	828	770	52.8	74.8	106.8	4	830	774	53.7	76.1	108.6
14 SOLID	0	196	457	204	3/4"	8	1200	1109	56.4	79.9	114.1	8	1203	1116	66.0	93.4	133.4
16 SOLID	0	256	683	267	3/4"	8	928	867	63.6	90.0	128.5	12	1373	1273	67.6	95.7	136.7
18 SOLID	0	324	972	338	3/4"	12	1093	1020	66.8	94.5	134.9	12	1096	1026	72.6	102.7	146.7
20 SOLID	0	400	1333	417	1 1/2"	12	892	839	70.3	99.5	142.1	16	1180	1106	78.7	111.3	159.0
24 SOLID	0	576	2304	600	1 1/2"	20	1027	968	78.9	111.8	159.6	24	1227	1154	86.7	122.7	175.2
24 VOIDED	10.5	489	2254	510	1 1/2"	16	970	903	84.8	120.1	171.4	20	1204	1119	92.9	131.4	187.7
30 VOIDED	16.5	686	4257	715	1 1/2"	24	1035	964	98.3	139.1	198.6	28	1203	1120	107.8	152.6	217.9
36 VOIDED	22.5	898	7077	936	1 1/2"	28	926	866	109.3	154.6	220.8	36	1182	1102	120.8	170.9	244.1

DETAILS ON THIS SHEET NOT TO SCALE

GENERAL NOTES

CONCRETE: THE CONTRACTOR SHALL DESIGN AND SUBMIT FOR APPROVAL A CONCRETE MIX WITH MINIMUM COMPRESSIVE CYLINDER STRENGTH OF 6000 psi AT 28 DAYS. CONCRETE STRENGTH AT THE TIME OF TRANSFER OF PRESTRESSED FORCE SHALL BE 4500 psi OR GREATER. BUILD–UP CONCRETE SHALL MEET OR EXCEED THE DESIGN PROPERTIES OF THE ORIGINAL PILE. BUILD–UP CONCRETE NOT MEETING THE ABOVE REQUIREMENTS WILL BE REMOVED AND REPLACED WITH CONCRETE THAT DOES.

PRESTRESSING STEEL: PRETENSIONED REINFORCEMENT SHALL BE 1/2" DIA. SEVEN–WIRE, UNCOATED LOW–RELAXATION, GRADE 270 AND SHALL CONFORM TO THE REQUIREMENTS OF AASHTO M203. AN INITIAL TENSION OF 30,980 LBS. SHALL BE APPLIED TO EACH STRAND.

DEFORMED REINFORCING STEEL: REINFORCING STEEL SHALL BE DEFORMED BILLET STEEL BARS, GRADE 60 AND SHALL MEET THE REQUIREMENTS OF AASHTO M31.

SPIRAL REINFORCING STEEL: SPIRAL REINFORCING STEEL SHALL BE SIZED W–4.5 COLD–DRAWN STEEL WIRE AND SHALL CONFORM TO AASHTO M 32M.

FABRICATION TOLERANCES: MANUFACTURE OF THE PILING AND FABRIICATION TOLERANCES SHALL BE IN ACCORDANCE WITH THE "MANUAL FOR QUALITY CONTROL FOR PLANTS AND PRODUCTION OF STRUCTURAL PRECAST CONCRETE PRODUCTS (MNL–116, LATEST EDITION)" PUBLISHED BY PCI.

CHAMFERS AND CORNERS: ON PILES 18"ø OR SMALLER, ALL EXPOSED CONCRETE CORNERS ARE TO HAVE 3/4" CHAMFERS. ON PILES 20"ø OR LARGER, ALL EXPOSED CONCRETE CORNERS ARE TO HAVE 1 1/2" CHAMFERS. A 1" RADIUS CURVE WILL BE PERMITTED IN LIEU OF CHAMFERS SHOWN ABOVE. HOWEVER, ALL PILES FURNISHED SHALL BE OF THE SAME CONFIGURATION.

PICK–UP AND HANDLING: LOADING CRITERIA ARE BASED ON CAREFUL HANDLING OF THE PILE. ROTATION OF THE PILE IN THE SLING IS TO BE PREVENTED UNTILL THE PILE IS IN THE VERTICAL POSITION. PICK–UP POINTS FOR ALL PILES ARE TO BE CLEARLY MARKED ON PILES. SUPPORTS FOR STORAGE SHALL BE AT PICK–UP POINTS (FOR 1–POINT PICK–UP USE SUPPORT 0.29L1 FROM EACH END). PILES WILL BE MADE AT A CENTRAL PLANT AND BE TRANSPORTED TO THE BRIDGE SITE. ALL PRESTRESSED PILING SHALL BE HELD AT THE PLANT FOR 14 DAYS AFTER CASTING, PROVIDING THE COMPRESSIVE STRENGTH OF 5000 psi HAS BEEN ATTAINED. PICK–UP POINTS SHALL BE SENT TO THE BRIDGE DESIGN ENGINEER FOR REVIEW. ALL EMBEDDED LIFTING LOOPS SHALL BE PROVIDED WITH 2" DEEP FOAM BLOCKOUTS, PRIOR TO TRANSPORT. LIFTING LOOPS SHALL BE REMOVED TO PROVIDE 2" MINIMUM CLEAR COVER. THE REMAINING CAVITIES SHALL BE CLEANED OF ALL SLAG AND LOOSE MATERIAL, AND THEN FILLED WITH A PATCHING MATERIAL FROM LADOTD NO. 49. THE PATCHING MATERIAL MUST MEET OR EXCEED PILE CONCRETE REQUIREMENTS FOR STRENGTH AND PERMEABILITY.

VENT HOLES: FOR VOIDED PILES THAT REQUIRE BUILD–UP OR CUT–OFF. THE 2"ø VENT HOLES SHALL BE RE–ESTABLISHED AT 6" BELOW THE BOTTOM OF THE BENT CAP.

DRIVING: PILES SHALL BE DRIVEN TO AT LEAST THE MINIMUM TIP ELEVATION AS SHOWN ON CONTRACT PLANS UNLESS OTHERWISE DIRECTED BY THE PROJECT ENGINEER. PILES SHALL BE DRIVEN TO TOLERANCES SPECIFIED IN THE STANDARD SPECIFICATIONS.

PRESTRESSED LOSSES: BASED ON "RECOMMENDATION FOR ESTIMATING PRESTRESSED LOSSES" PCI JOURNAL VOL 20 JULY/AUGUST. 1975. PERCENT OF ULTIMATE SHRINKAGE EQUAL TO 31% AND 62% FOR 14 DAYS AND 90 DAYS RESPECTIVELY. PERCENT ULTIMATE CREEP EQUAL TO 26% AND 51% FOR 14 DAYS AND 90 DAYS RESPECTIVELY.

ALLOWABLE STRESSES: THE MAXIMUM LENGTHS FROM PICK–UP HAVE BEEN DETERMINED USING THE FOLLOWING ALLOWABLE STRESS (2007 AASHTO LRFD BRIGE SPECS. 5.9.4.2.1, 5.9.4.2.2, & 5.13.4.4.3) AT BOTH 14 DAYS AND 90 DAYS.

ALLOWABLE TENSILE STRESS (ksi): $0.19\sqrt{f'_c}$
ALLOWABLE COMPRESSION STRENGTH (ksi): $0.45f'_c$
IMPACT FACTOR 1.5
MIN. FINAL COMPRESSIVE STRESS 0.7 ksi

STATE OF LOUISIANA
THOMAS A. STEPHENS
License No. 19417
PROFESSIONAL ENGINEER
IN
CIVIL ENGINEERING

JUNE 5, 2013

DATE	DESCRIPTION REVISIONS	BY

STANDARD PLAN NO.	DATED	SHEET NO.
605–01	February 8, 2008	1 OF 1

PRECAST PRESTRESSED CONCRETE PILES

ENGINEERING DIVISION
DEPARTMENT OF PUBLIC WORKS
CITY OF BATON ROUGE & PARISH OF EAST BATON ROUGE

DESIGNED	DRAWN	CHECKED	APPROVED
T. STEPHENS	G. VANNICE	G. CHENG	T. STEPHENS

PROJECT NO.	SHEET
12-CS-HC-0043	605

RIGID PIPE

(REINFORCED CONCRETE)

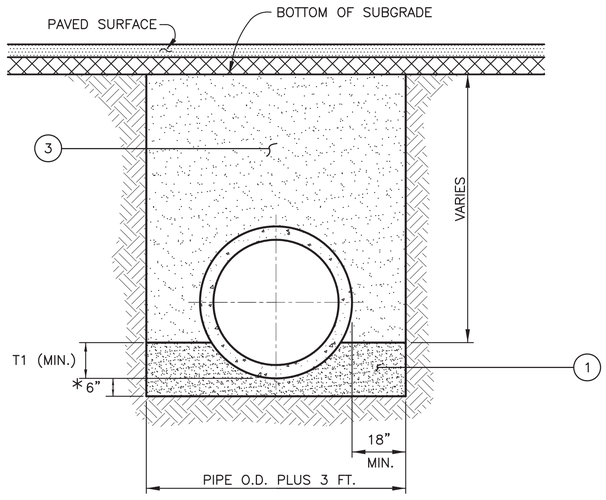

PIPE UNDER OR WITHIN 5 FEET OF STREETS AND PAVED SURFACES.

SCALE: 1/2"=1'-0"

FLEXIBLE PIPE

(CORRUGATED METAL, POLYVINYL CHLORIDE, AND POLYETHYLENE)

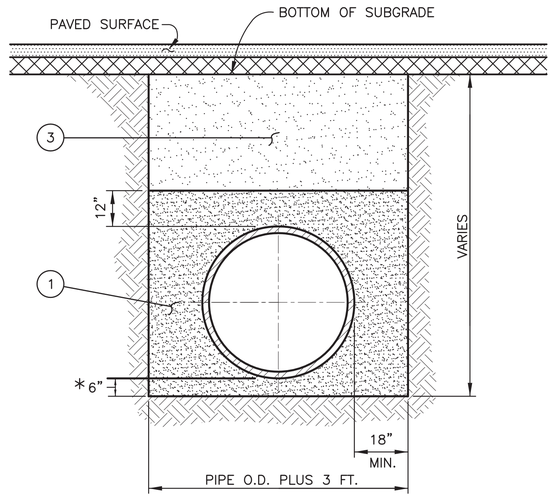

PIPE UNDER OR WITHIN 5 FEET OF STREETS AND PAVED SURFACES.

SCALE: 1/2"=1'-0"

TYPICAL BEDDING DETAIL FOR REINFORCED CONCRETE BOX CULVERT

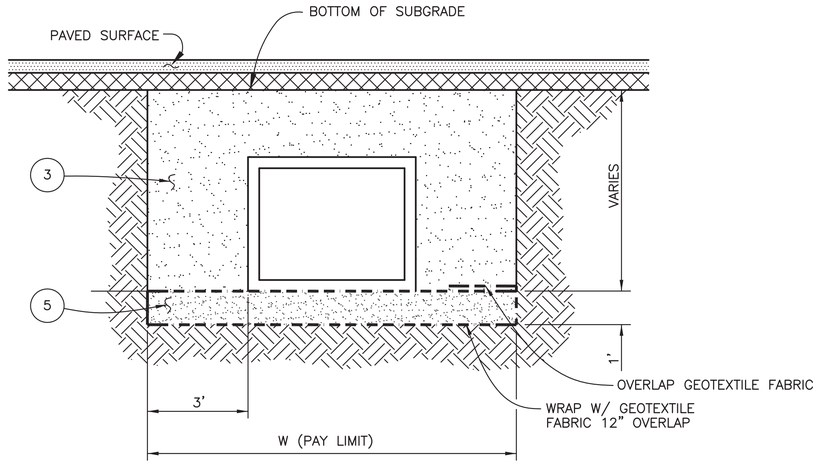

SCALE: 1/2"=1'-0"

GENERAL NOTES

ALL MATERIALS AND WORK SHALL CONFORM TO THE LATEST EDITION OF THE CITY OF BATON ROUGE AND PARISH OF EAST BATON ROUGE-"STANDARD SPECIFICATIONS FOR PUBLIC WORKS CONSTRUCTION".

* BEDDING UNDER PIPE SHALL BE 6" UNLESS OTHERWISE SPECIFIED IN THE PLANS OR SPECIAL PROVISIONS.

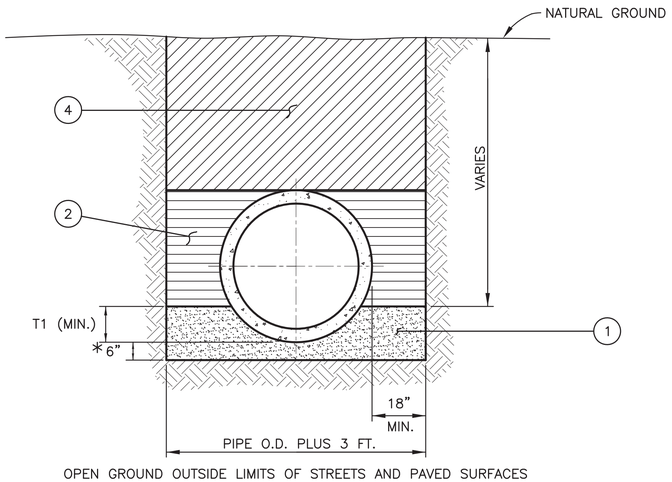

OPEN GROUND OUTSIDE LIMITS OF STREETS AND PAVED SURFACES

SCALE: 1/2"=1'-0"

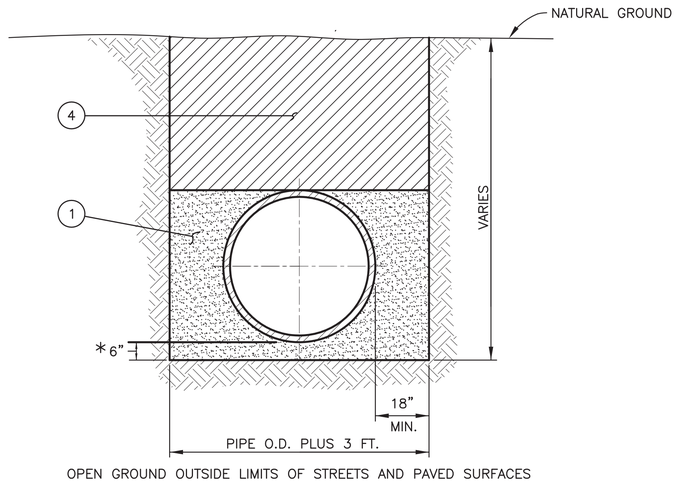

OPEN GROUND OUTSIDE LIMITS OF STREETS AND PAVED SURFACES

SCALE: 1/2"=1'-0"

LEGEND

1. BEDDING MATERIAL COMPACTED TO 95% STANDARD PROCTOR DENSITY. (NO DIRECT PAY).
2. BACKFILL MATERIAL (QUALITY EXCAVATED OR SELECT MATERIAL OR SAND). COMPACTED TO A DENSITY AT LEAST EQUAL TO SURROUNDING UNDISTURBED SOIL. (NO DIRECT PAY).
3. BACKFILL MATERIAL (BACKFILL SAND), COMPACTED TO 95% STANDARD PROCTOR DENSITY. (NO DIRECT PAY).
4. BACKFILL MATERIAL (QUALITY EXCAVATED OR SELECT MATERIAL). COMPACTED TO A DENSITY AT LEAST EQUAL TO THE SURROUNDING UNDISTURBED SOIL. (NO DIRECT PAY).
5. 67 LIMESTONE W/ GEOTEXTILE FABRIC.

PIPE BEDDING SCHEDULE

(RIGID PIPE)

PIPE SIZE	T1 (MIN.)
12"-30"	6"
36"-60"	12"
66"-96"	18"

STATE OF LOUISIANA
THOMAS A. STEPHENS
License No. 19417
PROFESSIONAL ENGINEER
IN
CIVIL ENGINEERING
2/14/2012

DATE	DESCRIPTION REVISIONS	BY

STANDARD PLAN NO.	DATED	SHEET NO.
701-01	February 8, 2008	1 OF 1

STANDARD BEDDING AND BACKFILL DETAILS FOR STORM DRAINAGE CONDUIT

ENGINEERING DIVISION
DEPARTMENT OF PUBLIC WORKS
CITY OF BATON ROUGE & PARISH OF EAST BATON ROUGE

DESIGNED	DRAWN	CHECKED	APPROVED
R. ELLIS	G. VANNICE	R. ELLIS	T. STEPHENS

PROJECT NO.	SHEET
12-CS-HC-0043	606

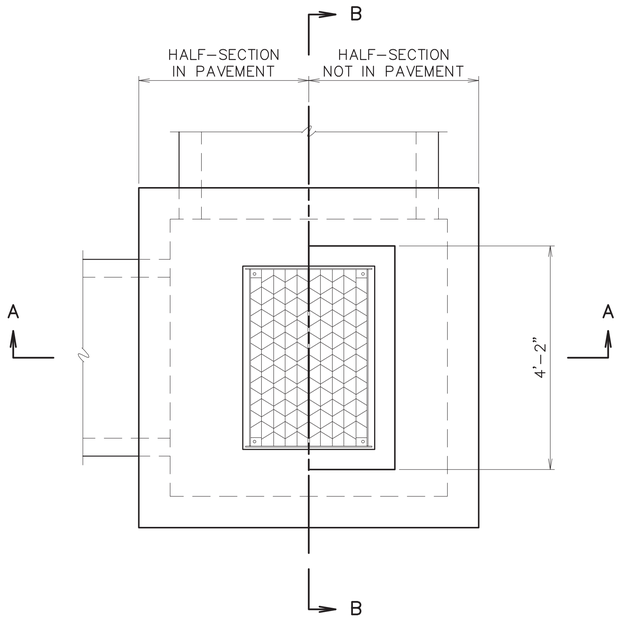

TOP VIEW

TYPE 2 FRAME WITH RETICULINE GRATE SHOWN

SCALE: 3/4"=1'–0"

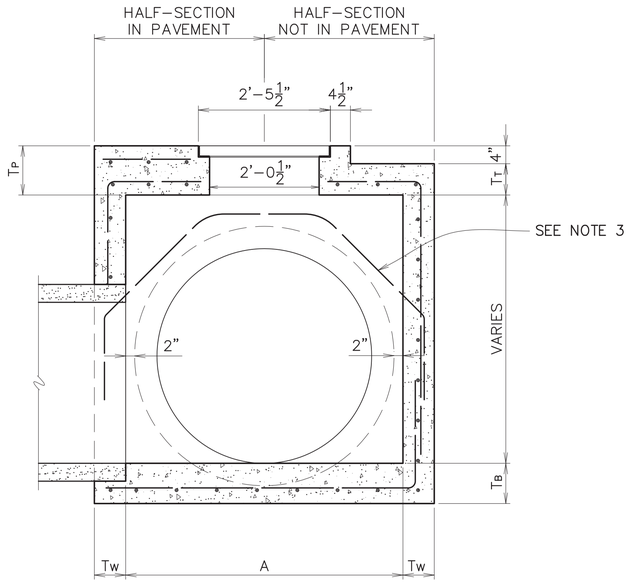

SECTION A–A

SCALE: 3/4"=1'–0"

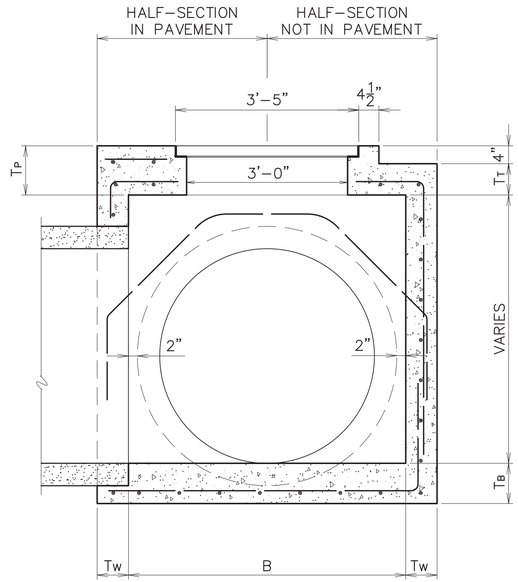

SECTION B–B

SCALE: 3/4"=1'–0"

PIPE SIZE		DIMENSION	
ROUND PIPE	ARCH PIPE (ROUND EQUIV.)	A	B
15"	–	2'–0"	3'–0"
18"	15"	2'–3"	3'–0"
24"	18"	2'–10"	3'–0"
30"	24"	3'–5"	3'–5"
36"	30"	4'–0"	4'–0"
42"	36"	4'–8"	4'–8"
48"	–	5'–2"	5'–2"
54"	42"	5'–9"	5'–9"
60"	48"	6'–4"	6'–4"
–	54"	6'–8"	6'–8"
72"	60"	7'–6"	7'–6"
84"	72"	8'–10"	8'–10"

NOTE:

1. SEE STANDARD PLAN 702–99 FOR FRAME AND COVER DETAILS. TYPE 2 FRAME AND COVER REQUIRED.
2. PRECAST CONCRETE STRUCTURES CONFORMING TO STANDARD PLAN 702–97 MAY BE FURNISHED.
3. DIAGONAL REINFORCEMENT REQUIRED FOR PIPE LARGER THAN 36". BARS SHALL LAP TO A FULL LENGTH VERTICAL BAR W/18d LAP LENGTH.
4. DIMENSION A & B MAY BE VARIED FOR SKEWED PIPE.
5. SEE STANDARD PLAN 702–96 FOR THICKNESS, REINFORCING STEEL, AND OTHER STRUCTURAL DETAILS.
6. SEE STANDARD PLAN 702–98 FOR FOR CURB TRANSITION DETAILS.

STATE OF LOUISIANA
THOMAS A. STEPHENS
License No. 19417
PROFESSIONAL ENGINEER
IN
CIVIL ENGINEERING
2/14/2018

DATE	DESCRIPTION REVISION	BY

STANDARD PLAN No.	DATED	SHT. No.
702–12	DEC. 6, 2010	1 OF 1

RIVETED RETICULINE OR FABRICATED BAR SINGLE GRATE INLET

ENGINEERING DIVISION
DEPARTMENT OF PUBLIC WORKS
CITY OF BATON ROUGE & PARISH OF EAST BATON ROUGE

DESIGNED	DRAWN	CHECKED	APPROVED
GLP	GLP	GLP	T. STEPHENS

PROJECT NO.	SHEET
12-CS-HC-0043	607

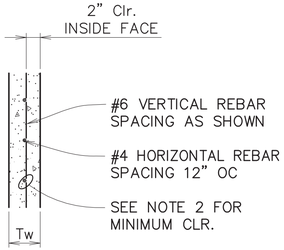

STANDARD WALL DETAIL

SCALE: N.T.S.

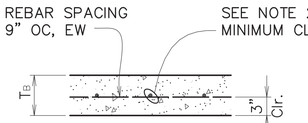

BOTTOM SLAB DETAIL

SCALE: N.T.S.

WALL DIMENSIONS

WALL HEIGHT (FT)	"Tw" WALL THICKNESS (IN)	VERT. REBAR SPACING (IN)
0'–4'	6.0"	12"
4'–8'	6.0"	9"
8'–10'	7.0"	9"
10'–12'	7.0"	6"
12'–16'	8.0"	6"
16'–20'	9.0"	6"

BOTTOM SLAB DIMENSIONS

"TB" SLAB THICKNESS (IN)	"A" OR "B" MAXIMUM WIDTH OF OPENING INSIDE STRUCTURE (FT)	MAXIMUM DEPTH STRUCTURE (FT)	REBAR REQ'D
6.0"	4'	8'	#4
7.0"	6'	12'	#5
8.0"	8'	16'	#5
9.0"	10'	20'	#6

BOTTOM SLAB THICKNESS TO MEET MINIMUM CRITERIA SHOWN FOR OPENING WIDTH AND STRUCTURE DEPTH.

PAVEMENT SLAB DIMENSIONS

"A" INSIDE LENGTH (FT)	"B" INSIDE WIDTH (FT)	"TP" SLAB THICKNESS (IN)	REBAR REQ'D *	INTERMEDIATE SUPPORT BEAM REQ'D (Y OR N)
≤10'	≤ 4'	7.0"	#5	N
≤10'	4'–6'	8.0"	#5	N
≤10'	6'–8'	10.0"	#6	N
6'–8'	6'–8'	7.0"	#5	Y
8'–10'	8'–10'	8.0"	#5	Y

* 9" OC, EW, TB

REBAR MINIMUM LAP AND DEVELOPMENT LENGTHS

REBAR SIZE	LAP LENGTH (IN)	DEVELOPMENT LENGTH (IN)
#4	16"	12"
#5	20"	16"
#6	24"	19"

SHOP DRAWING DETAILING REQ'D TO PROVIDE MINIMUM LENGTHS OR ELSE USE STANDARD HOOKS

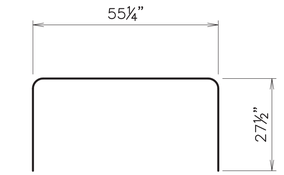

#5 BAR A

SCALE: N.T.S.
2 REQ'D PER FRAME



#5 BAR B

SCALE: N.T.S.
1 REQ'D PER FRAME

ABBREVIATIONS:
OC – ON CENTER
EW – EACH WAY
TB – TOP & BOTTOM

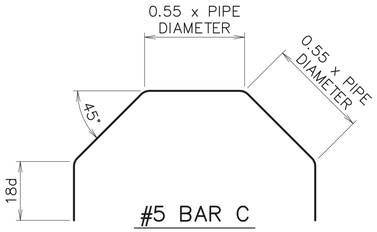

#5 BAR C

SCALE: N.T.S.
1 REQ'D PER PIPE ENTRANCE ≥ 36"ø

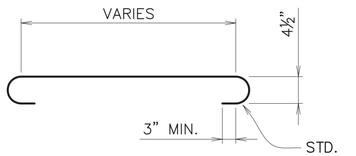

#5 BAR D

SCALE: N.T.S.
2 REQ'D PER EACH INTERMEDIATE BEAM

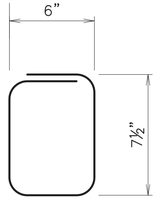

#3 BAR J

SCALE: N.T.S.
REQ'D STIRRUPS @ 4" OC

NOTE:
1. ALL REINFORCING STEEL TO BE DEFORMED GRADE 60 MINIMUM REBAR. STEEL BAR SIZE & SPACING MAY BE ADJUSTED AS LONG AS AREA OF STEEL IS MAINTAINED PER FOOT.
2. MINIMUM CONCRETE COVER FOR REBAR STEEL IS TO BE 3" FOR CONCRETE FACES CAST AGAINST EARTH, 2.5" FOR FACES PERMANENTLY EXPOSED TO EARTH AND 2" FOR ALL OTHERS.
3. CONCRETE COMPRESSIVE STRENGTH FOR CAST–IN–PLACE STRUCTURES TO BE 4000 PSI AT 28 DAYS MINIMUM.
4. SEE SHEET 702–99 FOR FRAME AND COVER DETAILS.
5. SLABS MAY BE PRECAST AND DOWELED INTO WALL SECTIONS. (SEE STD. PLAN 702–97)

A=LENGTH INSIDE OPENING MEASURED PARALLEL TO CURB
B=WIDTH INSIDE OPENING MEASURED PERPENDICULAR TO CURB

TOP SLAB DIMENSIONS

"A" INSIDE LENGTH (FT)	"B" INSIDE WIDTH (FT)	"TT" SLAB THICKNESS (IN)	* REBAR REQ'D
≤ 4'	≤ 4'	6.0"	#4
4'–6'	4'–6'	6.0"	#5
6'–8'	6'–8'	6.0"	#6
8'–20'	8'–10'	7.0"	#6

* 9" OC, EW, SET 2" CLR. FROM SLAB BOTTOM

MIDDLE SLAB UNDER PAVEMENT DIMENSIONS

"A" INSIDE LENGTH (FT)	"B" INSIDE WIDTH (FT)	"TMP" SLAB THICKNESS (IN)	* REBAR REQ'D
≤20'	≤ 4'	7.0"	#4
≤20'	4'–6'	7.0"	#5
≤20'	6'–8'	8.5"	#6
≤20'	8'–10'	10.0"	#6

* 9" OC, EW, SET 2" CLR. FROM SLAB BOTTOM

MIDDLE SLAB OUTSIDE PAVEMENT DIMENSIONS

"A" INSIDE LENGTH (FT)	"B" INSIDE WIDTH (FT)	"TM" SLAB THICKNESS (IN)	* REBAR REQ'D
≤20'	≤ 4'	7.0"	#4
≤20'	4'–6'	7.0"	#5
≤20'	6'–8'	7.0"	#6
≤20'	8'–10'	8.0"	#6

* 9" OC, EW, SET 2" CLR. FROM SLAB BOTTOM

LEDGE WIDTH MAY BE EXTENDED TO MAXIMUM WIDTH OF 1'–2" FOR SMALLER PIPE STRUCTURES TO SIMPLIFY CONSTRUCTION FRAMING OF TOP SLAB.

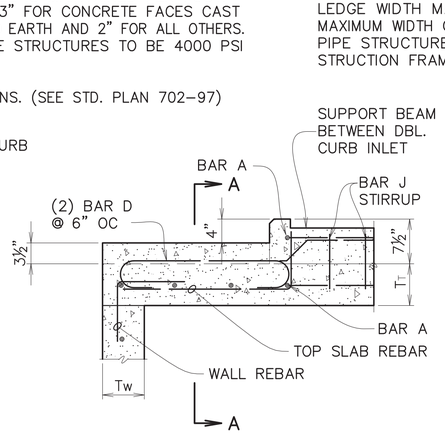

TOP SLAB
INTERMEDIATE SUPPORT BEAM
FOR DOUBLE CURB INLET
SCALE: N.T.S.

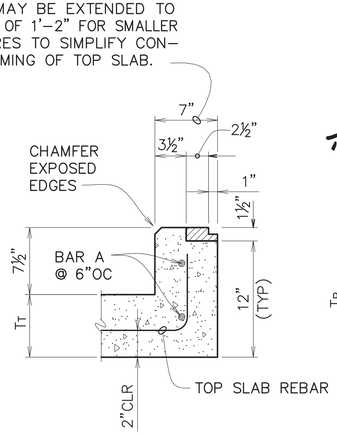

TYPE 1 FRAME SUPPORT DETAIL
SCALE: N.T.S.

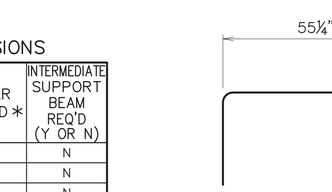

TYPE 2 FRAME IN PAVEMENT
SUPPORT DETAIL
SCALE: N.T.S.

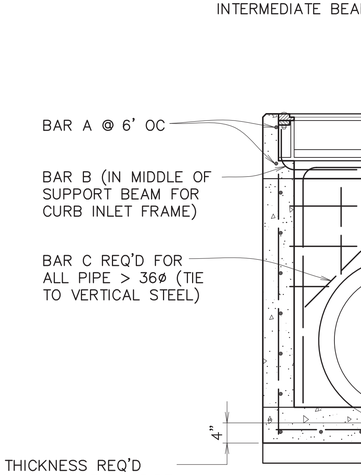

TYPICAL PIPE AND
FRAME REINFORCEMENT

SCALE: N.T.S.

4" MIN. THICKNESS REQ'D IN BOTTOM SLAB BELOW PIPE OUTSIDE WALL. IF "TB" DOES NOT MEET MIN. THICKNESS REQ'D FOR PIPE O.D., PROVIDE THICKENED EDGE WITH MIN. WIDTH OF 2xTw. REINFORCE AS REQ'D. FOR BASE SLAB.

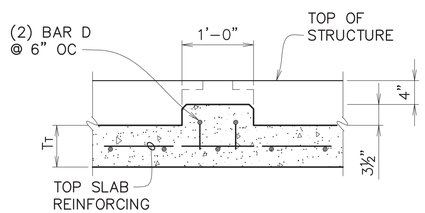

SECTION A–A

TOP SLAB
INTERMEDIATE SUPPORT BEAM
FOR DOUBLE CURB INLET
SCALE: N.T.S.

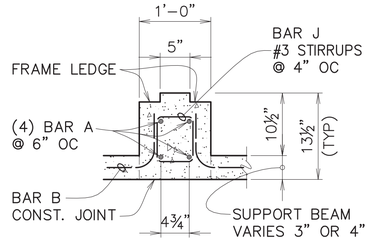

TYPICAL SUPPORT BEAM
BETWEEN DOUBLE CURB INLETS
SCALE: N.T.S.

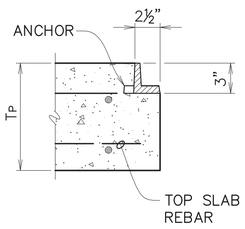

TYPE 3 FRAME IN PAVEMENT
SUPPORT DETAIL
SCALE: N.T.S.

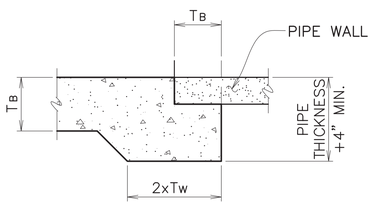

THICKENED EDGE
FOR PIPE SUPPORT
SCALE: N.T.S.

DATE	DESCRIPTION REVISION	BY

STANDARD PLAN No.	DATED	SHT. No.
702–96	DEC. 6, 2010	1 OF 1

CAST–IN–PLACE
DRAINAGE STRUCTURES
(STRUCTURAL DETAILS)

ENGINEERING DIVISION
DEPARTMENT OF PUBLIC WORKS
CITY OF BATON ROUGE & PARISH OF EAST BATON ROUGE

DESIGNED	DRAWN	CHECKED	APPROVED
GLP	GLP	GLP	T. STEPHENS

PROJECT NO.	SHEET
12-CS-HC-0043	608

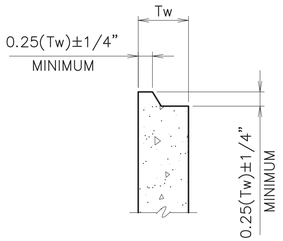

JOINT DETAIL

SCALE: N.T.S.

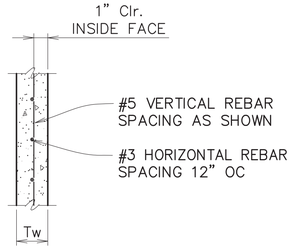

STANDARD
PRECAST WALL DETAIL

SCALE: N.T.S.

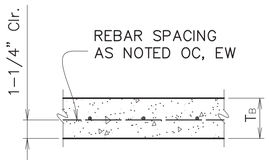

BOTTOM SLAB DETAIL

SCALE: N.T.S.

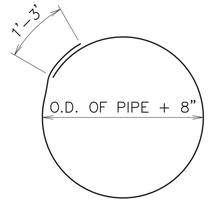

#4 HOOK

SCALE: N.T.S.

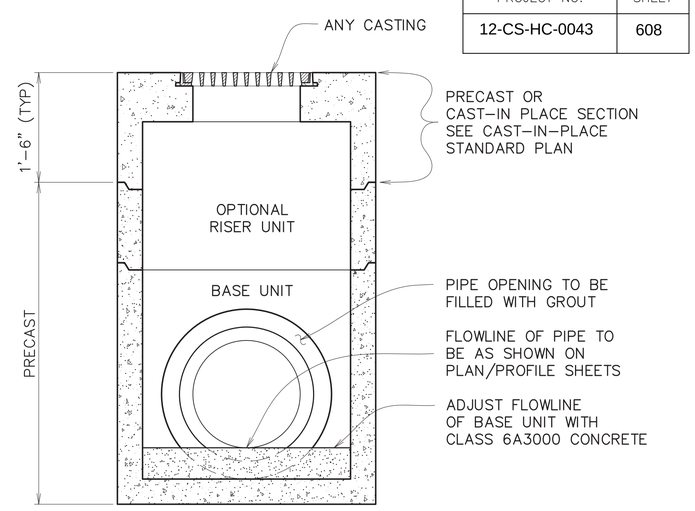

TYPICAL COMPOSITE STRUCTURE

SCALE: N.T.S.

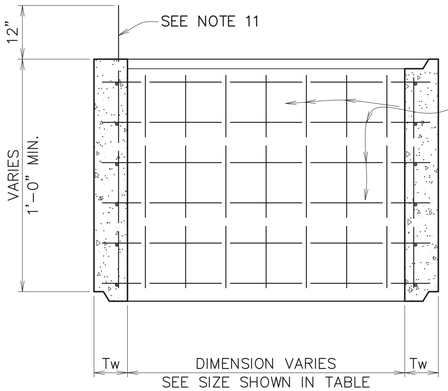

OPTIONAL RISER UNIT

SCALE: N.T.S.

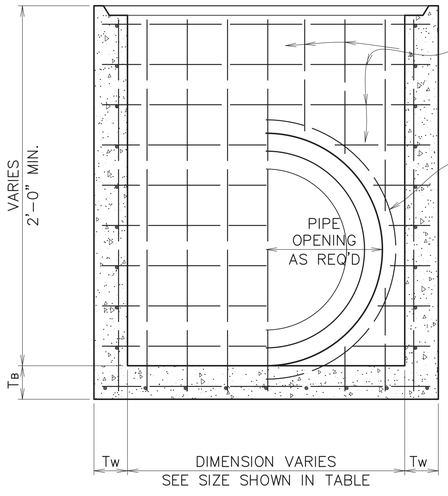

BASE UNIT

SCALE: N.T.S.

A=LENGTH INSIDE OPENING MEASURED PARALLEL TO CURB
B=WIDTH INSIDE OPENING MEASURED PERPENDICULAR TO CURB

PRECAST TOP SLAB DIMENSIONS

"A" INSIDE LENGTH (FT)	"B" INSIDE WIDTH (FT)	"TT" SLAB THICKNESS (IN)	* REBAR REQ'D	* REBAR SPACING
≤ 4'	≤ 4'	4.0"	#4	12"
4'-6'	4'-6'	4.0"	#5	12"
6'-8'	6'-8'	5.0"	#5	8"
8'-20'	8'-10'	5.5"	#5	6"

* AS SHOWN OC, EW, SET 1-1/4" CLR. FROM SLAB BOTTOM

PRECAST MIDDLE SLAB
UNDER PAVEMENT DIMENSIONS

"A" INSIDE LENGTH (FT)	"B" INSIDE WIDTH (FT)	"TMP" SLAB THICKNESS (IN)	* REBAR REQ'D	* REBAR SPACING
≤ 20'	≤ 4'	5.0"	#4	12"
≤ 20'	4'-6'	6.0"	#5	12"
≤ 20'	6'-8'	7.0"	#5	8"
≤ 20'	8'-10'	8.5"	#5	6"

* AS SHOWN OC, EW, SET 1-1/4" CLR. FROM SLAB BOTTOM

PRECAST MIDDLE SLAB
OUTSIDE PAVEMENT DIMENSIONS

"A" INSIDE LENGTH (FT)	"B" INSIDE WIDTH (FT)	"TM" SLAB THICKNESS (IN)	* REBAR REQ'D	* REBAR SPACING
≤20'	≤ 4'	5.0"	#4	12"
≤20'	4'-6'	5.0"	#5	12"
≤20'	6'-8'	6.0"	#5	8"
≤20'	8'-10'	6.5"	#5	6"

* AS SHOWN OC, EW, SET 1-1/4" CLR. FROM SLAB BOTTOM

PRECAST BOTTOM SLAB DIMENSIONS

"TB" SLAB THICKNESS (IN)	"A" OR "B" MAXIMUM WIDTH OF OPENING INSIDE STRUCTURE (FT)	MAXIMUM DEPTH STRUCTURE (FT)	REBAR REQ'D	REBAR SPACING
4.0"	4'	4'	#4	12"
5.0"	6'	8'	#5	12"
6.0"	8'	12'	#5	12"
7.0"	8'	16'	#5	12"
7.5"	10'	20'	#5	6"

BOTTOM SLAB THICKNESS TO MEET MINIMUM CRITERIA SHOWN FOR OPENING WIDTH AND STRUCTURE DEPTH.

PRECAST PAVEMENT SLAB DIMENSIONS

INTERMEDIATE SUPPORT BEAM REQ'D (Y OR N)	"A" INSIDE LENGTH (FT)	"B" INSIDE WIDTH (FT)	"TP" SLAB THICKNESS (IN)	REBAR REQ'D *	REBAR SPACING
N	≤10'	≤ 4'	6.0"	#5	12"
N	≤10'	4'-6'	7.0"	#5	12"
N	≤10'	6'-8'	9.0"	#5	8"
Y	6'-10'	6'-10'	6.0"	#5	12"

* AS SHOWN OC, EW, TB

PRECAST WALL DIMENSIONS

WALL HEIGHT (FT)	"Tw" WALL THICKNESS (IN)	VERT. REBAR SPACING (IN)
0'-4'	4.0"	12"
4'-8'	5.0"	12"
8'-10'	6.0"	9"
10'-12'	6.0"	6"
12'-16'	7.0"	4.5"
16'-20'	7.5"	4.5"

NOTE:

1. THESE PRECAST UNITS ARE INTENDED TO BE USED AS THE LOWER PORTION OF A COMPOSITE STRUCTURE. STRUCTURAL AND FINISHING DETAILS ARE SHOWN ON OTHER STANDARD PLANS FOR STRUCTURE TYPES.
2. ALL REINFORCING STEEL TO BE DEFORMED GRADE 60 MINIMUM REBAR. STEEL BAR SIZE & SPACING MAY BE ADJUSTED AS LONG AS AREA OF STEEL IS MAINTAINED PER FOOT IN ACCORDANCE WITH ASTM C913-08.
3. MINIMUM CONCRETE COVER FOR REBAR STEEL IS TO BE 1" FOR PRECAST CONCRETE WALLS AND 1-1/4" FOR OTHER PRECAST MEMBERS.
4. CONCRETE COMPRESSIVE STRENGTH FOR PRECAST STRUCTURES TO BE 5000 PSI AT 28 DAYS MINIMUM. CONCRETE SHALL ATTAIN A MINIMUM COMPRESSIVE STRENGTH OF 4000 PSI BEFORE SHIPPING UNITS.
5. SEE SHEET 702-99 FOR FRAME AND COVER DETAILS.
6. SEE SHEET 702-96 FOR CAST-IN-PLACE STRUCTURAL DETAILS.
7. PIPE OPENING TO BE FORMED ONLY WHEN REQUIRED.
8. PIPE OPENING TO BE O.D. OF PIPE + 4"± 1/2".
9. ALL PIPE ENDS TO BE SET FLUSH WITH INTERIOR WALLS FACE. PIPE ANNULAR SPACE IS TO BE GROUTED WITH NON-SHRINK GROUT AFTER INSTALLATION. GROUT AS REQUIRED TO CREATE INVERTS.
10. JOINTS BETWEEN PRECAST UNITS TO BE SEALED WITH FLEXIBLE PLASTIC GASKET MATERIAL AND WRAPPED WITH A 12" WIDTH OF GEOTEXTILE FABRIC.
11. JOINTS BETWEEN CAST-IN-PLACE SECTIONS AND OR PRECAST UNITS TO BE TONGUE AND GROOVE AND SEALED WITH TYPE II GRADE A EPOXY OR FLAT JOINT WITH A MINIMUM OF 12" OF No. 4 BARS AT 18" CTRS. (MAX.)
12. PRECAST CONCRETE INLETS CONFORMING TO STANDARD PLANS MAY BE FURNISHED. LEDGE WIDTH MAY BE REDUCED BY 1" AROUND INLET FRAMES TO 2-1/2". SUPPORT BEAM BETWEEN DOUBLE RETICULINE GRATE INLETS MAY BE REDUCED BY 2" DEPTH TO FORM 10"x10" BEAM.
13. PRECAST UNITS SHALL CONFORM TO SECTION 1017 OF THE STANDARD SPECIFICATIONS.
14. ALL PRECAST UNITS TO BE EQUIPPED WITH AT LEAST 2 COMMERCIALLY MANUFACTURED EMBEDDED INSERTS RATED FOR THE STRUCTURE'S LIFT LOAD IN COMPLIANCE WITH APPLICABLE ANSI AND OSHA STANDARDS (MINIMUM SAFETY FACTOR OF 4). EMBEDDED INSERTS TO CONSTRUCTED OF GALVANIZED STEEL OR CORROSION RESISTANT MATERIALS AND INSTALLED BY PRECAST MANUFACTURER IN ACCORDANCE WITH SUPPLIERS INSTRUCTIONS. NO LIFT INSERTS SHALL REMAIN EXPOSED ON VISIBLE SURFACES AFTER THE STRUCTURE IS INSTALLED. NO LIFTING WITH CHAINS WRAPPED AROUND STRUCTURE IS PERMITTED.
15. PRECASTERS ARE REQUIRED TO BE NPCA CERTIFIED.
16. INSTALLATION OF PRECAST STRUCTURES ARE TO BE PER MANUFACTURER'S INSTRUCTIONS. ANY MODIFICATIONS TO STRUCTURES IN FIELD SHALL REQUIRE PRECASTER'S WRITTEN APPROVAL.
17. MINIMUM THICKNESS OF STRUCTURAL ELEMENTS INSTALLED IN OR UNDER PAVEMENT SHALL BE 6".

STATE OF LOUISIANA
THOMAS A. STEPHENS
License No. 15417
PROFESSIONAL ENGINEER
IN
CIVIL ENGINEERING
2/16/2012

	DATE	DESCRIPTION REVISION	BY
1	02/10/2012	NOTE #15 REVISION.	G.C.

STANDARD PLAN No.	DATED	SHT. No.
702-97	DEC. 6, 2010	1 OF 1

PRECAST DRAINAGE STRUCTURE (STRUCTURAL DETAILS)

ENGINEERING DIVISION
DEPARTMENT OF PUBLIC WORKS
CITY OF BATON ROUGE & PARISH OF EAST BATON ROUGE

DESIGNED	DRAWN	CHECKED	APPROVED
GLP	GLP	GLP	T. STEPHENS

PROJECT NO.	SHEET
12-CS-HC-0043	609

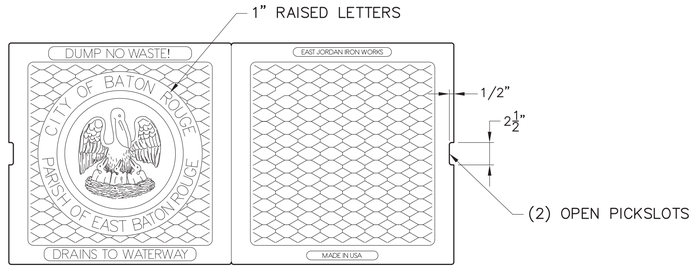

PLAN OF DUCTILE IRON COVER
SCALE: 1 1/2"=1'-0"

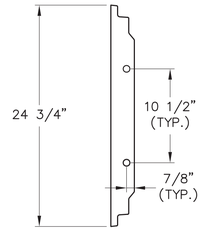

SIDE VIEW

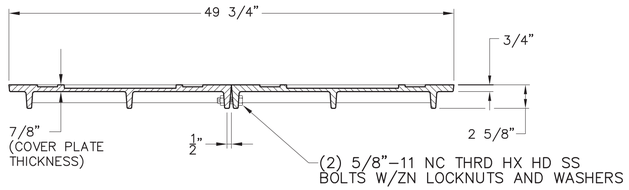

FRONT VIEW

EJIW PRODUCT #44300209
USF 5188 (ITEM 8015665 & 8015666)
OR APPROVED EQUAL

EJIW PRODUCT #44302030
USF 5188 (ITEM 8070063)
OR APPROVED EQUAL

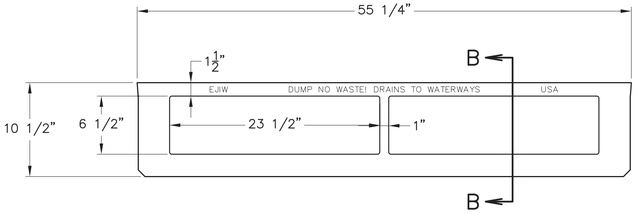

FRONT VIEW

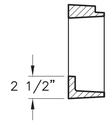

SECTION B-B

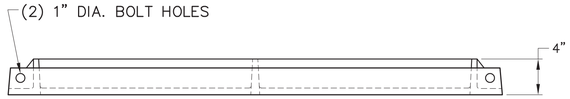

TOP VIEW

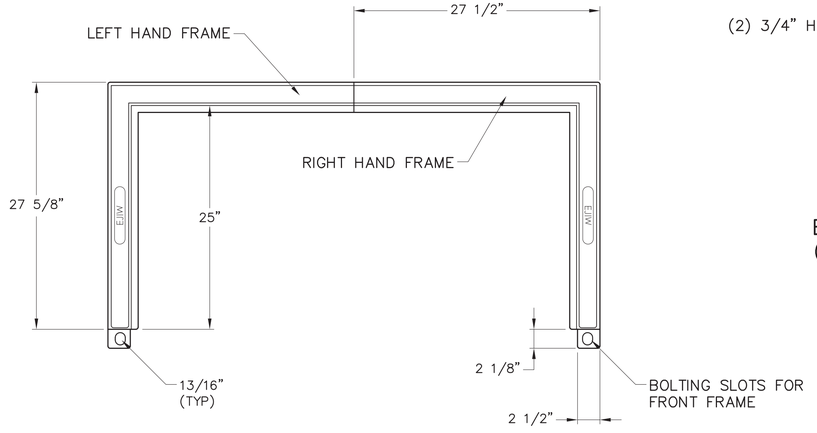

EJIW PRODUCT #44300016
USF 5188 (ITEM 8060020)
OR APPROVED EQUAL

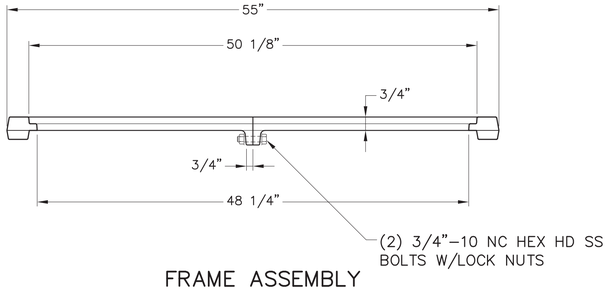

FRAME ASSEMBLY
SCALE: 1 1/2"=1'-0"

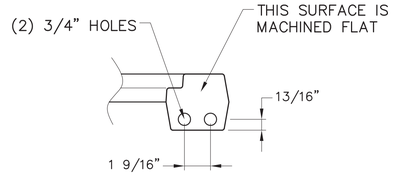

BOLT FLANGE DETAIL
(TYP, BOTH HALVES)

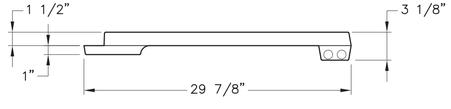

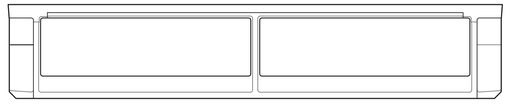

BACK VIEW
SCALE: 1 1/2"=1'-0"

* NOTES: WEIGHT OF DUCTILE IRON COVER = 314 LBS.
WEIGHT OF DUCTILE IRON FRAME = 128 LBS.
WEIGHT OF GREY IRON GRATE = 140 LBS.
* (WEIGHTS SHOWN ARE FOR EJIW PRODUCTS.
WEIGHTS OF APPROVED EQUAL PRODUCTS MAY VARY.)

GENERAL NOTE:

ALL CAST IRON FRAME, GRATES, AND COVERS SHALL BE TRAFFIC BEARING AND BE OF DOMESTIC ORIGIN OR COMPLY WITH SECTION 6-11. FRAME, GRATES, AND COVERS SHALL MEET OR EXCEED ALL REQUIREMENTS OF THE AASHTO DESIGNATION: M306 STANDARD SPECIFICATION FOR DRAINAGE, SEWER, UTILITY, AND RELATED CASTINGS.



DATE	DESCRIPTION REVISION	BY
3/28/12	UPDATE USF PRODUCT NUMBER.	G. L. P.
12/06/10	ADD NOTES FOR PRODUCT WEIGHTS.	G. L. P.
3/17/10	ADD USF PRODUCT NUMBER.	G. L. P.

STANDARD PLAN No.	DATED	SHT. No.
702-99	AUGUST 11, 2008	1 OF 3

FRAMES, GRATES AND COVERS FOR INLETS AND MANHOLES (TYPE 1)

ENGINEERING DIVISION
DEPARTMENT OF PUBLIC WORKS
CITY OF BATON ROUGE & PARISH OF EAST BATON ROUGE

DESIGNED	DRAWN	CHECKED	APPROVED
G. CHENG	G. VANNICE	G. CHENG	T. STEPHENS

PROJECT NO.	SHEET
12-CS-HC-0043	610

DETAILS OF WELDED & SEALED DRAIN GRATE

CONTINUOUS WELD FOR FULL DEPTH EACH BEARING BAR TO END BARS AND CROSS BARS.

BEARING BARS TO BE SET FLUSH ON GRATE FRAME.

WEIGHT OF DRAIN GRATE = 233 LBS. ± 5%

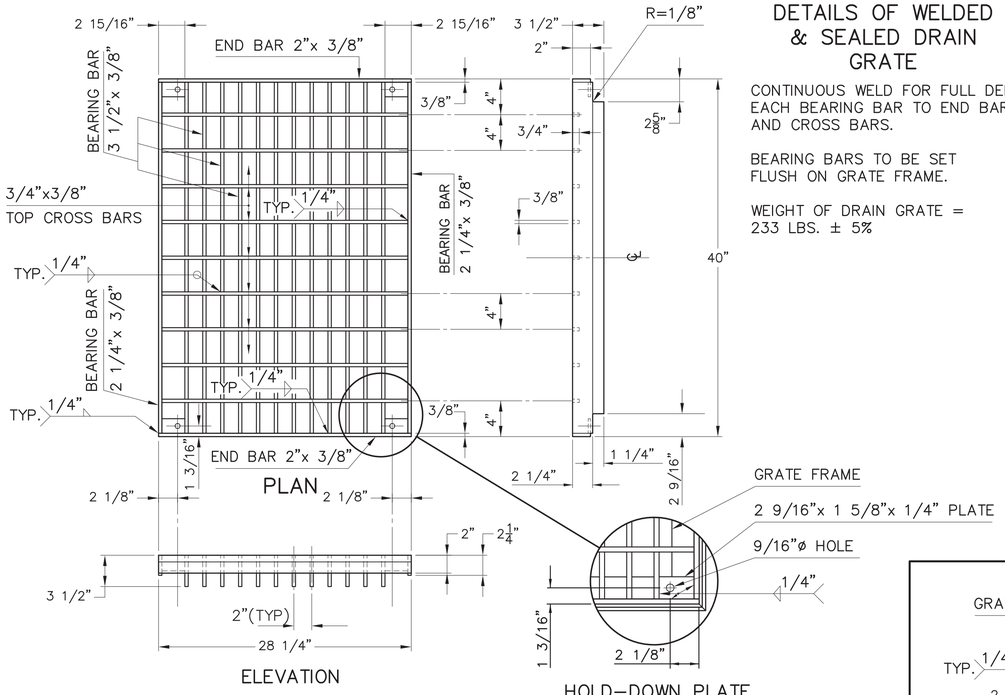

FABRICATED BAR
SCALE: 1 1/2"=1'-0"

DETAILS OF RIVETED RETICULINE DRAIN GRATE

CONTINUOUS WELD FOR FULL DEPTH EACH BEARING BAR TO END BARS.

BEARING BARS TO BE SET FLUSH ON GRATE FRAME.

CENTER TO CENTER OF BEARING BARS EQUALS 2 5/16" PLUS BEARING BAR THICKNESS.

WEIGHT OF DRAIN GRATE = 266 LBS. ± 5%

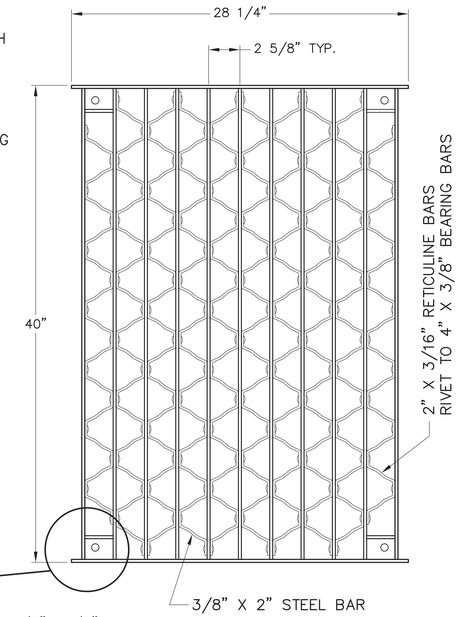

GRATE TOP VIEW

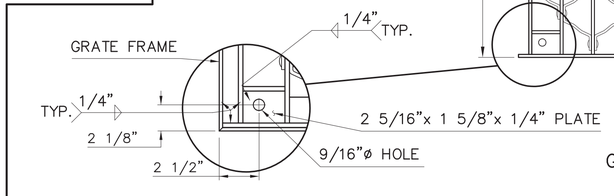

HOLD-DOWN PLATE

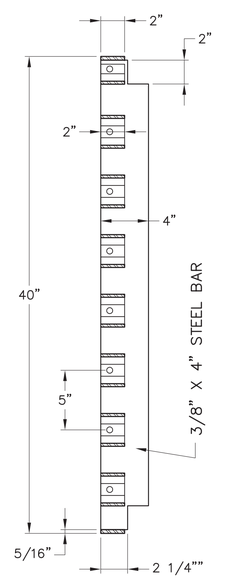

GRATE SECTION

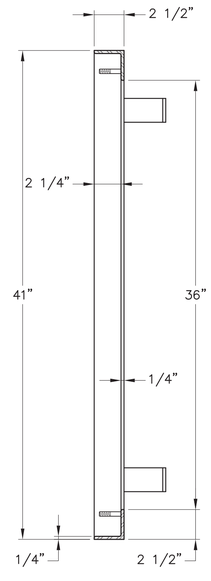

FRAME SECTION

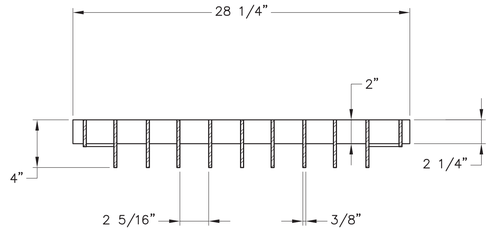

GRATE SECTION

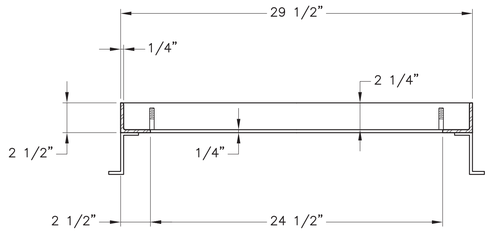

FRAME SECTION

RETICULINE GRATE AND FRAME
SCALE: 2"=1'-0"

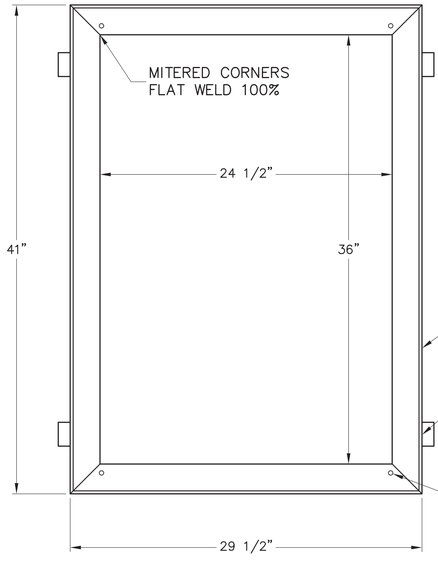

FRAME TOP VIEW

NOTE:
FRAME AND GRATE:
ASTM A36 STEEL, WELDED CONSTRUCTION. HOT DIP GALVANIZED AFTER FABRICATION.
(GALVANIZE PER ASTM A123)

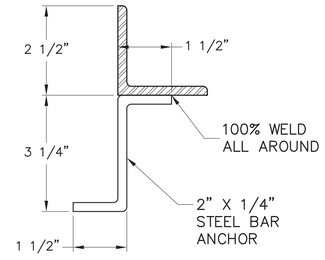

ANCHOR DETAIL

EJIW PRODUCT #44863061
USF 6672-6673
OR APPROVED EQUAL



STANDARD PLAN No.	DATED	SHT. No.
702-99	AUGUST 11, 2008	2 OF 3

FRAMES, GRATES AND COVERS FOR INLETS AND MANHOLES (TYPE 2)

DATE	DESCRIPTION	BY
3/28/12	ADD USF PRODUCT NUMBER.	G. L. P.

REVISION

ENGINEERING DIVISION
DEPARTMENT OF PUBLIC WORKS
CITY OF BATON ROUGE & PARISH OF EAST BATON ROUGE

DESIGNED	DRAWN	CHECKED	APPROVED
G. CHENG	G. VANNICE	G. CHENG	T. STEPHENS

EJIW PRODUCT #45775030, USF 6278 OR APPROVED EQUAL

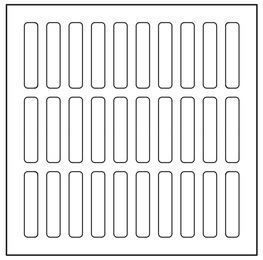

GRATE TOP VIEW

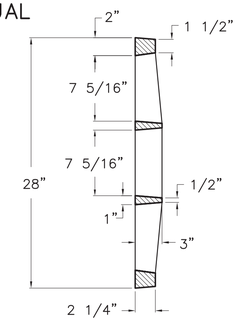

GRATE SECTION

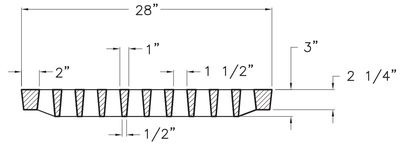

GRATE SECTION

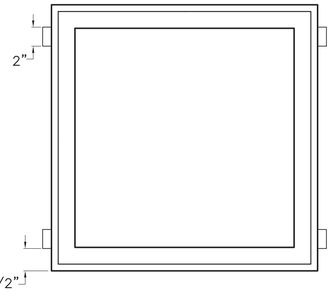

FRAME TOP VIEW

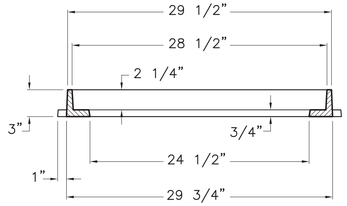

FRAME SECTION

"TYPE 3"
SCALE: 1-1/2"=1'-0"

EJIW PRODUCT #45775010
USF 4650
OR APPROVED EQUAL

EJIW PRODUCT #45913130, USF 6279 OR APPROVED EQUAL

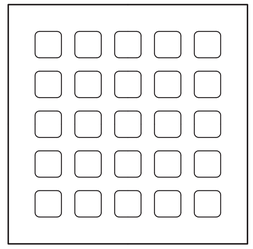

GRATE TOP VIEW

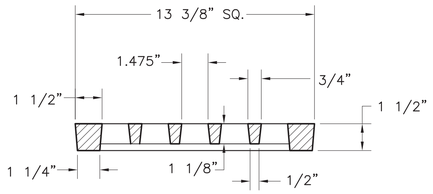

GRATE SECTION

"TYPE 4"
SCALE: 3"=1'-0"

DETAILS OF CAST IRON GRATE
WEIGHT OF CASTING = 38 LBS.

EJIW PRODUCT #43501030, USF 5685 OR APPROVED EQUAL

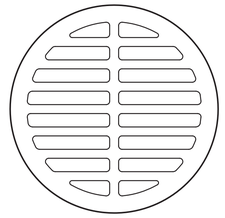

GRATE TOP VIEW

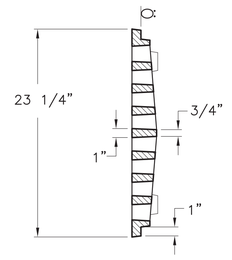

GRATE SECTION

Ø MACHINED SURFACE

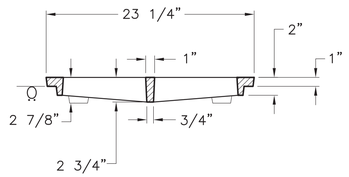

GRATE SECTION

"TYPE 5"
SCALE: 1-1/2"=1'-0"

EJIW PRODUCT #41886007 USF 1346 BZ BLT OR APPROVED EQUAL

PROJECT NO.	SHEET
12-CS-HC-0043	611

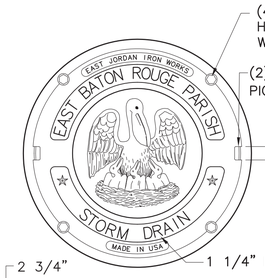

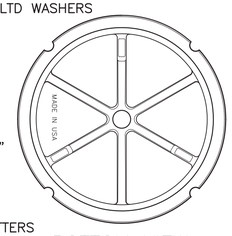

BOTTOM VIEW OF COVER

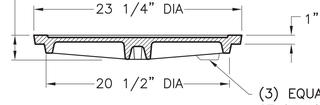

COVER SECTION

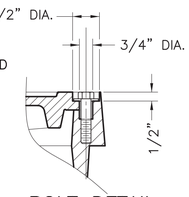

BOLT DETAIL

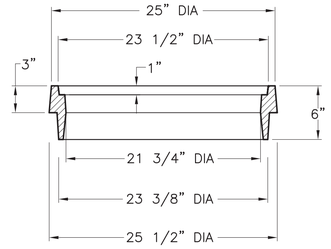

RING SECTION

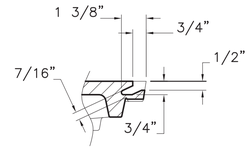

PICKHOLE DETAIL

"TYPE 6"
SCALE: 1-1/2"=1'-0"

EJIW PRODUCT #41301211, USF 678 BZ OR APPROVED EQUAL

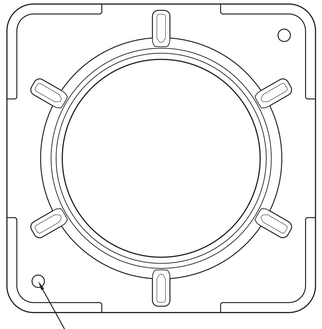

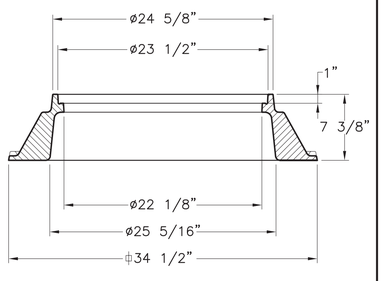

NOTE:
FRAME TO BE USED WITH TYPE 7 COVER.

"TYPE 9"
SCALE: 1-1/2"=1'-0"

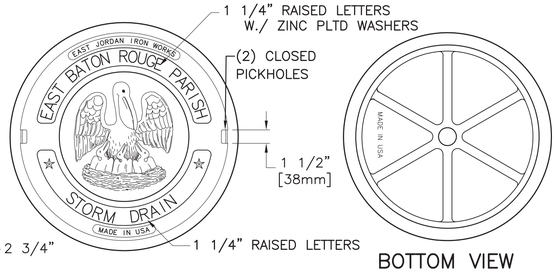

BOTTOM VIEW OF COVER

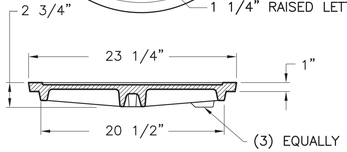

COVER SECTION

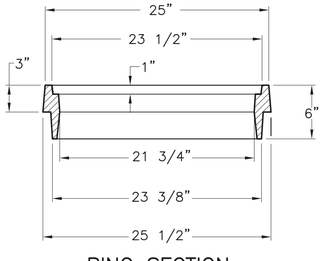

RING SECTION

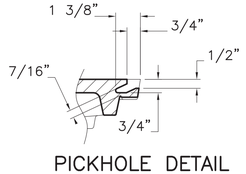

PICKHOLE DETAIL

EJIW PRODUCT #41886010
USF 1346 BZ
OR APPROVED EQUAL

"TYPE 7"
SCALE: 1-1/2"=1'-0"

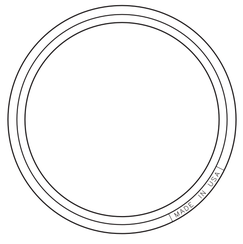

EJIW PRODUCT #41901110
USF 2337
OR APPROVED EQUAL

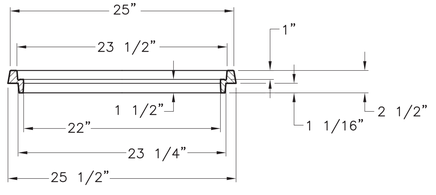

RING SECTION

"TYPE 8"
DETAILS OF MANHOLE
ADJUSTMENT RING
SCALE: 1 1/2"=1'-0"



3/28/12	ADD USF PRODUCT NUMBER.	G. L. P.
DATE	DESCRIPTION REVISION	BY

STANDARD PLAN No.	DATED	SHT. No.
702-99	AUGUST 11, 2008	3 OF 3

FRAMES, GRATES AND COVERS FOR INLETS AND MANHOLES

ENGINEERING DIVISION
DEPARTMENT OF PUBLIC WORKS
CITY OF BATON ROUGE & PARISH OF EAST BATON ROUGE

DESIGNED	DRAWN	CHECKED	APPROVED
G. CHENG	G. VANNICE	G. CHENG	T. STEPHENS

PROJECT NO.	SHEET
12-CS-HC-0043	612

Mulching

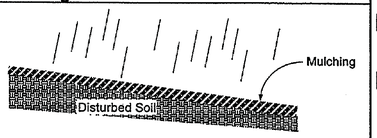

DESCRIPTION
Mulching is the application of a layer of chopped straw, hay or other material which is spread uniformly over barren areas to reduce the effects of erosion from rainfall. Types of mulch include organic materials, straw, wood chips, bark or other fibers. Mulch also comes in prepackaged forms, using straw, hay or other material with organic and inorganic binding systems.

PRIMARY USE
Mulch is used to temporarily and/or permanently stabilize clear or freshly seeded areas. It protects the soil from erosion and moisture loss by lessening the effects of wind, water, and sunlight. It also decreases the velocity of sheet flow, thereby reducing the volume of sediment-laden water flow leaving the mulched area.

APPLICATIONS
Mulch may be used on any construction-related disturbed area for surface protection including:
- Freshly seeded or planted areas,
- Areas at risk due to the time period being unsuitable for growing vegetation,
- Areas that are not conducive to seeding or planting.

DESIGN CRITERIA
Mulch may be used by itself or in combination with netting or other anchors to promote soil stabilization.

Several manufacturers provide an organic mulch with an attached netting to simplify installation. Installation should adhere to manufacturer's specifications and requirements.

- Choice of mulch depends largely on slope, climate, and soil type in addition to availability of different materials. Straw and hay are the recommended choices due to their availability and biodegradability.
- Mulch should be applied in an even and uniform manner where concentrated water flow is negligible.

Applications
Perimeter Control
Slope Protection
Sediment Trapping
Channel Protection
Temporary Stabilization
Permanent Stabilization
Waste Management
Housekeeping Practices

Targeted Constituents
- ● Sediment
- ○ Nutrients Toxic Materials
- ○ Oil & Grease
- ○ Floatable Materials
- ○ Other Construction Wastes

Implementation Requirements
- ◒ Capital Costs
- ◒ Maintenance
- ○ Training
- ○ Suitability for Slopes >5%

Legend
- ● Significant Impact
- ◒ Medium Impact
- ○ Low Impact
- ? Unknown or Questionable Impact

BMP
1

City of Baton Rouge
Parish of
East Baton Rouge

Department of Public Works

Mulching

- Application of straw or hay mulch should be approximately 2 tons dry per acre spread uniformly across the disturbed area. Other material should be applied such that 25% of the soil is visible through the mulch.
- For areas using straw mulch and the slope is greater than 3-5%, anchoring of the mulch with a Krimper Tool is required.

LIMITATIONS
Mulches are subject to removal by wind or water under severe climatic conditions. Mulches lower the soil temperature which may result in longer seed germination periods.

MAINTENANCE REQUIREMENTS
Mulched areas must be inspected on a weekly basis, and after significant (>0.5 inch) rainfall, for thin or bare spots caused by natural decomposition or weather related events. Mulch in high traffic areas should be replaced on a regular basis to maintain uniform protection.

BMP
1

Department of Public Works

Erosion Control Mats

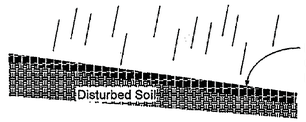

DESCRIPTION
An erosion control mat (ECM) is a geomembrane or biodegradable fabric placed over disturbed areas to limit the effects of erosion due to rainfall impact and runoff across barren soil. Erosion control mats are manufactured by a wide variety of vendors addressing a wide variety of conditions such as vegetation establishment, protection from heavy rainfall, and high velocity flow. Types of matting include organic (jute, straw) and synthetic (plastic and glass fiber) materials.

PRIMARY USE
Mats can provide both temporary and/or permanent stabilization for disturbed soil or barren areas. It is used for difficult to stabilize areas such as steep slopes, temporary or permanent drainage swales, embankments or high traffic (pedestrian) areas. Some mats are reusable, reducing the initial cost of the installation.

APPLICATIONS
Mats can be used on any construction-related disturbed area, but are particularly effective for erosion control of fine grained soils, and on short, steep slopes (such as stream banks) where erosion is high and growth of vegetation is slow.

DESIGN CRITERIA
A mat may be used by itself or in combination with netting or other anchors to promote soil stabilization. Choice of matting depends largely on slope, climate, soil type, and durability. Mats are usually installed according to the manufacturer's recommended guidelines. After appropriate installation, the matting should be checked for: uniform contact with the soil; security of the lap joints; and flushness of the staples with the ground.

Manufacturers information will verify acceptable applications for a particular product.

LIMITATIONS
Although matting is highly effective in controlling erosion, it may be less cost-effective than other BMPs for erosion control and it may require a

Applications
Perimeter Control
Slope Protection
Sediment Trapping
Channel Protection
Temporary Stabilization
Permanent Stabilization
Waste Management
Housekeeping Practices

Targeted Constituents
- ◒ Sediment
- ○ Nutrients Toxic Materials
- ○ Oil & Grease
- ○ Floatable Materials
- ○ Other Construction Wastes

Implementation Requirements
- ● Capital Costs
- ◒ Maintenance
- ◒ Training
- ◒ Suitability for Slopes >5%

Legend
- ● Significant Impact
- ◒ Medium Impact
- ○ Low Impact
- ? Unknown or Questionable Impact

BMP
2

City of Baton Rouge
Parish of
East Baton Rouge

Department of Public Works

Erosion Control Mats

contractor with considerable mat installation experience for installation.

MAINTENANCE REQUIREMENTS
Matted areas must be inspected on a weekly basis, and after significant (>0.5 inch) rainfall, for bare spots caused by weather related events. Missing or loosened matting must be replaced or re-anchored.

BMP
2

Department of Public Works

Vegetation

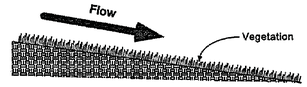

DESCRIPTION
Vegetation, as a Best Management Practice, is the sowing of annual grasses, small grains or legumes to provide interim and permanent vegetative stabilization for disturbed areas. Unless otherwise specified, Bermuda Grass is to be used for permanent seeding. Temporary stabilization may be achieved during winter by seeding with Rye Grass.

PRIMARY USE
Vegetation is used as a temporary or permanent stabilization technique for areas disturbed by construction but not protected by pavement, building or other structures. As a temporary control, vegetation is used to stabilize stockpiles and barren areas which are inactive for long periods of time. As a permanent control, grasses and other vegetation provide good protection for the soil along with some filtering for overland runoff. Subjected to acceptable runoff velocities, vegetation can provide a good method of permanent storm water management as well as a visual amenity to the site.

Other BMPs may be required to assist in the establishment of vegetation. These other techniques include erosion control matting, swales and dikes to direct flow around newly seeded areas and proper grading to limit runoff velocities during construction.

APPLICATIONS
Vegetative techniques can and should apply to every construction project with few exceptions. Vegetation effectively reduces erosion in swales, stock piles, berms, mild to medium slopes and along roadways. Vegetative strips can provide some protection when used as a perimeter control for utility and site development construction.

In many cases, the initial cost of temporary seeding may be high compared to tarps or covers for stockpiles or other barren areas subject to erosion yet inactive. This initial cost should be weighed with the amount of time the area is to remain inactive, since maintenance cost for vegetated areas is much less than most structural controls.

Applications
Perimeter Control
Slope Protection
Sediment Trapping
Channel Protection
Temporary Stabilization
Permanent Stabilization
Waste Management
Housekeeping Practices

Targeted Constituents
- ● Sediment
- ◒ Nutrients Toxic Materials
- ○ Oil & Grease
- ○ Floatable Materials
- ○ Other Construction Wastes

Implementation Requirements
- ◒ Capital Costs
- ◒ Maintenance
- ○ Training
- ● Suitability for Slopes >5%

Legend
- ● Significant Impact
- ◒ Medium Impact
- ○ Low Impact
- ? Unknown or Questionable Impact

BMP
3

City of Baton Rouge
Parish of
East Baton Rouge

Department of Public Works

Vegetation

DESIGN CRITERIA
Surface Preparation
- Interim or final grading must be completed prior to seeding, minimizing all steep slopes.
- Install all necessary erosion structures such as dikes, swales, diversions, etc., prior to seeding.
- Groove or furrow slopes steeper than 3:1 on the contour line before seeding.
- Provide 4-6 inches of topsoil over unsuitable soils.
- Seed-bed should be well pulverized, loose and uniform.

Plant Selection, Fertilization and Seeding
- Use only high quality, USDA certified seed.
- For permanent vegetative cover during the period from March to August (inclusive) use hulled Bermuda Grass applied at 10 - 12 pounds per acre.
- For permanent vegetative cover during the period from September to February (inclusive) use unhulled Bermuda Grass applied at 15 - 20 pounds per acre.
- For temporary stabilization on disturbed areas or stockpiles, use Rye Grass seed applied at 40 - 50 pounds per acre.
- Fertilizer shall be applied according to the manufacturer's recommendation with proper spreader equipment. Typical application rate for 10-10-10 grade fertilizer is 700-1000 pounds per acre. DO NOT OVER APPLY FERTILIZER.
- If hydro-seeding is used, do not mix seed and fertilizer more than 30 minutes before application.
- Evenly apply seed using cyclone seeder, seed drill, cultipacker or hydroseeder.
- Provide adequate water to aid in establishment of vegetation.
- Use appropriate mulching techniques where necessary.

LIMITATIONS
Vegetation is not appropriate for areas subjected to heavy pedestrian or vehicular traffic. As a temporary technique, vegetation may be costly when compared to other techniques.
Vegetation is not appropriate for rock, gravel or coarse grained soils unless 4 to 6 inches of topsoil is applied.

MAINTENANCE REQUIREMENTS
Protect newly seeded areas from excessive runoff and traffic until vegetation is established (mulching may be necessary). A watering and fertilizing schedule will be required as part of the SWPPP to assist in the establishment of the vegetation.

BMP
3

Department of Public Works

DATE	DESCRIPTION REVISIONS	BY

THOMAS A. STEPHENS
License No. 19417
PROFESSIONAL ENGINEER
IN
CIVIL ENGINEERING
2/16/2012

STANDARD PLAN NO.	DATED	SHEET NO.
903–01	FEBRUARY 25, 2008	1 OF 11

STORM WATER POLLUTION PREVENTION PLAN BEST MANAGEMENT PRACTICES

ENGINEERING DIVISION
DEPARTMENT OF PUBLIC WORKS
CITY OF BATON ROUGE & PARISH OF EAST BATON ROUGE

DESIGNED	DRAWN	CHECKED	APPROVED
G. CHENG	G. VANNICE	G. CHENG	T. STEPHENS

903–01

PROJECT NO.	SHEET
12-CS-HC-0043	613

Silt Fence

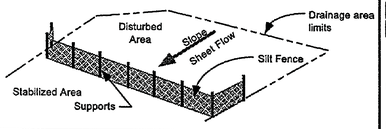

Applications
- Perimeter Control
- Slope Protection
- Sediment Trapping
- Channel Protection
- Temporary Stabilization
- Permanent Stabilization
- Waste Management
- Housekeeping Practices

Targeted Constituents
- ● Sediment
- ○ Nutrients Toxic Materials
- ○ Oil & Grease
- ◒ Floatable Materials
- ○ Other Construction Wastes

Implementation Requirements
- ◒ Capital Costs
- ● Maintenance
- ○ Training
- ◒ Suitability for Slopes >5%

Legend
- ● Significant Impact
- ◒ Medium Impact
- ○ Low Impact
- ? Unknown or Questionable Impact

BMP
4

City of Baton Rouge Parish of East Baton Rouge

Department of Public Works

DESCRIPTION
A silt fence consists of geotextile fabric supported by poultry netting or other backing stretched between either wooden or metal posts with the lower edge of the fabric securely embedded in the soil. The fence is typically located downstream of disturbed areas to intercept runoff in the form of sheet flow. Silt fence provides both filtration and time for sedimentation to reduce sediment and it reduces the velocity of the runoff. Properly designed silt fence is economical since it can be re-located during construction and re-used on other projects.

PRIMARY USE
Silt fence is normally used as perimeter control located downstream of disturbed areas. It is only feasible for non-concentrated, sheet flow conditions.

APPLICATIONS
Silt fence is an economical means to treat overland, non-concentrated flows for all types of projects. Silt fences are used as perimeter control devices for both site developments and linear (roadway) type projects. They are most effective with coarse to silty soil types. Due to the potential of clogging, silt fence should not be used with clay soil types.

In order to reduce the length of silt fence, it should be placed adjacent to the down slope side of the construction activities.

DESIGN CRITERIA
- Fences are to be constructed along a line of constant elevation (along a contour line) where possible.
- Maximum slope adjacent to the fence is 1:1.
- Maximum distance of flow to silt fence should be 200 feet or less.
- Maximum concentrated flow to silt fence shall be 1 CFS per 20 feet of fence.
- If 50% or less of soil, by weight, passes the U.S. Standard sieve No. 200, select the equivalent opening size (E.O.S.) to retain 85% of the soil.
- Maximum equivalent opening size shall be 70 (#70 sieve).

Straw Bale Dike

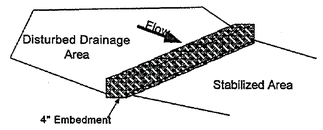

Applications
- Perimeter Control
- Slope Protection
- Sediment Trapping
- Channel Protection
- Temporary Stabilization
- Permanent Stabilization
- Waste Management
- Housekeeping Practices

Targeted Constituents
- ◒ Sediment
- ○ Nutrients Toxic Materials
- ○ Oil & Grease
- ◒ Floatable Materials
- ○ Other Construction Wastes

Implementation Requirements
- ◒ Capital Costs
- ● Maintenance
- ○ Training
- ◒ Suitability for Slopes >5%

Legend
- ● Significant Impact
- ◒ Medium Impact
- ○ Low Impact
- ? Unknown or Questionable Impact

BMP
5

City of Baton Rouge Parish of East Baton Rouge

Department of Public Works

DESCRIPTION
A straw bale dike is a temporary barrier constructed of straw bales anchored with wood posts, that is used to intercept sediment-laden runoff generated by small disturbed areas. The straw bales can serve as both a filtration device and a dam/dike device to treat and redirect flow. Bales can consist of hay or straw in which straw is defined as best quality straw from wheat, oats or barley, free of weed and grass seed and hay is defined as straw which includes weed and grass seed.

PRIMARY USE
A straw bale dike is used to trap sediment-laden storm runoff from small drainage areas with relatively level grades, allowing for reduction of velocity thereby causing sediment to settle out.

APPLICATIONS
Straw bale dikes are used to treat flow after it leaves a disturbed area on a relatively small (<1 acre) site. Due to the limited life of the straw bale, it is cost effective for small projects of a short duration. The limited weight and strength of the straw bale makes it suitable for small, flat (< 2 percent slope) contributing drainage areas. Due to the problems with straw degradation and the lack of uniform quality in straw bales, their use is discouraged except for small residential applications.

Straw bales can also be used as check dams (see Check Dam BMP S-7) for small watercourses such as interceptor swales and borrow ditches. Due to the problems in securely anchoring the bales, only small watercourses can effectively use straw bale check dams.

DESIGN CRITERIA
- Straw bale dikes are to be constructed along a line of constant elevation (along a contour line).
- Straw bale dikes are suitable only for treating sheet flows across grades of 2% or flatter.
- Maximum contributing drainage area shall be 0.25 acre per 100 linear feet of dike.
- Maximum distance of flow to dike should be 100 feet or less.

Triangular Sediment Filter Dike

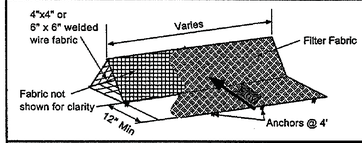

Applications
- Perimeter Control
- Slope Protection
- Sediment Trapping
- Channel Protection
- Temporary Stabilization
- Permanent Stabilization
- Waste Management
- Housekeeping Practices

Targeted Constituents
- ● Sediment
- ○ Nutrients Toxic Materials
- ○ Oil & Grease
- ◒ Floatable Materials
- ○ Other Construction Wastes

Implementation Requirements
- ◒ Capital Costs
- ◒ Maintenance
- ○ Training
- ◒ Suitability for Slopes >5%

Legend
- ● Significant Impact
- ◒ Medium Impact
- ○ Low Impact
- ? Unknown or Questionable Impact

BMP
6

City of Baton Rouge Parish of East Baton Rouge

Department of Public Works

DESCRIPTION
A Triangular Sediment Filter Dike is a self contained silt fence consisting of filter fabric wrapped around welded wire fabric shaped into a triangular cross section. While similar in use to a silt fence, the dike is reusable, sturdier, transportable and can be used on paved areas or in situations where it is impractical to install embedded posts for support.

PRIMARY USE
Triangular filter dikes are used in place of silt fence, treating sediment flow at the perimeter of construction areas and at the perimeter of the site. Also, the dikes can serve as stream protection devices by preventing sediment from entering the streams or as check dams in small swales.

Triangular sediment filter dikes are especially useful for construction areas surrounded by pavement, such as roadways, taxiways, ramps, etc., where silt fence or hay bale installation is Since they can be anchored without penetration, pavement damage can be minimized.

APPLICATIONS
Triangular dikes are used to provide perimeter control by detaining sediment on a disturbed site with drainage that would otherwise flow onto adjacent areas. Triangular dikes also serve as sediment trapping devices when used in areas of sheet flow across disturbed areas or are placed along stream banks to prevent sediment-laden sheet flow from entering the stream. The dikes can be subjected to more concentrated flows and a higher flowrate than silt fence.

DESIGN CRITERIA
- Dikes are to be installed along a line of constant elevation (along a contour line).
- Maximum slope perpendicular to the dike is 1:1.
- Maximum drainage flow to the dike shall be 11 CFS per 100 linear feet of dike.
- Maximum distance of flow to dike should be 200 feet or less.
- Maximum concentrated flow to dike shall be 1 CFS.

Silt Fence

- Minimum equivalent opening size shall be 100 (#100 sieve).
- If 85% or more of soil, by weight, passes the U.S. Standard sieve No. 200, silt fences shall not be used due to potential clogging.
- Sufficient room for the operation of sediment removal equipment shall be provided between the silt fence and other obstructions in order to properly maintain the fence.
- The ends of the fence shall be turned upstream to prevent bypass of stormwater.

LIMITATIONS
Minor ponding will likely occur at the upstream side of the silt fence resulting in minor localized flooding.

Fences which are constructed in swales or low areas subject to concentrated flow may be overtopped resulting in failure of the filter fence. Silt fences subject to areas of concentrated flow (waterways with flows > 1 cfs) are not acceptable.

Silt fence can interfere with construction operations, therefore planning of access routes onto the site is critical.

Silt fence can fail structurally under heavy storm flows, creating maintenance problems and reducing the effectiveness of the system.

MAINTENANCE REQUIREMENTS
Inspections should be made on a weekly basis, especially after large storm events. If the fabric becomes clogged, it should be cleaned or if necessary, replaced.

Sediment should be removed when it reaches approximately one-half the height of the fence.

BMP
4

Department of Public Works

Straw Bale Dike

- Dimensions for individual bales shall be 30 inches minimum length, 18 inches minimum height, 24 inches minimum width and shall weigh no less than 50 pounds when dry.
- Each straw bale shall be placed into an excavated trench having a depth of 4 inches and a width just wide enough to accommodate the bales themselves.
- Straw bales shall be installed in such a way that there is no space between bales
- Individual bales shall be held in place by at least two wood stakes driven a minimum distance of 6 inches below the 4" excavated trench to undisturbed ground, with the first stake driven at an angle toward the previously installed bale.
- The ends of the dike shall be turned upgrade to prevent bypass of stormwater.
- Place bales on sides such that bindings are not buried.

LIMITATIONS
Due to a short effective life caused by biological decomposition, straw bales must be replaced after a period of no more than 3 months. During the wet and warm seasons, however, they must be replaced more frequently as is determined by periodic inspections for structural integrity.

Straw bale dikes are not recommended for use with concentrated flows of any kind except for small check flows in which they can serve as a check dam.

The effectiveness of straw bales in reducing sediment is very limited. Improperly maintained, straw bales can have a negative impact on the water quality of the runoff.

MAINTENANCE REQUIREMENTS
Straw bales shall be replaced if there are signs of degradation such as straw located downstream from the bales, structural deficiencies due to rotting straw in the bale or other signs of deterioration. Sediment should be removed from behind the bales when it reaches a depth of approximately 6 inches.

BMP
5

Department of Public Works

Triangular Sediment Filter Dike

- If 50% or less of soil, by weight, passes the U.S. Standard sieve No. 200, select the equivalent opening size (E.O.S.) to retain 85% of the soil.
- Maximum equivalent opening size shall be 70 (#70 sieve).
- Minimum equivalent opening size shall be 100 (#100 sieve).
- If 85% or more of soil, by weight, passes the U.S. Standard sieve No. 200, triangular sediment dike shall not be used due to clogging.
- Sufficient room for the operation of sediment removal equipment shall be provided between the dike and other obstructions in order to properly remove sediment.
- The ends of the dike shall be turned upgrade to prevent bypass of stormwater.

LIMITATIONS
Ponding will likely occur directly adjacent to the dike which may possibly cause flooding.

Triangular sediment filter dikes are not effective for conditions which include substantial concentrated flows or when they are not constructed along a contour line due to the potential for flow concentration and overtopping.

MAINTENANCE REQUIREMENTS
Inspections should be made on a weekly basis, especially after large (> 0.5 inches) storm events. If the fabric becomes clogged, it should be cleaned or if necessary, replaced.

Sediment should be removed when it reaches approximately 6 inches in depth. In addition, inspections should be made on a regular basis to check the structural integrity of the dike. If structural deficiencies are found, the dike should be immediately repaired or replaced.

As with silt fence, integrity of the filter fabric is important to the effectiveness of the dike. Overlap between dike sections must be checked on a regular basis and repaired if deficient.

BMP
6

Department of Public Works

STATE OF LOUISIANA
THOMAS A. STEPHENS
License No. 19417
PROFESSIONAL ENGINEER
IN
CIVIL ENGINEERING
2/14/2013

DATE	DESCRIPTION REVISIONS	BY

STANDARD PLAN NO.	DATED	SHEET NO.
903–01	FEBRUARY 25, 2008	2 OF 11

STORM WATER POLLUTION PREVENTION PLAN BEST MANAGEMENT PRACTICES

ENGINEERING DIVISION
DEPARTMENT OF PUBLIC WORKS
CITY OF BATON ROUGE & PARISH OF EAST BATON ROUGE

DESIGNED	DRAWN	CHECKED	APPROVED
G. CHENG	G. VANNICE	G. CHENG	T. STEPHENS

903–01

PROJECT NO.	SHEET
12-CS-HC-0043	614

Diversion Dike

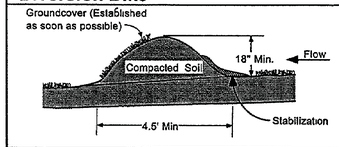

Applications
- Perimeter Control
- Slope Protection
- Sediment Trapping
- Channel Protection
- Temporary Stabilization
- Permanent Stabilization
- Waste Management
- Housekeeping Practices

Targeted Constituents
- ● Sediment
- ○ Nutrients Toxic Materials
- ○ Oil & Grease
- ◒ Floatable Materials
- ◒ Other Construction Wastes

Implementation Requirements
- ◒ Capital Costs
- ◒ Maintenance
- ○ Training
- ● Suitability for Slopes >5%

Legend
- ● Significant Impact
- ◒ Medium Impact
- ○ Low Impact
- ? Unknown or Questionable Impact

BMP 7

City of Baton Rouge Parish of East Baton Rouge

Department of Public Works

DESCRIPTION
A diversion dike is a compacted soil mound which redirects runoff to a desired location The dike is typically stabilized with natural grass for low velocities or with stone or erosion control mats for higher velocities.

PRIMARY USE
The diversion dike is normally used to intercept offsite flow upstream of the construction area and direct the flow around the disturbed soils. It can also be used downstream of the construction area to direct flow into a sediment reduction device such as a sediment basin or protected inlet. The diversion dike serves the same purpose and, based on the topography of the site, can be used in combination with an interceptor swale.

APPLICATIONS
By intercepting runoff before it has the chance to cause erosion, diversion dikes are very effective in reducing erosion at a reasonable cost. They are applicable to a large variety of projects including site developments and linear projects such as roadways and pipeline construction. Diversion dikes are normally used as perimeter controls for construction sites with large amounts of offsite flow from neighboring properties. Used in combination with swales, the diversion dike can be quickly installed with a minimum of equipment and cost, using the swale excavation as the dike. No sediment removal technique is required if the dike is properly stabilized and the runoff is intercepted prior to crossing disturbed areas.

Significant savings in structural controls can be realized by using diversion dikes to direct sheet flow to a central area such as a sediment basin or other sediment reduction structure if the runoff crosses disturbed areas.

DESIGN CRITERIA
- The maximum contributing drainage area should be 10 acres or
- Maximum depth of flow at the dike shall be 1 foot for 2 year design storm.
- The maximum width of the flow at the dike shall be 20 feet.
- Side slopes of the diversion dike shall be 3:1 or flatter.

Interceptor Swale

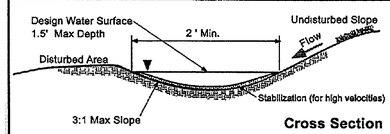

Cross Section

Applications
- Perimeter Control
- Slope Protection
- Sediment Trapping
- Channel Protection
- Temporary Stabilization
- Permanent Stabilization
- Waste Management
- Housekeeping Practices

Targeted Constituents
- ● Sediment
- ○ Nutrients Toxic Materials
- ○ Oil & Grease
- ● Floatable Materials
- ◒ Other Construction Wastes

Implementation Requirements
- ◒ Capital Costs
- ◒ Maintenance
- ○ Training
- ● Suitability for Slopes >5%

Legend
- ● Significant Impact
- ◒ Medium Impact
- ○ Low Impact
- ? Unknown or Questionable Impact

BMP 8

City of Baton Rouge Parish of East Baton Rouge

Department of Public Works

DESCRIPTION
An interceptor swale is a small v-shaped or parabolic channel which collects runoff and directs it to a desired location. It can either have a natural grass lining or depending on slope and design velocity, a protective lining of erosion matting, stone or concrete.

PRIMARY USE
The interceptor swale can either be used to direct sediment laden flow from disturbed areas into a controlled outlet or to direct 'clean' runoff around disturbed areas. Since the swale is easy to install during early grading operations, it can serve as the first line of defense in reducing runoff across disturbed areas. As a method of reducing runoff across the disturbed construction area, it reduces the requirements of structural measures to capture sediment from runoff since the flow is reduced. By intercepting sediment laden flow downstream of the disturbed area, runoff can be directed into a sediment basin or other BMP for sedimentation as opposed to long runs of silt fence, straw bales or other filtration method.

Based on site topography, swales can be effectively used in combination with diversion dikes.

APPLICATIONS
Common applications for interceptor swales include roadway projects, site development projects with substantial offsite flow impacting the site and sites with a large area(s) of disturbance. It can be used in conjunction with diversion dikes to intercept flows. Temporary swales can be used throughout the project to direct flows away from staging, storage and fueling areas along with specific areas of construction. Note that runoff which crosses disturbed areas or is directed into unstabilized swales must be routed into a treatment BMP such as a sediment basin.

Grass lined swales are an effective permanent stabilization technique. The grass effectively filters both sediment and other pollutants while reducing velocity.

Stabilized Construction Entrance

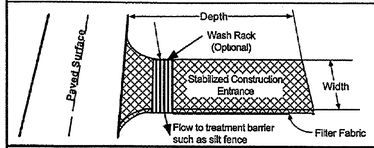

Applications
- Perimeter Control
- Slope Protection
- Sediment Trapping
- Channel Protection
- Temporary Stabilization
- Permanent Stabilization
- Waste Management
- Housekeeping Practices

Targeted Constituents
- ◒ Sediment
- ○ Nutrients Toxic Materials
- ○ Oil & Grease
- ○ Floatable Materials
- ○ Other Construction Wastes

Implementation Requirements
- ● Capital Costs
- ◒ Maintenance
- ○ Training
- ○ Suitability for Slopes >5%

Legend
- ● Significant Impact
- ◒ Medium Impact
- ○ Low Impact
- ? Unknown or Questionable Impact

BMP 9

City of Baton Rouge Parish of East Baton Rouge

Department of Public Works

DESCRIPTION
A stabilized construction entrance consists of a pad consisting of gravel, crushed stone, recycled concrete or other rock like material on top of geotextile filter cloth to facilitate the wash down and removal of sediment and other debris from construction equipment prior to exiting the construction site. For added effectiveness, a wash rack area can be incorporated into the design to further reduce sediment tracking. For long term projects, cattle guards or other type of permanent rack system can be used in conjunction with a wash rack. This directly addresses the problem of silt and mud deposition in roadways used for construction site access.

PRIMARY USE
Stabilized construction entrances are used primarily for sites in which significant truck traffic occurs on a daily basis. It reduces the need to remove sediment from streets. If used properly, it also directs the majority of traffic to a single location, reducing the number and quantity of disturbed areas on the site and providing protection for other structural controls through traffic control.

APPLICATIONS
Stabilized construction entrances are a required part of the erosion control plan for all site developments larger than 5 acres and a recommended practice for all construction sites. It is not suitable for long, linear projects. If possible, small entrances should be incorporated into small lot construction due to the large percentage of disturbed area on the site and the high potential for offsite tracking of silt and mud.

DESIGN CRITERIA
- Stabilized construction entrances are to be constructed such that drainage across the entrance is directed to a controlled, stabilized outlet on site with provisions for storage
- The entrance must be properly graded so that storm water is not allowed to leave the site and enter roadways.
- Minimum width of entrance shall be 15 feet, but in no case shall the width be less than that of the entry way to be used.

Diversion Dike

- Minimum width of the embankment at the top shall be 2 feet.
- Minimum embankment height shall be 18 inches as measured from the toe of slope on the upgrade side of the berm
- For velocities less than 6 feet per second, the minimum stabilization for the dike and adjacent flow areas is grass, erosion control mats or mulch. For velocities greater than 6 feet per second, stone stabilization or high velocity erosion control mats should be used. Velocities greater than 8 feet per second must be approved by the local jurisdiction.
- The dikes shall remain in place until all disturbed areas which are protected by the dike are permanently stabilized unless other controls are put into place to protect the disturbed area.
- Flow line at dike shall have a positive grade to drain to a controlled outlet.

LIMITATIONS
Compacted earth dikes require stabilization immediately upon placement so as not to contribute to the problem they are addressing.

The diversion dikes can be a hinderance to construction equipment moving on the site, therefore their locations must be carefully planned prior to installation.

MAINTENANCE REQUIREMENTS
Dikes must be inspected on a weekly basis and after each significant (>0.5 inch) rainfall to determine if silt is building up behind the dike, or if erosion is occurring on the face of the dike. Silt shall be removed in a timely manner. If erosion is occurring on the face of the dike, the slopes of the face shall either be stabilized through mulch or seeding or the slopes of the face shall be reduced.

BMP 7

Department of Public Works

Interceptor Swale

DESIGN CRITERIA
- Maximum depth of flow in the swale shall be 1.5 feet based on a 2 year design storm peak flow. Positive overflow must be provided to accommodate larger storms.
- Side slopes of the swale shall be 3:1 or flatter.
- Minimum design channel freeboard shall be 6 inches.
- The minimum required channel stabilization for grades less than 2 percent and velocities less than 6 feet per second may be grass, erosion control mats or mulching. For grades in excess of 2 percent, or velocities exceeding 6 feet per second, stabilization in the form of high velocity erosion mats, a three inch layer of crushed stone or rip rap is required. Velocities greater than 8 feet per second will require approval by the PROGRAM MANAGER.
- Check dams can be used to reduce velocities in steep swales. See check dam BMP fact sheet for design criteria.
- Interceptor swales must be designed for flow capacity based on Manning's Equation to ensure a proper channel section. Alternate channel sections may be used when properly designed and accepted.
- Consideration must be given to the possible impact that any swale may have on upstream or downstream conditions.
- Swales must maintain positive grade to an acceptable outlet.

LIMITATIONS
Interceptor swales must be stabilized quickly upon excavation so as not to contribute to the erosion problem they are addressing.

Swales may be unsuitable to the site conditions (too flat or steep).

Limited flow capacity for temporary swales. For permanent swales, the 1.5 feet maximum depth can be increased as long

MAINTENANCE REQUIREMENTS
Inspection must be made weekly and after each significant (0.5" or greater) rain event to locate and repair any damage to the channel or to clear debris or other obstructions so as not to diminish flow capacity. Damage from storms or normal construction activities such as tire ruts or disturbance of swale stabilization shall be repaired as soon as practical.

BMP 8

Department of Public Works

Stabilized Construction Entrance

- Minimum depth of entrance shall be 8 inches for the entire length of the control.
- Minimum dimensions for the entrance shall be as follows:

Tract Area	Avg. Lot Depth	Min. Width of Entrance	Min. Depth of Entrance
< 1 Acre	100 feet	15 feet	20 feet
< 5 Acres	200 feet	20 feet	30 feet
< 10 Acres	> 200 feet	20 feet	40 feet
> 10 Acres	> 200 feet	25 feet	50 feet

LIMITATIONS
Selection of the construction entrance location is critical in that to be effective, it must be used exclusively.

Stabilized entrances are rather expensive considering that it must be installed in combination with one or more other sediment control techniques, but it may be cost effective compared to labor intensive street cleaning.

MAINTENANCE REQUIREMENTS
Inspections should be made on a regular basis and after large storm events in order to ascertain whether or not sediment and pollution are being effectively detained on site.

When sediment has substantially clogged the void area between the rocks, the aggregate mat must be washed down or replaced.

Periodic re-grading and top dressing with additional stone must be done to keep the efficiency of the entrance from diminishing.

BMP 9

Department of Public Works



STANDARD PLAN NO.	DATED	SHEET NO.
903–01	FEBRUARY 25, 2008	3 OF 11

STORM WATER POLLUTION PREVENTION PLAN BEST MANAGEMENT PRACTICES

ENGINEERING DIVISION
DEPARTMENT OF PUBLIC WORKS
CITY OF BATON ROUGE & PARISH OF EAST BATON ROUGE

DESIGNED	DRAWN	CHECKED	APPROVED
G. CHENG	G. VANNICE	G. CHENG	T. STEPHENS

DATE	DESCRIPTION REVISIONS	BY

903–01

PROJECT NO.	SHEET
12-CS-HC-0043	615

Check Dams

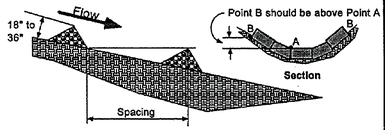

DESCRIPTION
Check dams are small barriers consisting of straw bales, rock, or earth berms placed across a drainage swale or ditch. They reduce the velocity of small concentrated flows, provide a limited barrier for sediment and help disperse concentrated flows, reducing potential erosion.

PRIMARY USE
Check dams are used for long drainage swales or ditches in which permanent vegetation may not be established and erosive velocities are present. They are typically used in conjunction with other techniques such as inlet protection, rip rap or other sediment reduction techniques. Check dams provide limited treatment. They are more useful in reducing flow to acceptable levels for other techniques.

APPLICATIONS
Check dams are typically used early in construction in swales for long linear projects such as roadways. They can also be used in short swales with a steep slope to reduce unacceptable velocities.

DESIGN CRITERIA
- Check dams should be placed at a distance and height to allow small pools to form between each one. Typically, dam height should be between 18" and 36". Dams should be spaced such that the top of the downstream dam should be at the same elevation as the toe of the upstream dam.
- See design criteria for straw bales, sand bag berms, etc. for specific criteria. Maximum allowable flow shall be based on the specific technique utilized and the velocity of flow.
- Major flows (greater than 2 year design storm) must pass the check dam without causing excessive upstream flooding.
- Check dams should be used in conjunction with other sediment reduction techniques prior to releasing flow offsite.

Applications
Perimeter Control
Slope Protection
Sediment Trapping
Channel Protection
Temporary Stabilization
Permanent Stabilization
Waste Management
Housekeeping Practices

Targeted Constituents
- ◒ Sediment
- ○ Nutrients Toxic Materials
- ○ Oil & Grease
- ◒ Floatable Materials
- ○ Other Construction Wastes

Implementation Requirements
- ◒ Capital Costs
- ● Maintenance
- ○ Training
- ◒ Suitability for Slopes >5%

Legend
- ● Significant Impact
- ◒ Medium Impact
- ○ Low Impact
- ? Unknown or Questionable Impact

BMP
10

City of Baton Rouge
Parish of
East Baton Rouge

Department of Public Works

Dust Control BMP

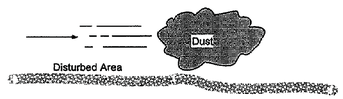

DESCRIPTION
Dust control measures are used to stabilize soil from wind erosion, and reduce dust generated by construction activities. Dust which settles on surfaces both on-site and off-site may be washed by storm water into waterways.

APPLICATIONS
- Clearing and grading activities
- Construction vehicles traffic on unpaved roads
- Drilling and blasting activities
- Sediment tracking onto paved roads
- Soil and debris storage piles
- Batch drop from front end loaders
- Areas with unstabilized soil

DESIGN CRITERIA
- Schedule construction activities to minimize the area where, and time period when soils are exposed.
- Quickly stabilize exposed soils using vegetation, mulching, spray-on adhesives, calcium chloride, sprinkling, and stone/gravel layering.
- Identify and stabilize key access points prior to commencement of construction.
- Minimizing the impact of dust by anticipating the direction of prevailing winds.
- Direct most construction traffic to stabilize roadways within the project site.

LIMITATIONS
- Watering prevents dust only for a short period and should be applied daily (or more often) to be effective. Overwatering may cause a contaminated erosion.
- Oils should not be used for dust control because it may migrate into drainageway and/or seep into the soil.
- Certain chemically-treated subgrades may make soil water repellent, increasing runoff.

Applications
Perimeter Control
Slope Protection
Sediment Trapping
Channel Protection
Temporary Stabilization
Permanent Stabilization
Waste Management
Housekeeping Practices

Targeted Constituents
- ◒ Sediment
- ◒ Nutrients Toxic Materials
- ○ Oil & Grease
- ◒ Floatable Materials
- ◒ Other Construction Wastes

Implementation Requirements
- ◒ Capital Costs
- ◒ Maintenance
- ◒ Training
- Suitability for Slopes >5%

Legend
- ● Significant Impact
- ◒ Medium Impact
- ○ Low Impact
- ? Unknown or Questionable Impact

BMP
11

City of Baton Rouge
Parish of
East Baton Rouge

Department of Public Works

Inlet Protection

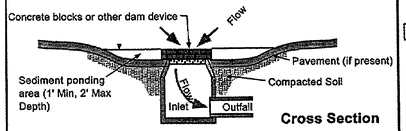

DESCRIPTION
Inlet protection consists of a variety of methods of intercepting sediment at low point inlets through the use of stone, filter fabric and other materials. This is normally located at the inlet, providing either detention or filtration to reduce sediment and floatable materials in storm water.

PRIMARY USE
Inlet protection is normally used as a secondary defense in site erosion control . it is normally used in new developments that include new inlets or roads with new curb inlets or during major repairs to existing roadways. Inlet protection has limited use in developed areas due to the potential for flooding, traffic safety and pedestrian safety and maintenance problems. Inlet protection can reduce sediment in storm sewer system by serving as a back up system to onsite controls or by reducing sediment loads from controls with limited effectiveness such as straw bale dikes.

APPLICATIONS
Different variations are used for different conditions as follows:
- Filter barrier protection (similar to a silt fence barrier around the inlet) is appropriate when the drainage area is less than one acre and the basin slope is less than five (5) percent. This type of protection is not applicable in paved areas.
- Block and gravel (crushed stone, recycled concrete is also appropriate) protection is used when flows exceed 0.5 c.f.s. and it is necessary to allow for overtopping to prevent flooding
- Wire mesh and gravel protection (crushed stone, recycled concrete is also appropriate) is used when flows exceed 0.5 c.f.s. and construction traffic may occur over the inlet. This form of protection may be used with both curb and drop inlets

Applications
Perimeter Control
Slope Protection
Sediment Trapping
Channel Protection
Temporary Stabilization
Permanent Stabilization
Waste Management
Housekeeping Practices

Targeted Constituents
- ◒ Sediment
- ○ Nutrients Toxic Materials
- ◒ Oil & Grease
- ◒ Floatable Materials
- ◒ Other Construction Wastes

Implementation Requirements
- ◒ Capital Costs
- ◒ Maintenance
- ◒ Training
- ○ Suitability for Slopes >5%

Legend
- ● Significant Impact
- ◒ Medium Impact
- ○ Low Impact
- ? Unknown or Questionable Impact

BMP
12

City of Baton Rouge
Parish of
East Baton Rouge

Department of Public Works

Check Dams

LIMITATIONS
Minor ponding will occur upstream of the check dams.

For heavy flows or high velocity flows, extensive maintenance or replacement of the dams will be required.

Check dams are not a total treatment technique.

MAINTENANCE REQUIREMENTS
Maintenance of the dams should adhere to the maintenance requirements of the management practice used for the dam.

BMP
10

Department of Public Works

Dust Control BMP

MAINTENANCE REQUIREMENTS
Most dust control measures require frequent, often daily, attention.

ADDITIONAL INFORMATION
Dust control BMP's generally stabilize expose
dust particles. For heavily traveled and disturbed areas, wet suppression (watering), chemical dust suppression, gravel or asphalt surfacing, temporary gravel construction entrances, equipment wash-out areas, and haul truck covers can be employed as dust control applications. Permanent or temporary vegetation and mulching and fences can be employed for areas of occasional or no construction traffic. Preventive measures would include minimizing surface areas to be disturbed.

Many of the reasonably available control measures for controlling dust from construction sites can also be implemented as BMPs for storm water pollution prevention. Those BMPs include:

- Pave, vegetate, or chemically stabilize access points where unpaved traffic surfaces adjoin paved roads.
- Provide covers for haul truck transporting materials that contribute to dust.
- Provide suppression or chemical stabilization of exposed soils.
- Provide for rapid clean-up of sediments deposited on paved roads. Furnish stabilized construction road entrances and vehicle wash down areas.
- Stabilize unpaved haul roads, parking and staging areas. Reduce speed and trips on unpaved roads.
- Implement dust control measures for material stockpiles.
- Prevent drainage of sediment laden storm water onto paved surfaces.
- Stabilize abandoned construction sites using vegetation or chemical stabilization methods.
- Limit the amount of areas disturbed by clearing and earth moving operations by scheduling these activities in phases.

For the chemical stabilization, there are many products available as dust palliatives for chemically stabilizing gravel roadways and stockpiles.

In addition, there are many other BMPs identified in this

- Seeding and Plantings
- Stabilized Construction Entrances
- Construction Road Stabilization
- Mulching

BMP
11

Department of Public Works

Inlet Protection

- Excavated impoundment protection around a drop inlet may be used for protection against sediment entering a storm drain system. With this method, it is necessary to install weep holes to allow the impoundment to drain completely. The impoundment shall be sized such that the volume of excavation shall be equal to 1800 to 3600 cubic feet per acre of contributing drainage area entering the inlet for full effectiveness. Smaller volumes can be used for reduced effectiveness.

DESIGN CRITERIA
- Filter fabric protection shall be designed and maintained in a manner similar to silt fence.
- Maximum depth of flow shall be eight (8) inches or less depending on vehicular and pedestrian traffic.
- Positive drainage is critical in the design of inlet protection. If overflow is not provided for at the inlet, flows which exceed the capacity of the inlet protection system shall be routed through established swales, streets or other watercourses to minimize damage due to ponding and to provide for public safety.

LIMITATIONS
Ponding will occur at the inlet with possible flooding as a result.

Inlet protection is only viable at low point inlets. Inlets which are on a slope cannot be effectively protected because stormwater will bypass the inlet and continue downstream, causing an overload condition at inlets beyond.

MAINTENANCE REQUIREMENTS
Inspections should be made on a weekly basis, especially after large (> 0.5 inches) storm events. When silt fence is used and the fabric becomes clogged, it should be cleaned or if necessary, replaced. Also, sediment should be removed when it reaches approximately one-half the height of the fence. If a sump is used, sediment should be removed when the volume of the basin is reduced by 50%.

For systems using stone filters, when the stone filter becomes clogged with sediment, the stones must be pulled away from the inlet and cleaned or replaced. Since cleaning of gravel at a construction site may be difficult, an alternative approach would be to use the clogged stone as fill material and put new stone around the inlet.

BMP
12

Department of Public Works

STATE OF LOUISIANA
THOMAS A. STEPHENS
License No. 19417
PROFESSIONAL ENGINEER
IN
CIVIL ENGINEERING
2/12/2013

STANDARD PLAN NO.	DATED	SHEET NO.
903–01	FEBRUARY 25, 2008	4 OF 11

STORM WATER POLLUTION PREVENTION PLAN BEST MANAGEMENT PRACTICES

ENGINEERING DIVISION
DEPARTMENT OF PUBLIC WORKS
CITY OF BATON ROUGE & PARISH OF EAST BATON ROUGE

DESIGNED	DRAWN	CHECKED	APPROVED
G. CHENG	G. VANNICE	G. CHENG	T. STEPHENS

DATE	DESCRIPTION REVISIONS	BY

903–01

PROJECT NO.	SHEET
12-CS-HC-0043	616

Dewatering Operations

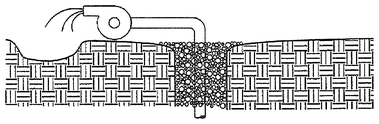

DESCRIPTION
Prevent or reduce the discharge of pollutants to storm water from dewatering operations by using sediment controls and by testing the water for contamination.

APPLICATIONS
There are two general classes or pollutants that may result from dewatering operations: sediment, and toxics and petroleum products. A high sediment content in dewatering discharges is common because of the nature of the operation. On the other hand, toxics and petroleum products are not commonly found in dewatering discharges unless, the site or surrounding area has been used for light or heavy industrial activities, or the area has a history of groundwater contamination.

DESIGN CRITERIA
- Use sediment controls to remove sediment from water generated from dewatering.
- Use filtration to remove sediment from a sediment trap or basin. Filtration can be achieved with:
  - Sump pit and a standpipe in the center with holes and wapped in filter fabric. The standpipe is surrounded by stones which filters the water as it collects in the pit before being pumped out;
  - Floating suction hose allowing cleaner surface water to be pumped out; or
  - Standpipe in the sediment basin with slits and wrapped in filter fabric to remove sediments.
- Toxics and Petroleum Products:
  - In areas suspected of having groundwater contamination, protect yourself early in the excavation process by sampling and having the water tested at a certified laboratory. Check with the Louisiana Department of Environmental Quality and the PROGRAM MANAGER for their requirements, including additional water quality tests and disposal options.

Applications
- Perimeter Control
- Slope Protection
- **Sediment Trapping**
- Channel Protection
- Temporary Stabilization
- Permanent Stabilization
- Waste Management
- Housekeeping Practices

Targeted Constituents
- ○ Sediment
- ○ Nutrients
- ○ Toxic Materials
- ◒ Oil & Grease
- ○ Floatable Materials
- ● Other Construction Wastes

Implementation Requirements
- ◒ Capital Costs
- ○ Maintenance
- ◒ Training
- ○ Suitability for Slopes >5%

Legend
- ● Significant Impact
- ◒ Medium Impact
- ○ Low Impact
- ? Unknown or Questionable Impact

BMP
13

City of Baton Rouge
Parish of
East Baton Rouge

Department of Public Works

Material Delivery And Storage

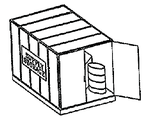

DESCRIPTION
Prevent or reduce the discharge or pollutants to storm water from material delivery and storage by minimizing the storage of hazardous materials on-site, storing materials in a designated area, installing secondary containment, conducting regular inspection, and training employees and subcontractors.

This best management practice covers only material delivery and storage. For information on wastes, see the waste management BMPs.

APPLICATIONS
The following materials are commonly stored on construction sites:
- Pesticides and herbicides.
- Fertilizers.
- Detergents.
- Petroleum products such as fuel, oil, and grease.
- Other hazardous chemicals such as acids, lime, glues, paints, solvents, and curing compounds.

Storage of these materials on-site can pose the following risks:
- Storm water contamination.
- Injury to workers or visitors.
- Groundwater contamination.
- Soil contamination.

DESIGN CRITERIA
- Designate an area of the construction site for material delivery and storage.
  - Place near the construction entrance, away from waterways
  - Avoid transport near drainage paths or waterways
  - Surround with earth berms

Applications
- Perimeter Control
- Slope Protection
- Sediment Trapping
- Channel Protection
- Temporary Stabilization
- Permanent Stabilization
- Waste Management
- **Housekeeping Practices**

Targeted Constituents
- ○ Sediment
- ○ Nutrients
- ○ Toxic Materials
- ◒ Oil & Grease
- ○ Floatable Materials
- ● Other Construction Wastes

Implementation Requirements
- ◒ Capital Costs
- ○ Maintenance
- ◒ Training
- ○ Suitability for Slopes >5%

Legend
- ● Significant Impact
- ◒ Medium Impact
- ○ Low Impact
- ? Unknown or Questionable Impact

BMP
14

City of Baton Rouge
Parish of
East Baton Rouge

Department of Public Works

Spill Prevention And Control

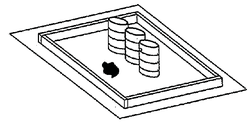

DESCRIPTION
Prevent or reduce the discharge of pollutants to storm water from leaks and spills by reducing the chance for spills, stopping the source of spills, containing and cleaning up spills, properly disposing of spill materials, and training employees.

This best management practice covers only spill prevention and control. However, Material Delivery and Storage and Material Use, also contain useful information, particularly on spill prevention. For information on wastes, see the waste management BMPs.

APPLICATIONS
The following steps will help reduce the storm water impacts of leaks and spills:

General Measures
- Hazardous materials and wastes should be stored in covered containers and protected from vandalism.
- Place a stockpile of spill cleanup materials where it will be readily accessible.
- Train employees in spill prevention and cleanup.

Cleanup
- Clean up leaks and spills immediately.
- On paved surfaces, clean up spills with as little water as possible. Use a rag for small spills, mop for general cleanup, and absorbent material for larger spills. If the spilled material is hazardous, then the used cleanup materials are also hazardous and must be sent to either a certified laundry (rags) or disposed of as hazardous waste.
- Never down or bury dry materials spills. Sweep up or excavate the material and dispose of properly. See the waste management BMPs

Applications
- Perimeter Control
- Slope Protection
- Sediment Trapping
- Channel Protection
- Temporary Stabilization
- Permanent Stabilization
- Waste Management
- **Housekeeping Practices**

Targeted Constituents
- ○ Sediment
- ○ Nutrients
- ○ Toxic Materials
- ◒ Oil & Grease
- ○ Floatable Materials
- ● Other Construction Wastes

Implementation Requirements
- ○ Capital Costs
- ○ Maintenance
- ◒ Training
- ○ Suitability for Slopes >5%

Legend
- ● Significant Impact
- ◒ Medium Impact
- ○ Low Impact
- ? Unknown or Questionable Impact

BMP
15

City of Baton Rouge
Parish of
East Baton Rouge

Department of Public Works

Dewatering Operations

- Contaminated water can be expensive to treat and/or dispose of properly. However, addressing the problem before construction is much less expensive than after the structures are in place.

LIMITATIONS
The presence of contaminated water may indicate contaminated soil as well. If contaminated water is discovered or suspected, the CONTRACTOR shall stop dewatering and immediately notify the PROGRAM MANAGER.

MAINTENANCE REQUIREMENTS
Maintain sediment controls and filters in good working order.

Inspect excavated areas daily for signs contaminated water as evidenced by discoloration, oily sheet, or odors.

BMP
13

Department of Public Works

Material Delivery And Storage

- Storage of reactive, ignitible, or flammable liquids must comply with the local fire codes and BTR Airport Rescue and Fire Fighting (ARFF) regulations. Contact ARFF, Captain Milton Thomas (504-355-2068), to review site materials, quantities, and proposed storage area to determine specific requirements. See the Flammable and Combustible Liquid Code NFPA30.
- Keep an accurate, up-to-date inventory in your SWPPP of the materials delivered and stored on-site.
- Keep your inventory down. Store only the amount you need, for only as long as you need it.
- Store as few hazardous materials on-site as possible.
- Handle hazardous materials as infrequently as possible.
- Designate a secure material storage area away from drainage courses and near the site entrance.
- Whenever possible, store materials in a covered area with secondary containment such as an earthen dike, horse trough, or even kid's wading pool for non-reactive materials such as detergents, oil, grease and paints. Small amounts of material may be secondarily contained in "busboy" trays or concrete mixing trays.
- Do not store chemicals, drums, or bagged materials directly on the ground. Place these items in secondary containment.
- If drums must be kept uncovered, store them at a slight angle to reduce ponding or rainwater on the lids and to reduce corrosion.
- Try to keep chemicals in their original containers, and keep them well labeled.
- Train employees and subcontractors.
- Employees trained in emergency spill cleanup procedures should be present when dangerous materials or liquid chemicals are unloaded.

LIMITATIONS
Storage sheds often must meet building and fire code requirements.

MAINTENANCE REQUIREMENTS
Keep the designated storage area clean and well organized.
Conduct routine weekly inspections and check for external corrosion of material containers.
Keep an ample supply of spill cleanup materials near the storage area.

BMP
14

Department of Public Works

Spill Prevention And Control

Reporting
- Immediately report spills to the BTR Airport Rescue & Fire Fighting Unit (504-355-2068). Federal regulations require that any oil spill into a water body or onto an adjoining shoreline be reported to the National Response center (NRC) at 800-424-8802 (24 hour).

Vehicle and Equipment Maintenance
- If maintenance must occur on-site, use a designated area, located away from drainage courses, prevent the runon of storm water and the runoff of spills.
- Regularly inspect on-site vehicles and equipment for leaks, and repair immediately.
- Check incoming vehicles and equipment (including delivery trucks, and employee and subcontractor vehicles) for leaking oil and fluids. Do not allow leaking vehicles or equipment on-site.
- Always use secondary containment, such as a drain pan or deep cloth, to catch spills or leaks when removing or changing fluids.
- Place drip pans or absorbent materials under equipment when not in use.
- Use adsorbent materials on small spills rather than hosing down or burying the spill. Remove the adsorbent materials promptly and dispose of properly.
- Promptly transfer used fluids to the proper waste or recycling drums. Don't leave full drip pans or other open containers lying around.
- Oil filters disposed of in trash cans or dumpsters can leak oil and contaminate storm water. Place the oil filter in a funnel over a water oil recycling drum to drain excess oil before disposal. Oil filters can also be recycled. Ask your oil supplier or recycler about recycling oil filters.
- Store cracked batteries in a non-leaking secondary container. Do this with all cracked batteries ven if you think all the acid has drained out. If you drop a battery, treat it as if is cracked. Put in into the containment area until you are sure it is not leaking.

Vehicle and Equipment Fueling
- If fueling must occur on-site, use designated areas, located away from drainage courses, to prevent the runon of storm water and the runoff of spills.
- Discourage "topping-off" of fuel tanks.
- Always use secondary containment, such as a drain pan, when fueling to catch spills/leaks.

LIMITATIONS
If necessary, use a private spill cleanup company.

MAINTENANCE REQUIREMENTS
Keep ample supplies or spill control and cleanup materials on-site, near storage, unloading, and maintenance areas.

Update your spill cleanup materials as changes occur in the types of chemicals on-site.

BMP
15

Department of Public Works

STATE OF LOUISIANA
THOMAS A. STEPHENS
License No. 15417
PROFESSIONAL ENGINEER
IN
CIVIL ENGINEERING
2/14/2013

STANDARD PLAN NO.	DATED	SHEET NO.
903–01	FEBRUARY 25, 2008	5 OF 11

STORM WATER POLLUTION PREVENTION PLAN BEST MANAGEMENT PRACTICES

DATE	DESCRIPTION REVISIONS	BY

ENGINEERING DIVISION
DEPARTMENT OF PUBLIC WORKS
CITY OF BATON ROUGE & PARISH OF EAST BATON ROUGE

DESIGNED	DRAWN	CHECKED	APPROVED
G. CHENG	G. VANNICE	G. CHENG	T. STEPHENS

903–01

PROJECT NO.	SHEET
12-CS-HC-0043	617

Lime Stabilization BMP

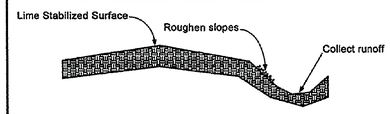

DESCRIPTION
Lime stabilization is used extensively in some areas to stabilize pavement subbases for roadways, parking lots and other paved surfaces. Hydrated lime is applied to the soil and mixed through disking and other techniques, then allowed to cure. This practice will reduce the potential for runoff to carry lime offsite, where it may impact aquatic life through changing the pH balance of streams, ponds and other water bodies.

PRIMARY USE
This BMP consists of a series of techniques that should be implemented when lime is required for soil stabilization.

APPLICATIONS
Each of the techniques listed can be used under a variety of conditions. The engineer should determine the applicability of the technique based on site conditions such as available open space, quantity of area to be stabilized, proximity of nearby water courses and other BMPs employed at the site. The use of diversion dikes and interceptor swales (see appropriate

in conjunction with these techniques to reduce the impact of the lime.

DESIGN CRITERIA
- The contractor shall limit lime operations to that which can be thoroughly mixed and compacted by the end of each work day.
- No traffic other than water trucks and mixing equipment shall be allowed to pass over the spread lime until after completion of mixing.
- Areas adjacent and downstream of stabilized areas shall be roughened to intercept lime from runoff and reduce runoff velocity.
- Geotextile fabrics such as those used for silt fence should not be used to address lime since the grain size of lime is significantly smaller than the equivalent opening size of the fabric.
- For areas which phasing of lime operations is impractical, use of a curing seal such as Liquid Asphalt, Grade MC-250 or MC-800 applied at a rate of 0.15 gallons per square yard of surface can be used to protect the base.

Applications
Perimeter Control
Slope Protection
Sediment Trapping
Channel Protection
Temporary Stabilization
Permanent Stabilization
Waste Management
Housekeeping Practices

Targeted Constituents
- ○ Sediment
- ○ Nutrients / Toxic Materials
- ○ Oil & Grease
- ○ Floatable Materials
- ○ Other Construction Wastes

Implementation Requirements
- ○ Capital Costs
- ○ Maintenance
- ○ Training
- ○ Suitability for Slopes >5%

Legend
- ● Significant Impact
- ◒ Medium Impact
- ○ Low Impact
- ? Unknown or Questionable Impact

BMP
16

City of Baton Rouge Parish of East Baton Rouge
Department of Public Works

Sand Bag Berm

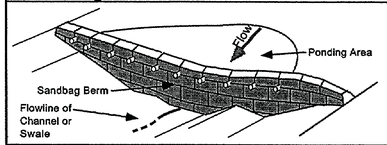

DESCRIPTION
Sandbag berms consist of stacked sandbags installed across a watercourse to direct flow around construction or to allow sedimentation to occur for flows downstream of disturbed areas. There are overflow pipes located in the top of the berm to allow controlled outflow of water after sedimentation has occurred.

PRIMARY USE
A sandbag berm is a temporary sediment control method that addresses the problem of construction in creeks, channels and other watercourses which carry a constant flow and is subjected to high, concentrated flows. A sandbag berm can also be used to create a small sedimentation pond prior to the completion of a permanent detention basin.

Sandbag berms can be used as check dams in temporary swales or borrow ditches.

Sandbag berms are not recommended for typical perimeter controls where sheet flow is prevalent.

APPLICATIONS
During utility or any type of construction in channels or stream beds, sandbag berms can be used as check dams across channels, serve as a barrier for utility trenches or even provide a temporary channel crossing for construction equipment without seriously affecting stream conditions. Sandbag berms can also be installed parallel to a roadway, providing a corridor of sediment control similar to that provided by a silt fence or hay bales with the exception that a sand bag dike is capable of controlling much higher flows and is much more durable. For site construction sandbag berms can be used to divert or direct flow or create a temporary sediment basin with the added dimension of being able to be moved to accommodate changes in construction much more easily than compacted earth berms.

Applications
Perimeter Control
Slope Protection
Sediment Trapping
Channel Protection
Temporary Stabilization
Permanent Stabilization
Waste Management
Housekeeping Practices

Targeted Constituents
- ○ Sediment
- ○ Nutrients / Toxic Materials
- ○ Oil & Grease
- ○ Floatable Materials
- ○ Other Construction Wastes

Implementation Requirements
- ● Capital Costs
- ○ Maintenance
- ○ Training
- ● Suitability for Slopes >5%

Legend
- ● Significant Impact
- ◒ Medium Impact
- ○ Low Impact
- ? Unknown or Questionable Impact

BMP
17

City of Baton Rouge Parish of East Baton Rouge
Department of Public Works

Sediment Basin

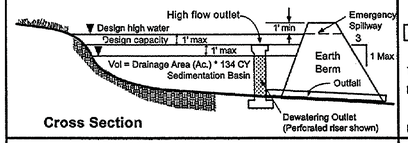

Cross Section

DESCRIPTION
A sediment basin is a pond area with a controlled outlet in which sediment-laden runoff is directed to allow settling of suspended sediment from the runoff. It provides treatment for the runoff as well as detention and controlled release of runoff, minimizing flood impacts downstream.

PRIMARY USE
Sediment basins should be used for all sites with adequate open space to site the basin and the ability to direct a majority of the site drainage into the basin. For sites with disturbed areas of 10 acres and larger that are part of a common drainage area, sediment basins are required as either temporary or permanent controls unless specific site conditions limit their use.

APPLICATIONS
Sediment basins serve as treatment devices which can be used on a variety of project types. It is normally used in site development projects in which large areas of land are available for the basin, a stream or drainage way crosses the site, or a specific water feature is planned for the site. Sediment basins are highly effective at reducing sediment and other pollutants for design storm conditions. It also reduces maintenance requirements due to the central location of the sediment and minimal structural requirements of the basin.

DESIGN CRITERIA
- Maximum drainage area contributing to the basin should be 10 acres or less. Larger sediment basins will require specific measures to address the potential for overtopping of the basin and possible failure of the berm.
- Minimum capacity of the basin shall be 3600 cubic feet per disturbed acre of contributing drainage area.
- Deposited sediment shall be removed when the storage capacity of the basin has been depleted by 20%.
- Minimum width of the embankment at the top shall be 8 feet.
- Minimum embankment slope shall be 3:1.
- Maximum embankment height shall be 6 feet as measured from

Applications
Perimeter Control
Slope Protection
Sediment Trapping
Channel Protection
Temporary Stabilization
Permanent Stabilization
Waste Management
Housekeeping Practices

Targeted Constituents
- ● Sediment
- ◒ Nutrients / Toxic Materials
- ○ Oil & Grease
- ◒ Floatable Materials
- ○ Other Construction Wastes

Implementation Requirements
- ● Capital Costs
- ◒ Maintenance
- ○ Training
- ● Suitability for Slopes >5%

Legend
- ● Significant Impact
- ◒ Medium Impact
- ○ Low Impact
- ? Unknown or Questionable Impact

BMP
18

City of Baton Rouge Parish of East Baton Rouge
Department of Public Works

Lime Stabilization BMP

- Use of sediment basins with a significant (>36 hour) drawdown time is encouraged for large stabilized areas (see Sediment Basin BMP).

LIMITATIONS
These techniques are part of an overall plan to reduce pollutants from an active construction site. In the case of pollution due to lime, prevention of contamination is the only effective method to address this pollutant. Proper application and mixing along with avoiding applications when there is a significant probability of rain will reduce lime runoff.

MAINTENANCE REQUIREMENTS
None.

BMP
16

Department of Public Works

Sand Bag Berm

DESIGN CRITERIA
- Berms are to be constructed along a line of constant elevation (a contour line) for use as perimeter control devices.
- Maximum flow through rate shall be 0.1 CFS per square foot of berm surface.
- Minimum height shall be 18 inches.
- Minimum width of the berm shall be 18 inches at the top and 54 inches measured at the bottom.
- Maximum side slopes shall be 2:1.
- Maximum design freeboard shall be 0.3 feet
- Sandbags shall be consist of jute, polypropylene, polyethylene or polyamide woven fabric. Jute shall be composed of a uniform weave of undyed and unbleached single jute jarn weighing an average of 1.2 pounds per linear ard of cloth with approximately 78 warp ends per width of cloth. Polypropylene, polyethylene or polyamide woven fabric shall have a minimum unit weight of 4 ounces per square yard, a mullen burst strength of 300 psi minimum and ultraviolet stability exceeding 70 percent, and shall be filled with coarse sand or pea gravel.
- 4" diameter Schedule 40 or greater PVC pipe segments approximately 24 inches in length shall be used immediately below the top layer of sandbags to allow for flow through the berm.
- For severe velocities or high flows, woven wire mesh can be used to maintain the integrity of the berm.
- Sufficient room for the operation of sediment removal equipment shall be provided between the berm and other obstructions in order to properly remove sediment.
- The ends of the berm shall be turned upgrade or shall tie into natural grades to prevent bypass of stormwater.
- In channel applications, the center of the berm must be lower than the outside ends to prevent bypass around the berm.

LIMITATIONS
Sandbag berms are a costly, labor intensive technique which is suitable only for areas subjected to high concentrated flows. The permeability of the berms makes it unsuitable for low flow, perimeter conditions.

Ponding will occur directly upstream from the berm creating the possibility of a flooding concern which should be considered prior to its placement.

For sandbag berms located in high flow areas such as creeks, the potential for berm damage during high flows increases the requirement for maintenance.

MAINTENANCE REQUIREMENTS
Inspections should be made on a daily basis and after each significant (>0.5 inches) rain event. The sandbags shall be reshaped or replaced as need during the inspection. Silt should be removed when it reaches a depth of six (6) inches. In addition, weekly inspections should be made on the PVC pipe segments to assure clear flow.

BMP
17

Department of Public Works

Sediment Basin

the toe of slope on the downstream side.
- The basin outlet shall be designed to accommodate a 10 year design storm without causing damage to the containment structure.
- Minimum outlet capacity shall be 0.2 CFS per acre of contributing drainage area.
- The sediment basin shall have a minimum design dewatering time of 36 hours.
- The basin must be laid out such that the effective flow length of the basin should be at least twice the effective flow width.
- The outlet of the outfall pipe shall be stabilized with rip rap or other form of stabilization with design flows and velocities based on 25 year design storm peak flows. For velocities in excess of 5 feet per second, velocity dissipation measures should be used to reduce outfall velocities.

LIMITATIONS
Sediment basins can be rather large depending on site conditions, requiring the use of expensive development area and comprehensive planning for construction phasing prior to implementation.

Storm events which exceed the design storm event can cause damage to the spillway structure of the basin and may impact downstream concerns.

MAINTENANCE REQUIREMENTS
Sediment shall be removed and the basin shall be regraded to its original dimensions at such point that the capacity of the impoundment has been reduced to 20% of its original storage capacity. The removed sediment shall be stockpiled or redistributed in areas which are protected from erosion.

The basin outlet structure and emergency spillway (if present) should be checked frequently and after each major rain event to check for damage and to insure that obstructions are not diminishing the effectiveness of the structures.

BMP
18

Department of Public Works

STATE OF LOUISIANA
THOMAS A. STEPHENS
License No. 19417
PROFESSIONAL ENGINEER
IN
CIVIL ENGINEERING
2/12/2018

STANDARD PLAN NO.	DATED	SHEET NO.
903–01	FEBRUARY 25, 2008	6 OF 11

STORM WATER POLLUTION PREVENTION PLAN BEST MANAGEMENT PRACTICES

ENGINEERING DIVISION
DEPARTMENT OF PUBLIC WORKS
CITY OF BATON ROUGE & PARISH OF EAST BATON ROUGE

DESIGNED	DRAWN	CHECKED	APPROVED
G. CHENG	G. VANNICE	G. CHENG	T. STEPHENS

DATE	DESCRIPTION REVISIONS	BY

903–01

PROJECT NO.	SHEET
12-CS-HC-0043	618

Stone Outlet Sediment Trap

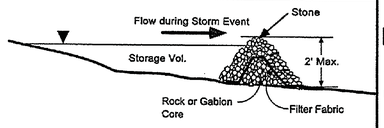

DESCRIPTION
A stone outlet sediment trap is a small ponding area formed by placing a stone embankment or gabion core with an integral stone filter outlet across a drainage swale for the purpose of detaining sediment-laden runoff generated by construction activities. The sediment trap detains runoff long enough to allow most of the suspended sediment to settle while still allowing for diffused flow of runoff.

PRIMARY USE
A sediment trap is used in situations where flows are concentrated in a drainage swale or channel. The sediment trap reduces velocities and allows for settling of sediment while allowing the area behind the trap to de-water. This is normally used for long term (18 months or less) applications in which a sediment basin is not feasible due to site or construction method restrictions. The use of a gabion core as opposed to a
dewatering the area as necessary.

APPLICATIONS
Temporary stone outlet sediment traps are installed at locations where concentrated flows require a protected outlet to contain sediment or spread flow prior to discharge.

DESIGN CRITERIA
- Maximum drainage area contributing to the trap shall be 3 acres. For larger drainage areas, a sediment basin should be used.
- The minimum length of the crest, in feet, of the stone outlet shall be equal to 6 times the size (acres) of the contributing drainage area.
- Deposited sediment shall be removed when the depth of sediment is equal to one-third of the height of the outlet structure as measured from the original toe of slope to the crest of the outlet, or has reached a depth of one foot, whichever is less.
- Minimum width of the embankment at the top shall be 3 feet.
- Minimum embankment slope shall be 3:1.

Applications
Perimeter Control
Slope Protection
Sediment Trapping
Channel Protection
Temporary Stabilization
Permanent Stabilization
Waste Management
Housekeeping Practices

Targeted Constituents
● Sediment
○ Nutrients
○ Toxic Materials
○ Oil & Grease
◒ Floatable Materials
○ Other Construction Wastes

Implementation Requirements
● Capital Costs
◒ Maintenance
○ Training
● Suitability for Slopes >5%

Legend
● Significant Impact
◒ Medium Impact
○ Low Impact
? Unknown or Questionable Impact

BMP
19

City of Baton Rouge
Parish of
East Baton Rouge

Department of Public Works

Vehicle And Equipment Cleaning

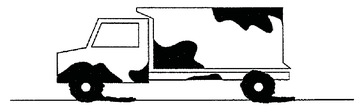

DESCRIPTION
Prevent or reduce the discharge of pollutants to storm water from vehicle and equipment cleaning by using off-site facilities, washing in designated areas only, discharges to the storm drain by infiltrating or recycling the wash water and training employees and subcontractors.

APPLICATIONS
Washing vehicles and equipment outdoors or in areas where wash water

DESIGN CRITERIA
- Use off-site commercial washing businesses as much as possible. For operations involving a large number of vehicles or pieces of equipment, consider conducting this work at an off-site commercial business equipped to handle and dispose of the wash waters properly. Performing this work off-site can also be economical by eliminating the need for a separate washing operation at your site.
- If washing must occur on-site, use designated, bermed wash areas to prevent wash water contact with storm water, creeks, rivers, and other water bodies.
for wash water collection and subsequent infiltration into the ground.
- Use as little water as possible to avoid having to install erosion and sediment controls for the wash area.
- Use phosphate-free, biodegradable soaps.
- Educate employees and subcontractors on pollution prevention measures.
- Do not permit steam cleaning on-site. Steam cleaning can generate significant pollutant concentrations leading to potential storm water and groundwater contamination.
- In construction areas where truck tires collect mud, provide a cleaning areas for removing soil before truck leaves site. Truck tires cleaning area should not be directly a jacent to drainage conveyances. A vegetated buffer area should be located downstream of the tire wash. For heavy use of tire wash area, silt fencing, or sediment trapping may be necessary.

Applications
Perimeter Control
Slope Protection
Sediment Trapping
Channel Protection
Temporary Stabilization
Permanent Stabilization
Waste Management
Housekeeping Practices

Targeted Constituents
◒ Sediment
○ Nutrients
○ Toxic Materials
◒ Oil & Grease
○ Floatable Materials
○ Other Construction Wastes

Implementation Requirements
○ Capital Costs
◒ Maintenance
◒ Training
○ Suitability for Slopes >5%

Legend
● Significant Impact
◒ Medium Impact
○ Low Impact
? Unknown or Questionable Impact

BMP
20

City of Baton Rouge
Parish of
East Baton Rouge

Department of Public Works

Vehicle And Equipment Fueling



DESCRIPTION
Prevent fuel spills and leaks, and reduce their impacts to storm water by using off-site facilities, fueling in designated areas only, enclosing or covering stored fuel, implementing spill controls, and training employees and subcontractors.

APPLICATIONS
Fueling vehicles and equipment outdoors or in areas where wash water flows onto the ground can pollute storm water.

DESIGN CRITERIA
- Use of off-site fueling stations as much as possible. If you fuel a large number of vehicles or pieces of equipment, consider using an off-site fueling station equipped to handle fuel and spills properly. Performing this work off-site can also be economical by eliminating the need for a separate fueling area at your site.
- If fueling must occur on-site, use designated areas, located away from drainage course to prevent the runon of storm water and the runoff of spills.
- Discourage "topping-off" of fuel tanks.
- Always use secondary containment, such as a drain pan, when fueling to catch spills/leaks.
- Place a stockpile of spill cleanup materials where it will be readily accessible.
- Use adsorbent materials on small spills rather than hosing down or burying the spill. Remove the adsorbent materials promptly and dispose of properly.
- Carry out all Federal and State requirements regarding stationary above ground storage tanks.
- Do not use mobile fueling of mobile construction equipment around the site; rather, transport the equipment to designated fueling areas. With the exception of tracked equipment such as bulldozers and perhaps small forklifts, most vehicles should be able to travel to a designated area with little lost time.

Applications
Perimeter Control
Slope Protection
Sediment Trapping
Channel Protection
Temporary Stabilization
Permanent Stabilization
Waste Management
Housekeeping Practices

Targeted Constituents
○ Sediment
○ Nutrients
○ Toxic Materials
◒ Oil & Grease
○ Floatable Materials
○ Other Construction Wastes

Implementation Requirements
◒ Capital Costs
○ Maintenance
◒ Training
○ Suitability for Slopes >5%

Legend
● Significant Impact
◒ Medium Impact
○ Low Impact
? Unknown or Questionable Impact

BMP
21

City of Baton Rouge
Parish of
East Baton Rouge

Department of Public Works

Stone Outlet Sediment Trap

- Maximum embankment height shall be 2 feet as measured from the toe of slope to the crest of the stone outlet. The height of the compacted earth embankment shall be one foot higher than the crest of the outlet.
- The maximum allowable flow-through rate shall be 0.1 CFS per square foot of the frontal area of the outlet structure.
- The effective life of the stone outlet sediment trap is approximately 18 months.

LIMITATIONS
Limited applications due to cost of construction, availability of materials, and the amount of land required.

Can cause minor flooding upstream of dam, impacting construction operations.

This technique serves as a temporary measure during construction. It should not be used for more than 18 months due to reduced efficiency.

MAINTENANCE REQUIREMENTS
Sediment shall be removed and the area directly behind the berm shall be regraded to its original dimensions at such point when the capacity of the impoundment has been reduced to one-half of its original storage capacity. The removed sediment shall be stockpiled or redistributed in areas which are protected from erosion.

The stone outlet structure should be inspected frequently and after each major rain event to check for clogging of the void spaces between stones. If the aggregate appears to be silted in such that efficiency is diminished, the stone should be replaced.

BMP
19

Department of Public Works

Vehicle And Equipment Cleaning

LIMITATIONS
Even phosphate-free, biodegradable soaps have been shown degrades.
Sending vehicles/equipment off-site should be done in conjunction with Entrance).

MAINTENANCE REQUIREMENTS
Minimal.

BMP
20

Department of Public Works

Vehicle And Equipment Fueling

- Train employees and subcontractors in proper fueling and cleanup procedures.

LIMITATIONS
Sending vehicles/equipment off-site should be done in conjunction with Stabilized Construction Entrance BMP.

MAINTENANCE REQUIREMENTS
Keep ample supplies of spill cleanup materials on-site.
Inspect fueling areas and storage tanks on a regular schedule.

BMP
21

Department of Public Works

STATE OF LOUISIANA
THOMAS A. STEPHENS
License No. 19417
PROFESSIONAL ENGINEER
IN
CIVIL ENGINEERING
2/12/2018

STANDARD PLAN NO.	DATED	SHEET NO.
903–01	FEBRUARY 25, 2008	7 OF 11

STORM WATER POLLUTION PREVENTION PLAN BEST MANAGEMENT PRACTICES

DATE	DESCRIPTION REVISIONS	BY

ENGINEERING DIVISION
DEPARTMENT OF PUBLIC WORKS
CITY OF BATON ROUGE & PARISH OF EAST BATON ROUGE

DESIGNED	DRAWN	CHECKED	APPROVED
G. CHENG	G. VANNICE	G. CHENG	T. STEPHENS

PROJECT NO.	SHEET
12-CS-HC-0043	619

Solid Waste Management

DESCRIPTION
Large volumes of solid waste are often generated at construction sites including: packaging, pallets, wood waste, concrete waste, soil, electrical wiring, cuttings, and a variety of other materials. The solid waste management practice lists techniques to minimize the potential of storm water contamination from solid waste through appropriate storage and disposal practices.

PRIMARY USE
These practices should be a part of all construction practices. By limiting the trash and debris on site, storm water quality is improved along with reduced clean up requirements at the completion of the project.

APPLICATIONS
The solid waste management practice for construction sites is based on proper storage and disposal practices by construction workers and supervisors. Key elements of the program are education and modification of improper disposal habits. Cooperation and vigilance is required on the part of supervisors and workers to ensure that the recommendations and procedures are followed. Following are lists describing the targeted materials and recommended procedures:

- Targeted Solid Waste Materials
  - Paper and cardboard containers
  - Plastic packaging
  - Styrofoam packing and forms
  - Insulation materials (non-hazardous)
  - Wood pallets
  - Wood cuttings
  - Pipe and electrical cuttings
  - Concrete, brick, and mortar waste
  - Shingle cuttings and waste
  - Roofing tar
  - Steel (cuttings, nails, rust residue)
  - Gypsum board cuttings and waste
  - Sheathing cuttings and waste
  - Miscellaneous cutting and waste
  - Food waste
  - Demolition waste

Storage Procedures
- Wherever possible, minimize production of solid waste materials.
- Designate a foreman or supervisor to oversee and enforce proper solid waste procedures.
- Instruct construction workers in proper solid waste procedures.
- Segregate potentially hazardous waste from non-hazardous construction site debris.

Applications
Perimeter Control
Slope Protection
Sediment Trapping
Channel Protection
Temporary Stabilization
Permanent Stabilization
Waste Management
Housekeeping Practices

Targeted Constituents
○ Sediment
● Nutrients
Toxic Materials
○ Oil & Grease
● Floatable Materials
● Other Construction Wastes

Implementation Requirements
◒ Capital Costs
◒ Maintenance
◒ Training
○ Suitability for Slopes >5%

Legend
● Significant Impact
◒ Medium Impact
○ Low Impact
? Unknown or Questionable Impact

BMP
22

City of Baton Rouge
Parish of
East Baton Rouge

Department of Public Works

Hazardous Waste Management

DESCRIPTION
The hazardous waste management BMP addresses the problem of storm water polluted with hazardous waste through spills or other forms of contact. The objective of the Management Program is to minimize the potential of stormwater contamination from common construction site hazardous wastes through appropriate recognition, handling, storage and disposal practices.

It is not the intent of this Management Program to supersede or replace normal site assessment and remediation procedures. Significant spills and/or contamination warrant immediate response by trained professionals. Suspected job-site contamination should be immediately reported to regulatory authorities and protective actions taken. The General Permit requires reporting of significant spills to the National Response Center (NRC) at (800) 424-8802.

PRIMARY USE
These management practices along with applicable OSHA and EPA guidelines should be incorporated at all construction sites which use or generate hazardous wastes. Many wastes such as fuel, oil, grease, fertilizer and pesticide are present at most construction sites.

INSTALLATION, APPLICATION AND DISPOSAL CRITERIA
The hazardous waste management techniques presented here are based on proper recognition, handling, and disposal practices by construction workers and supervisors. Key elements of the management program are education, proper disposal practices, as well as provisions for safe storage and disposal. Following are lists describing the targeted materials and recommended procedures:

- Targeted Hazardous Waste Materials
  - Paints
  - Solvents
  - Stains
  - Wood preservatives
  - Cutting oils
  - Greases
  - Roofing tar
  - Pesticides
  - Fuels & lube oils
  - Lead based paints (Demolition)

Storage Procedures
- Wherever possible, minimize use of hazardous materials.
- Minimize generation of hazardous wastes on the job-site.
- Segregate potentially hazardous waste from non-hazardous construction site debris.

Applications
Perimeter Control
Slope Protection
Sediment Trapping
Channel Protection
Temporary Stabilization
Permanent Stabilization
Waste Management
Housekeeping Practices

Targeted Constituents
○ Sediment
● Nutrients
Toxic Materials
● Oil & Grease
○ Floatable Materials
● Other Construction Wastes

Implementation Requirements
◒ Capital Costs
◒ Maintenance
◒ Training
○ Suitability for Slopes >5%

Legend
● Significant Impact
◒ Medium Impact
○ Low Impact
? Unknown or Questionable Impact

BMP
23

City of Baton Rouge
Parish of
East Baton Rouge

Department of Public Works

Concrete Waste Management

DESCRIPTION
Concrete waste at construction sites comes in two forms; 1) excess fresh concrete mix including truck and equipment washing, and 2) concrete dust and concrete debris resulting from demolition. Both forms have the potential to impact water quality through storm water runoff contact with the waste.

PRIMARY USE
Concrete waste is present at most construction sites. This BMP should be utilized at sites in which concrete waste is present.

APPLICATIONS
A number of water quality parameters can be affected by introduction of concrete - especially fresh concrete. Concrete affects the pH of runoff, causing significant chemical changes in water bodies and harming aquatic life. Suspended solids in the form of both cement and aggregate dust are also generated from both fresh and demolished concrete waste.

Current Unacceptable Waste Concrete Disposal Practices
- Dumping in vacant areas on the job-site
- Illicit dumping off-jobsite
- Dumping into ditches or drainage facilities

Recommended Disposal Practices
- Avoid unacceptable disposal practices listed above.
- Develop pre-determined, safe concrete disposal areas.
- Provide a washout area with a minimum of 6 cubic feet of containment area volume for every 10 cubic yards of concrete poured.
- Never dump waste concrete illicitly or without property owners knowledge and consent.
- Treat runoff from storage areas through the use of structural controls as required.

Education
- Drivers and equipment operators should be instructed on proper disposal and equipment washing practices (see above).
- Supervisors must be made aware of the potential environmental consequences of improperly handled concrete waste.

Enforcement
- The construction site manager or foreman must ensure that employees and pre-mix companies follow proper procedures for concrete disposal and equipment washing.
- Employees violating disposal or equipment cleaning directives must be re-educated or disciplined if necessary.

Applications
Perimeter Control
Slope Protection
Sediment Trapping
Channel Protection
Temporary Stabilization
Permanent Stabilization
Waste Management
Housekeeping Practices

Targeted Constituents
○ Sediment
○ Nutrients
Toxic Materials
○ Oil & Grease
○ Floatable Materials
● Other Construction Wastes

Implementation Requirements
◒ Capital Costs
◒ Maintenance
◒ Training
○ Suitability for Slopes >5%

Legend
● Significant Impact
◒ Medium Impact
○ Low Impact
? Unknown or Questionable Impact

BMP
24

City of Baton Rouge
Parish of
East Baton Rouge

Department of Public Works

Solid Waste Management

- Keep solid waste materials under cover in either a closed dumpster or other enclosed trash container that limits contact with rain and runoff.
- Store waste materials away from drainage ditches, swales and catch basins.
- Do not allow trash containers to overflow.
- Do not allow waste materials to accumulate on the ground.
- Prohibit littering by workers and visitors.
- Police site daily for litter and debris.
- Enforce solid waste handling and storage procedures.

Disposal Procedures
- If feasible, segregate recyclable wastes from non-recyclable waste materials and dispose of properly.
- General construction debris may be hauled to a licensed construction debris landfill (typically less expensive than a sanitary landfill).
- Use waste facilities approved by local jurisdiction.
- Runoff which comes into contact with unprotected waste shall be directed into structural treatment such as silt fence to remove debris.

Education
- Educate all workers on solid waste storage and disposal procedures.
- Instruct workers in identification of solid waste and hazardous waste.
- Have regular meetings to discuss and reinforce disposal procedures (incorporate in regular safety seminars).
- Clearly mark on all solid waste containers which materials are acceptable.

Quality Control
- Foreman and/or construction supervisor shall monitor on-site solid waste storage and disposal procedures.
- Discipline workers who repeatedly violate procedures.

Requirements
- Job-site waste handling and disposal education and awareness program.
- Commitment by management to implement and enforce Solid Waste Management Program.
- Compliance by workers.
- Sufficient and appropriate waste storage containers.
- Timely removal of stored solid waste materials.
- Possible modest cost impact for additional waste storage containers.
- Small cost impact for training and monitoring
- Minimal overall cost impact.

LIMITATIONS

Only addresses non-hazardous solid waste.
One part of a comprehensive construction site management program.

BMP
22

Department of Public Works

Hazardous Waste Management

- Designate a foreman or supervisor to oversee hazardous materials handling procedures.
- Keep liquid or semi-liquid hazardous waste in appropriate containers (closed drums or similar) and under cover.
- Store waste materials away from drainage ditches, swales and catch basins.
- Use containment berms in fueling and maintenance areas and where the potential for spills is high.
- Ensure that adequate hazardous waste storage volume is available.
- Ensure that hazardous waste collection containers are conveniently located.
- Do not allow potentially hazardous waste materials to accumulate on the ground.
- Enforce hazardous waste handling and disposal procedures.
- Clearly mark on all hazardous waste containers which materials are acceptable for the container.

Disposal Procedures
- Regularly schedule hazardous waste removal to minimize on-site storage.
- Use only reputable, licensed hazardous waste haulers.

Education
- Instruct workers in identification of hazardous waste
- Educate workers of potential dangers to humans and the environment from hazardous wastes
- Instruct workers on safety procedures for common construction site hazardous wastes
- Educate all workers on hazardous waste storage and disposal procedures
- Have regular meetings to discuss and reinforce identification, handling and disposal procedures (incorporate in regular safety seminars)
- Establish a continuing education program to indoctrinate new employees.

Quality Assurance
- Foreman and/or construction supervisor shall monitor on-site hazardous waste storage and disposal procedures.
- Educate and if necessary, discipline workers who violate procedures.
- Ensure that the hazardous waste disposal contractor is reputable and licensed.

Requirements
- Job-site hazardous waste handling and disposal education and awareness program.
- Commitment by management to implement hazardous waste management practices.
- Compliance by workers.
- Sufficient and appropriate hazardous waste storage containers.
- Timely removal of stored hazardous waste materials.

Costs
- Possible modest cost impact for additional hazardous storage containers.
- Small cost impact for training and monitoring.
- Potential cost impact for hazardous waste collection and disposal by licensed hauler - actual cost depends on type of material and

BMP
23

Department of Public Works

Concrete Waste Management

Demolition Practices
- Monitor weather and wind direction to ensure concrete dust is not entering drainage structures and surface waters.
- Where appropriate, construct sediment traps or other types of sediment detention devices downstream of demolition activities.

Requirements
- Use a pre-determined disposal site(s) approved by LADEQ for waste concrete (See BMP 22 Solid Waste Management). Inform PROGRAM MANAGER of selected disposal site(s).
- Prohibit dumping waste concrete anywhere but pre-determined areas.
- Assign pre-determined truck and equipment washing areas.
- Educate drivers and operators on proper disposal and equipment cleaning procedures.

Costs
- Minimal cost impact for training and monitoring.
- Concrete disposal cost depends on availability and distance to suitable disposal areas
- Additional costs involved in equipment washing could be significant.

LIMITATIONS
This concrete waste management program is one part of a comprehensive construction site waste management program.

BMP
24

Department of Public Works

STATE OF LOUISIANA
THOMAS A. STEPHENS
License No. 19417
PROFESSIONAL ENGINEER
IN
CIVIL ENGINEERING
2/14/2013

STANDARD PLAN NO.	DATED	SHEET NO.
903–01	FEBRUARY 25, 2008	8 OF 11

STORM WATER POLLUTION
PREVENTION PLAN
BEST MANAGEMENT PRACTICES

ENGINEERING DIVISION
DEPARTMENT OF PUBLIC WORKS
CITY OF BATON ROUGE & PARISH OF EAST BATON ROUGE

DESIGNED	DRAWN	CHECKED	APPROVED
G. CHENG	G. VANNICE	G. CHENG	T. STEPHENS

DATE	DESCRIPTION REVISIONS	BY

903–01

PROJECT NO.	SHEET
12-CS-HC-0043	620

Sandblasting Waste Management

DESCRIPTION

The objective of the this management program is to minimize the potential of storm water quality degradation from sandblasting activities at construction sites. The key issues in this program are prudent handling and storage of sandblast media, dust suppression, and proper collection and disposal of spent media. it is not the intent of this program to outline all of the worker safety issues pertinent to this practice. Safety issues should be addressed by construction safety programs as well as local, state, and federal regulations.

INSTALLATION/APPLICATION CRITERIA

Since the media consists of fine abrasive granules, it can be easily transported by air and running water. Sandblasting activities typically create a significant dust problem which must be contained and collected to prevent off-site migration of fines.

Operational Procedures
- Use only inert, non-degradable sandblast media.
- Use appropriate equipment for the job, do not over-blast.
- Wherever possible, blast in a downward direction.
- Install a wind sock or other wind direction instrument.
- Cease blasting activities in high winds or if wind direction could transport grit to drainage facilities.
- Install dust shielding around sandblasting areas.
- Collect and dispose of all spent sandblast grit, use dust containment fabrics and dust collection hoppers and barrels.
- Non-hazardous sandblast grit may be disposed in permitted construction debris landfills or permitted sanitary landfills.
- If sandblast media cannot be fully contained, construct sediment traps downstream from blasting area where appropriate.
- Use fencing where appropriate in areas where blast media - cannot be fully contained.
- If necessary, install misting equipment to remove sandblast grit from the air - prevent runoff from misting operations from entering drainage systems.
- Use vacuum grit collection systems where possible.
- Keep records of sandblasting materials, procedures, and weather conditions on a daily basis.
- Take all reasonable precautions to ensure that sandblasting grit is contained and kept away from drainage structures.

Educational Issues
- Educate all on-site employees of potential dangers to humans and the environment from sandblast grit.

Applications
Perimeter Control
Slope Protection
Sediment Trapping
Channel Protection
Temporary Stabilization
Permanent Stabilization
Waste Management
Housekeeping Practices

Targeted Constituents
- ○ Sediment
- ● Nutrients Toxic Materials
- ○ Oil & Grease
- ○ Floatable Materials
- ● Other Construction Wastes

Implementation Requirements
- ● Capital Costs
- ● Maintenance
- ● Training
- ○ Suitability for Slopes >5%

Legend
- ● Significant Impact
- ◒ Medium Impact
- ○ Low Impact
- ? Unknown or Questionable Impact

BMP 25

City of Baton Rouge Parish of East Baton Rouge

Department of Public Works

Contaminated Soil Management

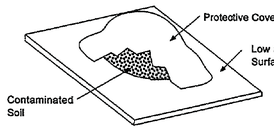

DESCRIPTION
Prevent or reduce the discharge of pollutants to storm water from contaminated soil and highly acidic or alkaline soils by conducting pre-construction surveys, inspecting excavations regularly, and remediating contaminated soil promptly.

APPLICATIONS
Contaminated soils may occur on your site for several reasons including:
Past site uses and activities;
Detected or undetected spills and leaks; and

DESIGN CRITERIA
- Conduct thorough site planning including pre-construction geologic surveys.
- Look for contaminated soil as differences in soil properties.
- Seal bedrock fractures with grout or bentonite to reduce seepage from excavation.
- Prevent leaks and spills to the maximum extent practicable. Contaminated soil can be expensive to treat and/or dispose of properly. However, addressing the problem before building construction is much less expensive than after the buildings are in place.
- Test suspected soils at a certified laboratory.
- If the soil is contaminated, work with the local regulatory agencies to develop options for treatment and/or disposal.

LIMITATIONS
If necessary, use a private spill cleanup company.

MAINTENANCE REQUIREMENTS
Contaminated soils that cannot be treated on-site must be disposed of off-site by a licensed hazardous waste hauler.
The presence of contaminated soil may indicate contaminated water as well.

Applications
Perimeter Control
Slope Protection
Sediment Trapping
Channel Protection
Temporary Stabilization
Permanent Stabilization
Waste Management
Housekeeping Practices

Targeted Constituents
- ○ Sediment
- ◒ Nutrients Toxic Materials
- ○ Oil & Grease
- ○ Floatable Materials
- ◒ Other Construction Wastes

Implementation Requirements
- ● Capital Costs
- ○ Maintenance
- ◒ Training
- ○ Suitability for Slopes >5%

Legend
- ● Significant Impact
- ◒ Medium Impact
- ○ Low Impact
- ? Unknown or Questionable Impact

BMP 26

City of Baton Rouge Parish of East Baton Rouge

Department of Public Works

Pipe Slope Drain

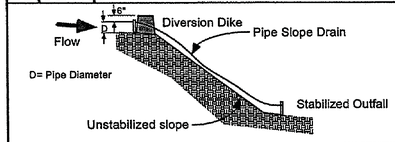

DESCRIPTION
A pipe slope drain is a temporary pipe line typically utilizing flexible pipe that conveys runoff down unstabilized slopes. The drain is anchored on the upstream end with some form of headwall to limit erosion and secure the pipe.

PRIMARY USE
A pipe slope drain is used on sites with a long, unstabilized, steep slope area which is subject to erosion from overland flow. It is normally used in combination with interceptor swales or diversion dikes to direct the flow into the pipe area. The pipe slope drain can provide service for a relatively large area. It does not treat the runoff, therefore if the runoff contains sediment, treatment through a controlled outlet will be required before the flow is released offsite.

APPLICATIONS
Sites with large berms or grade changes such as roadway embankments are candidates for a pipe slope drain. Since provisions must be made to direct the flow into the pipe drain, some grading is normally required upstream of the pipe slope drain. Installed properly, slope erosion can be greatly reduced (but not entirely eliminated) through the use of the drain.

Pipe slope drains also require a stabilized outlet. This is critical since the velocities at the outfall are normally high. Velocity dissipators as well as stone or concrete rip rap are typically required to reduce the velocity and spread the flow, reducing erosion. Flow from a pipe slope drain should be routed to a sediment reduction practice through interceptor swales, diversion dikes or other suitable methods.

DESIGN CRITERIA
- The entrance to the pipe slope drain may be a standard corrugated metal pre-fabricated flared end section with an integral toe plate extending a minimum of 6 inches from the bottom of the end section. The grade of the entrance shall be 3 percent maximum.
- The berm at the entrance shall have a minimum height of the pipe diameter + 6" and a minimum width of 3 times the pipe diameter.
- All sections of the pipe slope drain shall be connected using watertight collars or gasketed watertight fittings.
- All sediment-laden runoff conveyed by the pipe slope drain shall be directed to a sediment trapping facility.
- Temporary pipe slope drains are to be sized to accommodate runoff flows equivalent to a 10 year storm as calculated using the Rational Method and

Applications
Perimeter Control
Slope Protection
Sediment Trapping
Channel Protection
Temporary Stabilization
Permanent Stabilization
Waste Management
Housekeeping Practices

Targeted Constituents
- ◒ Sediment
- ○ Nutrients Toxic Materials
- ○ Oil & Grease
- ◒ Floatable Materials
- ○ Other Construction Wastes

Implementation Requirements
- ● Capital Costs
- ● Maintenance
- ○ Training
- ● Suitability for Slopes >5%

Legend
- ● Significant Impact
- ◒ Medium Impact
- ○ Low Impact
- ? Unknown or Questionable Impact

BMP 28

City of Baton Rouge Parish of East Baton Rouge

Department of Public Works

Sandblasting Waste Management

- Instruct all on-site employees of the potential hazardous nature of sandblast grit and the possible symptoms of over-exposure to sandblast grit.
- Instruct operators of sandblasting equipment on safety procedures and personal protection equipment.
- Instruct operators on proper procedures regarding storage, handling and containment of sandblast grit.
- Instruct operators to recognize unfavorable weather conditions regarding sandblasting activities.
- Instruct operators and supervisors on current local, state and federal regulations regarding fugitive dust and hazardous waste from sandblast grit.
- Have weekly meetings with operators to discuss and reinforce proper operational procedures.
- Establish a continuing education program to indoctrinate new employees.

Materials Handling Recommendations
- Sandblast media should always be stored under cover away from drainage structures.
- Ensure that stored media or grit is not subject to transport by wind.
- Ensure that all sandblasting equipment as well as storage containers comply with current local, state and federal regulations.
- Refer to Hazardous Waste BMP for hazardous components.
- Capture and treat runoff which comes into contact with sandblasting material or waste.

Quality Assurance
- Foremen and/or construction supervisor should monitor all sandblasting activities and safety procedures.
- Educate and if necessary, discipline workers who violate procedures.
- Take all reasonable precautions to ensure that sandblast grit is not transported off-site or into drainage facilities.

Requirements
- Education and awareness program for all employees regarding control of sandblasting and potential dangers to humans and the environment.
- Operator and supervisor education program for those directly involved in sandblasting activities
- Instructions on material handling, proper equipment operation, personal protective equipment, fugitive dust control, record keeping and reporting.
- Proper sandblast equipment for the job.
- Site-specific fugitive dust control and containment equipment.
- Site-specific fugitive dust control procedures.
- Compliance by supervisors and workers.

Costs
- Minimal cost for training and monitoring.
- Potential for significant cost for containment procedures on large jobs.
- Potential for significant costs associated with cleanup, correction and remediation if contamination occurs.

BMP 25

Department of Public Works

Sanitary/Septic Waste Management

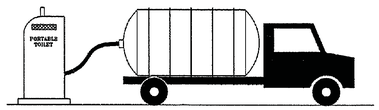

DESCRIPTION
Prevent or reduce the discharge of pollutants to storm water from sanitary/septic waste by providing convenient, well-maintained facilities, and arranging for regular service and disposal.

APPLICATIONS
This BMP is

DESIGN CRITERIA
- Sanitary or septic wastes should be treated or disposed of in accordance with State and local requirements.
- Locate sanitary facilities in a convenient location.
- Untreated raw sewage should never be discharged or buried.
- Temporary septic systems should treat wastes to appropriate levels before discharging.
- If using an on-site disposal system (OSDS), such as a septic system, contact the
- If discharging to the sanitary sewer, contact the local sewage treatment plant for their requirements.
- Sanitary/septic facilities should be maintained in good working order by a licensed service.
- Arrange for regular waste collection by a licensed hauler before facilities overflow.

LIMITATIONS
There are no major limitations to this best management practice.

MAINTENANCE REQUIREMENTS
Inspect facilities regularly. Arrange for regular waste collection.

Applications
Perimeter Control
Slope Protection
Sediment Trapping
Channel Protection
Temporary Stabilization
Permanent Stabilization
Waste Management
Housekeeping Practices

Targeted Constituents
- ○ Sediment
- ● Nutrients Toxic Materials
- ○ Oil & Grease
- ○ Floatable Materials
- ○ Other Construction Wastes

Implementation Requirements
- ○ Capital Costs
- ◒ Maintenance
- ◒ Training
- ○ Suitability for Slopes >5%

Legend
- ● Significant Impact
- ◒ Medium Impact
- ○ Low Impact
- ? Unknown or Questionable Impact

BMP 27

City of Baton Rouge Parish of East Baton Rouge

Department of Public Works

Pipe Slope Drain

Manning's equation, but in no case shall pipes be sized smaller than is shown in the following table:

Minimum Pipe Size	Maximum Contributing Drainage Area
12"	0.5 Acres
18"	1.5 Acres
21"	2.5 Acres
24"	3.5 Acres
30"	5.0 Acres

- Maximum drainage area for individual pipe slope drains shall be 5 acres. For areas larger than 5 acres, additional drains shall be added.
- Both the entrance and outfall of the pipe slope drain should be properly stabilized. Grass can normally be used at the entrance, but armor type stabilization such as stone or concrete rip rap is normally required to address the high velocities of the outfall.
- An effectiveness rating is based on the ratio of storm water routed away from the slope and into the pipe drain versus the total area of the drainage basin. A minimum value of 0.40 and a maximum value of 0.85 is used for the rating.

LIMITATIONS
- Drains must be located away from construction areas since the drain can easily be damaged by construction traffic.
- Securing the pipe to the slope can be difficult and require significant maintenance during the life of the system.
- In situations where pipe slope drains convey sediment-laden runoff, pipes can become clogged during large rain events causing water to overtop the diversion dike thereby creating a serious erosion condition.
- Grading is normally required upstream of the pipe slope drain in order to direct flow into the system. This can cause additional cost and maintenance.
- A pipe slope drain reduces erosion but does not prevent it or reduce the amount of sediment in runoff. Additional measures should be used in conjunction with the pipe slope drain to treat the flow.

MAINTENANCE REQUIREMENTS
Inspection must be made of the pipe after each significant (>0.5 inch) rain event to locate and repair any damage to joints or clogging of the pipe. In cases where the diversion dike has deteriorated from around the entrance of the pipe, it may be necessary to reinforce the dike with sandbags or to install a concrete collar to prevent failure. Signs of erosion around the pipe drain should be addressed in a timely manner by stabilizing the area with erosion control mats, crushed stone, concrete or other acceptable method.

BMP 28

Department of Public Works

STATE OF LOUISIANA
THOMAS A. STEPHENS
License No. 19417
PROFESSIONAL ENGINEER
IN
CIVIL ENGINEERING
2/12/2008

STANDARD PLAN NO.	DATED	SHEET NO.
903–01	FEBRUARY 25, 2008	9 OF 11

STORM WATER POLLUTION PREVENTION PLAN BEST MANAGEMENT PRACTICES

DATE	DESCRIPTION REVISIONS	BY

ENGINEERING DIVISION
DEPARTMENT OF PUBLIC WORKS
CITY OF BATON ROUGE & PARISH OF EAST BATON ROUGE

DESIGNED	DRAWN	CHECKED	APPROVED
G. CHENG	G. VANNICE	G. CHENG	T. STEPHENS

903–01

PROJECT NO.	SHEET
12-CS-HC-0043	621

Permanent Structural Controls

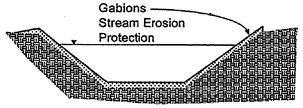

Applications
- Perimeter Control
- **Slope Protection**
- Sediment Trapping
- **Channel Protection**
- **Temporary Stabilization**
- **Permanent Stabilization**
- Waste Management
- Housekeeping Practices

Targeted Constituents
- ● Sediment
- ○ Nutrients / Toxic Materials
- ○ Oil & Grease
- ○ Floatable Materials
- ○ Other Construction Wastes

Implementation Requirements
- ● Capital Costs
- ◒ Maintenance
- ○ Training
- ● Suitability for Slopes >5%

Legend
- ● Significant Impact
- ◒ Medium Impact
- ○ Low Impact
- ? Unknown or Questionable Impact

BMP 29

City of Baton Rouge Parish of East Baton Rouge

Department of Public Works

DESCRIPTION
Permanent erosion techniques consist of a wide variety of erosion prevention methods including gabions, retaining walls, and rip rap. These are not included as individual BMPs since they go beyond construction phase measures and due to the fact that their use is widespread in the region and the variety of design factors influencing design.

PRIMARY USE
Permanent erosion control is required at the completion of the construction phase of the project. This includes permanent structural methods as well as non-structural methods such as vegetation.

APPLICATIONS
Due to high installation cost and long term maintenance, permanent structural methods should be used only when necessary to address severe erosive conditions. In certain instances however, retaining walls are an effective method to reduce site slopes, reducing runoff velocity. Gabions and concrete rip-rap are effective in reducing stream bank erosion under severe concentrated flow conditions and at pipe outfalls.

DESIGN CRITERIA
Most structural controls such as gabions and rip-rap are designed based on the velocity of flow and the size of the stone used. Project plans will address this as part of standard details. Specifications for rip rap will be provided in design specifications for stone size based on the design velocity of flow across the structure. Manufacturers' information addresses stone size along with basket dimensions for gabions.

Design of retaining walls is based on a variety of structural conditions including soil compressive strength, wall height and water table influence. Tables of dimensions for retaining walls based on site conditions are available from a variety of sources including the Concrete Reinforcing Steel Institute (CRSI).

A critical aspect with regards to the design of many permanent controls is adequate anchoring of the structure to prevent undermining of the

Temporary Sediment Tank

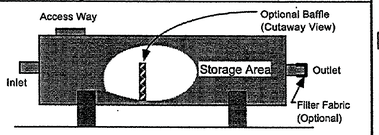

Applications
- Perimeter Control
- Slope Protection
- **Sediment Trapping**
- Channel Protection
- Temporary Stabilization
- Permanent Stabilization
- Waste Management
- Housekeeping Practices

Targeted Constituents
- ◒ Sediment
- ○ Nutrients / Toxic Materials
- ○ Oil & Grease
- ○ Floatable Materials
- ○ Other Construction Wastes

Implementation Requirements
- ● Capital Costs
- ● Maintenance
- ◒ Training
- ○ Suitability for Slopes >5%

Legend
- ● Significant Impact
- ◒ Medium Impact
- ○ Low Impact
- ? Unknown or Questionable Impact

BMP 30

City of Baton Rouge Parish of East Baton Rouge

Department of Public Works

DESCRIPTION
A temporary sediment tank (TST) is a large truck mounted tank used to hold sediment laden water to provide for sedimentation and filtration. For smaller applications, 55 gallon drums or other water tight container can be used for storage. Water is pumped into the tank where it is detained. If desired an outlet with a geofabric filter can be provided to release the flow after a period of detention.

PRIMARY USE
A TST is typically used at construction sites in urban areas where conventional methods of sediment removal (e. g., sediment traps, sediment basins) are not practical.

APPLICATIONS
Applications for a TST include utility construction in confined areas (such as a business district or large developed area) or localized construction in which other BMPs are not required such as small, depressed construction (tank farms). This includes pumpage from excavation in heavily developed areas, such as a central business district, with flows due to groundwater or runoff entering the trench or excavated area.

DESIGN CRITERIA
- A TST can be used as either a sedimentation or filtration device. If an oil sheen is present in the runoff, additional treatment will be required before release of runoff.
- For use as a small scale sedimentation basin, de-watering discharge is directed into the TST to a level below the tank midpoint and held for a minimum of 2 hours to allow settlement of a majority of the suspended particles. The tank should be designed for a controlled release when the contents of the tank reach a level higher than the midpoint. When sediment occupies 1/3 the capacity of the TST, it should be removed from the tank.
- As a filtration device, a TST is used for collecting de-watering discharge and flowing it through a filtered opening at the outlet of

Topsoiling

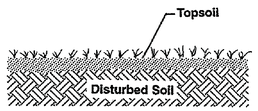

Applications
- Perimeter Control
- **Slope Protection**
- Sediment Trapping
- Channel Protection
- Temporary Stabilization
- **Permanent Stabilization**
- Waste Management
- Housekeeping Practices

Targeted Constituents
- ◒ Sediment
- ○ Nutrients / Toxic Materials
- ○ Oil & Grease
- ○ Floatable Materials
- ○ Other Construction Wastes

Implementation Requirements
- ◒ Capital Costs
- ◒ Maintenance
- ○ Training
- ◒ Suitability for Slopes >5%

Legend
- ● Significant Impact
- ◒ Medium Impact
- ○ Low Impact
- ? Unknown or Questionable Impact

BMP 31

City of Baton Rouge Parish of East Baton Rouge

Department of Public Works

STANDARD FOR TOPSOILING[1]

TOPSOILING

Definitions: Topsoiling is the stripping, storing and spreading of fertile topsoil over disturbed areas.

Purpose: Topsoiling will provide a more suitable soil medium if the existing or constructed surface is unfavorable for plant growth. Topsoiling will greatly increase the success of establishing good vegetations, help reduce soil erosion, and enhance the beauty of the development.

Conditions Where Practices Applies:

Topsoiling is Used Where:

- The texture and quality of the exposed subsoil or parent material are not suitable for producing adequate vegetative growth.
- The soil material is so shallow that the rooting zone is not deep enough to support plants with continuing supplies of moisture and plant nutrients.
- The soil is extremely acidic or contains material toxic to plant growth.

Design Criteria

- **Topsoil Materials**
  The site should be explored to determine if there is sufficient surface soil of good quality to justify stripping. If

Permanent Structural Controls

foundation and washout of sediment at the edges of the structure. Where applicable, proper anchoring in the form of embedment or 'toe in' of the structure is required.

LIMITATIONS
The initial cost is an important consideration in selection of permanent structural controls.

Stream bank erosion protection such as rip rap provides limited protection unless used extensively due to the potential for erosion at the edges of the rip rap.

MAINTENANCE REQUIREMENTS
Most stone or concrete structures require little maintenance, but may be subject to vandalism. As mentioned above, erosion around the structure may undermine the integrity of the structure. When maintenance is required, it is typically very extensive and costly.

BMP 29

Department of Public Works

Temporary Sediment Tank

the tank to reduce suspended sediment volume. The filter opening in the TST should have an EOS (see silt fence BMP) of 70 or smaller.

LIMITATIONS
This is a specialized technique for the situations listed. It is not cost effective for normal sediment removal conditions.

The use of a temporary sediment tank is limited by the capacity of the tank, the time required for settlement of suspended material, and disposal of the water and the sediment.

MAINTENANCE REQUIREMENTS
The temporary sediment tank should be inspected periodically during and after use. A tank should be cleaned out when it becomes 1/3 full of sediment.

BMP 30

Department of Public Works

Topsoiling

additional off-site topsoil is needed, it should meet the following standards as well:

- Topsoil should be friable and loamy (loam, sandy loam, silt loam, sandy clay loam, clay loam).
- Topsoil should be free of debris, objectionable weeds and stones, and contain no toxic substances that may be harmful to plant growth.
- Organic matter content should not be less than 0.75 percent by weight; pH range should be from 5.0 - 7.5.

- **Stripping and Stockpiling**
  Stripping should be confined to the immediate construction area. A 4-6 inch stripping depth is common, but may vary depending on the particular soil.

  Topsoil should be stockpiled so that natural drainage is not obstructed and off-site sediment damage does not occur. stockpile sideslopes should not exceed 2:1. A perimeter dike with a outlet or straw bale barriers should surround the stockpiles. Temporary seeding should be completed within 15 days of stockpile formation.

- **Site Preparation**
  When topsoiling, maintain needed erosion control practices such as diversion dikes, sediment basins, waterways, etc.

  Grading - Grades on the areas to be topsoiled, which have been previously established, should be maintained.

  Liming - Where the pH of the subsoil is .0 or less or the soil is composed of heavy clays, agricultural lime be spread in accordance with the soil test on the vegetative establishment practice being used.

BMP 31

Department of Public Works

DATE	DESCRIPTION REVISIONS	BY

STATE OF LOUISIANA
THOMAS A. STEPHENS
License No. 15417
PROFESSIONAL ENGINEER
IN
CIVIL ENGINEERING
2/14/2013

STANDARD PLAN NO.	DATED	SHEET NO.
903–01	FEBRUARY 25, 2008	10 OF 11

STORM WATER POLLUTION PREVENTION PLAN
BEST MANAGEMENT PRACTICES

ENGINEERING DIVISION
DEPARTMENT OF PUBLIC WORKS
CITY OF BATON ROUGE & PARISH OF EAST BATON ROUGE

DESIGNED	DRAWN	CHECKED	APPROVED
G. CHENG	G. VANNICE	G. CHENG	T. STEPHENS

903–01

PROJECT NO.	SHEET
12-CS-HC-0043	622

Topsoiling

Bonding - After and immediately prior to dumping and spreading the topsoil, the subgrade should be loosened by disking and scarifying to a depth of at least two inches to insure bonding of the topsoil and subsoil.

- **Applying Topsoil**
  Topsoil should be handled when it is dry enough to work without damaging soil structure. A uniform application of 4 to 6 inches unsettled should be made.

  No sod or seed should be placed on soil which has been treated with soil sterilants until sufficient time has elapsed to permit dissipation of toxic materials.

General Notes

There are advantages and disadvantages in topsoiling:

- Stripping, stockpiling, reapplying or importing topsoil may not always be cost-effective. Topsoiling can delay seeding or sodding operations and increase the exposure time of denuded areas. Also, most topsoils contain weed seeds, and weeds may compete with desirable species.

- On the other hand, the advantages of topsoil include its high organic matter content, friable nature, water-holding capacity, and nutrient content, which makes it an excellent medium for growth and greatly reduces chances of failure.

Further, preparing a seedbed in subsoil may be considered instead of topsoiling, as some subsoils may provide a good growth medium which is generally free of weed seeds.

If topsoiling is to be done, it should be determined if an adequate volume of topsoil exists on the site. The stockpile should be located for proper non-erosive drainage and such that it does not interfere with work on the site. Sufficient time should be allowed for spreading and bonding topsoil

BMP
31
Department of Public Works

Topsoiling

prior to seeding, sodding or planting; topsoil and subsoil should be properly bonded. Topsoil should not be applied to a subsoil with contrasting texture (as a clay) unless the surface of the subsoil is scarified to provide a good bond with the topsoil.

BMP
31
Department of Public Works

STATE OF LOUISIANA
THOMAS A. STEPHENS
License No. 15417
PROFESSIONAL ENGINEER
IN
CIVIL ENGINEERING
2/14/2013

STANDARD PLAN NO.	DATED	SHEET NO.
903–01	FEBRUARY 25, 2008	11 OF 11

STORM WATER POLLUTION PREVENTION PLAN
BEST MANAGEMENT PRACTICES

ENGINEERING DIVISION
DEPARTMENT OF PUBLIC WORKS
CITY OF BATON ROUGE & PARISH OF EAST BATON ROUGE

DESIGNED	DRAWN	CHECKED	APPROVED
G. CHENG	G. VANNICE	G. CHENG	T. STEPHENS

DATE	DESCRIPTION REVISIONS	BY

PROJECT NO.	SHEET
12-CS-HC-0043	623

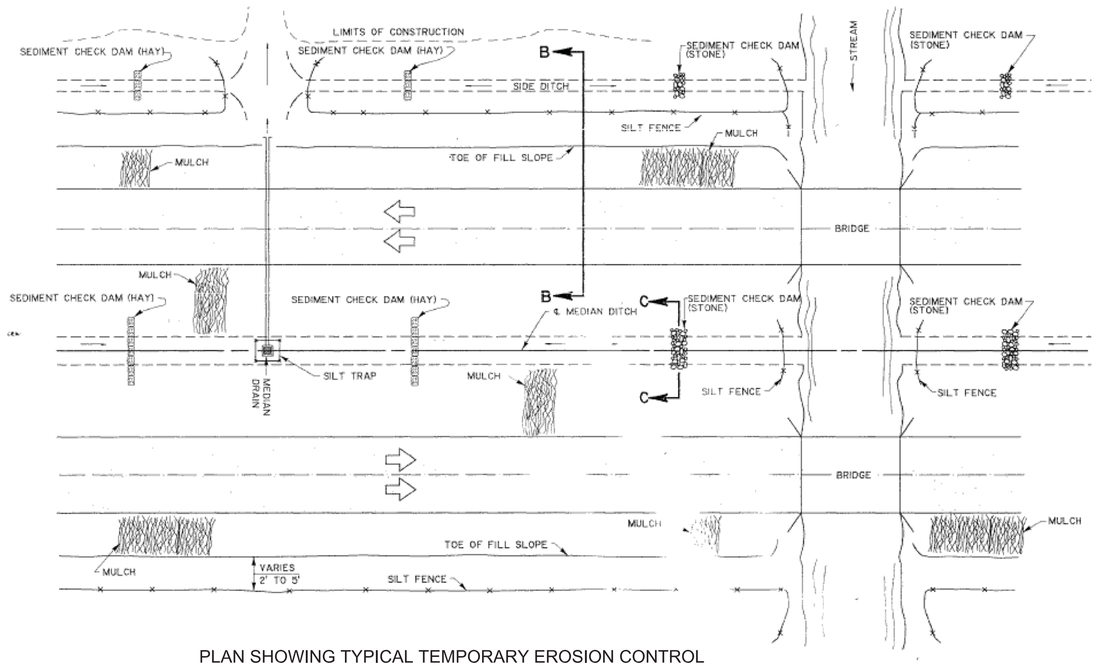

PLAN SHOWING TYPICAL TEMPORARY EROSION CONTROL

MULCHES:
Mulches are the application of mats of material placed on the soil surface to prevent erosion by protecting the soil surface from raindrop impact and to reduce the velocity of overland flow. Mulches can be organic or synthetic. Mulches shall be in accordance with the Standard Specifications for mulches. A few guidelines for the use of Mulches are:

1. Use on cut and embankment slopes which have not been completed to plan grade or where the weather or soil conditions will not permit completing them within a reasonable time;
2. Use on cleared, grubbed, and scalped areas where soil erosion is likely to occur;
3. Use with temporary seeding.

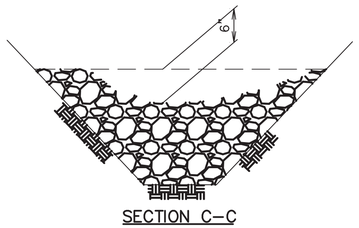

SECTION C–C

TEMPORARY SEDIMENT CHECK DAM (STONE)

NOTES:
A stone check dam is a small temporary dam constructed across a swale or drainage ditch. The purpose of this measure is to reduce the velocity of concentrated stormwater flows, thereby reducing erosion of the of the swale or ditch. The stone check dam will trap small amounts of sediments generated in the ditch itself, however it should not be used as a sediment trapping device. A few basic design guidelines for the use of Stone Check Dams are:

1. Use in small open channels which drain 10 acres or less;
2. Do not use in a live stream;
3. Use in a temporary ditch or swale which, because of their short length of service, cannot receive a non–erodible lining;
4. Use in permanent ditches or swales which will not receive a permanent lining for an extended period of time;
5. use in temporary or permanent ditches or swales which need protection during the establishment of grass linings.
6. For stone specifications, see Section 705, 2lb class.

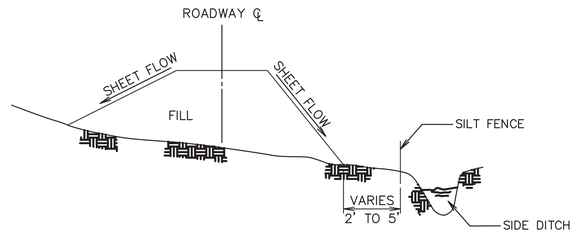

SECTION B–B

TEMPORARY SILT FENCE APPLICATION

(FOR CONSTRUCTION DETAILS AND SPECIFICATIONS SEE SHEET 2 OF 2)

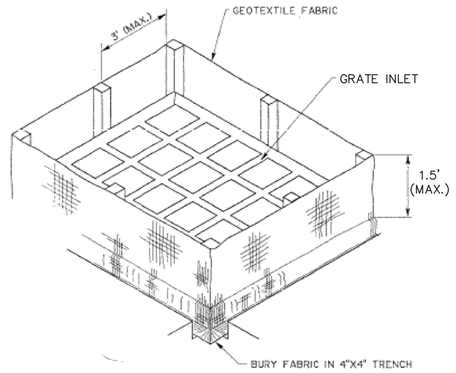

ISOMETRIC VIEW SHOWING GEOTEXTILE FABRIC

(BACKFILL SOIL NOT SHOWN)

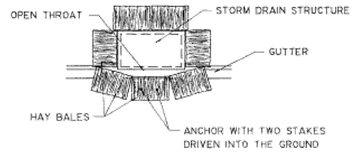

PLAN SHOWING HAY BALES

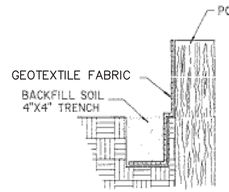

SECTION THRU TRENCH SHOWING GEOTEXTILE FABRIC

NOTES:
The temporary drop inlet silt trap is to be used for small drainage areas (less than 1 acre) where the storm drain is functional before the area is stabilized. The trap can be either geotextile fabric or hay bales.

1. Wooden stakes supporting the fabric shall be 2" X 2" or 2" X 4" with a minimum length of 3 feet. The stakes shall be spaced around the inlet at a maximum spacing of 3 feet;
2. The height of the fabric above the inlet shall be limited to 1.5' and the bottom of the fabric shall be buried in a trench approximately 4" wide by 4" deep. The fabric shall be stapled to the post with ½" staples;
3. The trap should be inspected regularly after each storm. The sediment should be removed and make sure each stake is firmly in the ground.
4. The geotextile fabric shall conform to Type F or G as per Standard Specifications.

TEMPORARY INLET SILT TRAP

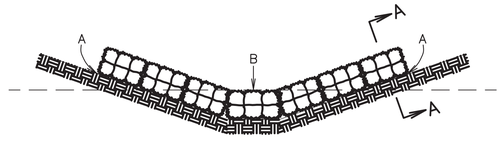

POINTS A SHOULD BE HIGHER THAN POINT B.

ELEVATION

TEMPORARY SEDIMENT CHECK DAM (HAY)

NOTES:
A hay bale barrier is a temporary sediment barrier consisting of a row of entrenched and anchored bales of straw or hay. The hay bale barrier is also used as a check dam to reduce the velocity in small ditches or swales. A few basic design guidelines for the use of a Hay Bale Barrier are:

1. Use where erosion would occur in the form of sheet and rill erosion;
2. Use in minor swales or ditches where the maximum drainage area is 2 acres;
3. Only use where the effectiveness is required for less than 3 months;
4. Do not use in live streams or in swales or ditches where there is a possibility of a washout.

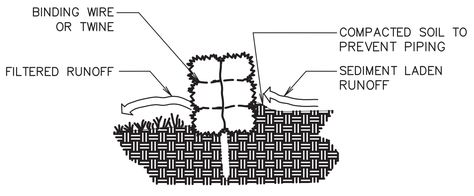

SECTION A–A

LADOTD Standard Plan EC-01 has been adopted with modifications for use by the City/Parish as Standard Plan 903-02.

STATE OF LOUISIANA
THOMAS A. STEPHENS
License No. 19417
PROFESSIONAL ENGINEER
IN
CIVIL ENGINEERING
3/16/2015

DATE	DESCRIPTION REVISIONS	BY

STANDARD PLAN NO.	DATED	SHEET NO.
903–02	November 28, 2009	1 OF 2

TEMPORARY EROSION CONTROL INSTALLATION DETAILS

ENGINEERING DIVISION
DEPARTMENT OF PUBLIC WORKS
CITY OF BATON ROUGE & PARISH OF EAST BATON ROUGE

DESIGNED	DRAWN	CHECKED	APPROVED
G. L. P.	G. VANNICE	G. L. P.	T. STEPHENS

PROJECT NO.	SHEET
12-CS-HC-0043	624

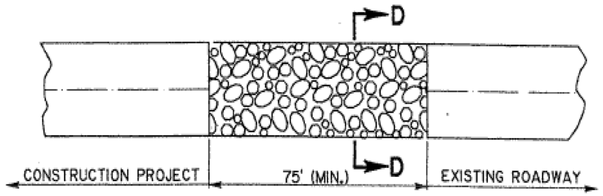

PLAN



SECTION D–D

TEMPORARY STONE CONSTRUCTION ENTRANCE

PAY AS SPECIAL ITEM, TEMPORARY STONE CONSTRUCTION ENTRANCE

NOTES:
TEMPORARY STONE CONSTRUCTION ENTRANCE AND/OR WASH RACK

A stone stabilized pad located at points of vehicular ingress and egress on the construction site to reduce the amount of mud transported onto public roads. If the action of the vehicle traveling over the gravel pad is not sufficient to remove the majority of the mud, then the tires must be washed before the vehicle enters a public road. A few basic design guidelines for the use of a Stone Construction Entrance and/or Wash Racks are:

1. The stone layer must be a least 6 inches thick;
2. The length of the pad must be at least 75 feet and it must extend the Width of the vehicular ingress and egress;
3. A geotextile fabric underliner is required. The geotextile fabric shall be Type D or per the Standard Specifications;
4. If a wash rack is necessary, provisions must be made to intercept the wash Water and trap the sediment before it is carried off–site.
6. For stone specifications, see Section 705, 2lb class.

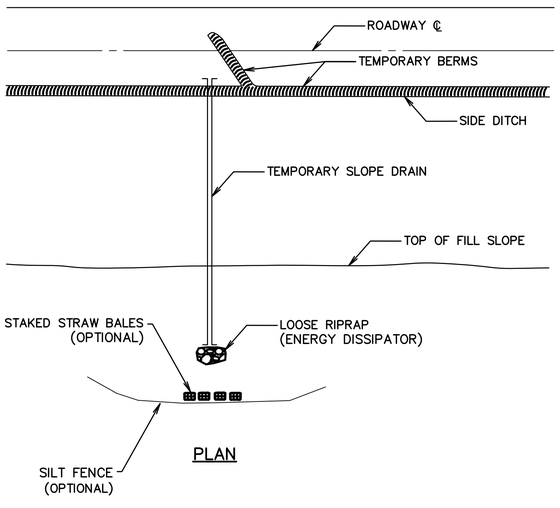

PLAN

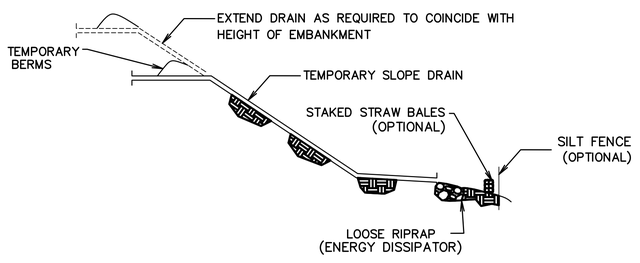

ELEVATION

TEMPORARY SLOPE DRAIN

NOTES:
A temporary slope drain is a device used to carry water from the construction work area to a lower elevation. Slope drains may be plastic sheets, metal or plastic pipe, stone gutters, fiber mats, or concrete or asphalt ditches. A few basic design guidelines for the use of a Temporary Slope Drain are:

1. The spacing of the slope drains varies with the road grade.
   For Grades: 0.0% – 2.0% use 500' spacing
   2.1% – 5.0% use 200' spacing
   Greater than 5.0% use 100' spacing
2. Slope drain material: Smooth pipe – 8"minimum
   Corrugated pipe –12"minimum
   Plastic sheeting –4'wide minimum
   Plastic sheeting –3 mils thick minimum
3. Plastic sheeting can be staked down or weighted with rocks or Logs. The area under the sheeting should be shaped to provide an adequate channel.
4. The outlet end should be protected or have some means of dissipating energy. The flow should be directed through a sediment trap such as silt fence or hay bales.
5. To insure proper operation, temporary slope drains should be inspected regularly and after each storm, for clogging or displacement. Erosion at the outlet should be checked and the slit traps cleaned if necessary.

1. SET POSTS AND EXCAVATE A 4" X 4" TRENCH UPSLOPE ALONG THE LINE OF POSTS.

2. STAPLE WIRE FENCING TO THE POSTS.

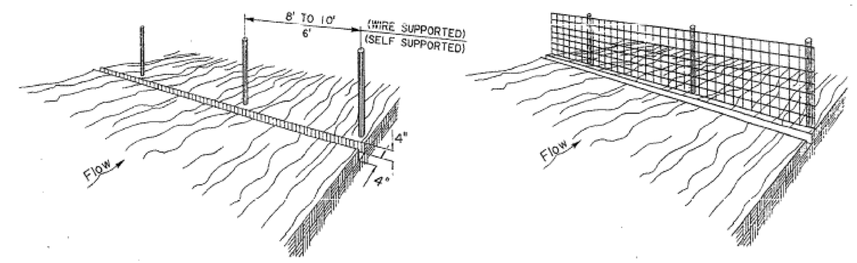

3. ATTACH THE FILTER FABRIC TO THE WIRE FENCE AND EXTEND IT INTO THE TRENCH.

4. BACKFILL AND COMPACT EXCAVATED SOIL.

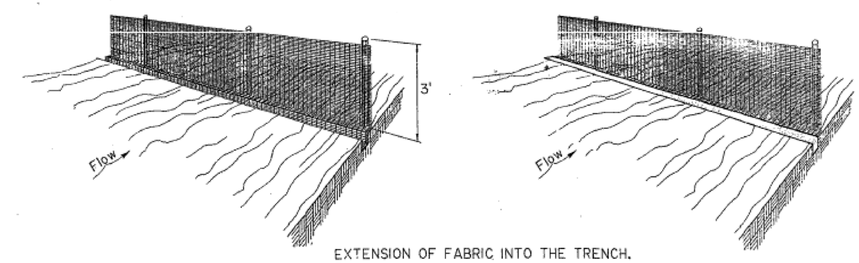

EXTENSION OF FABRIC INTO THE TRENCH.

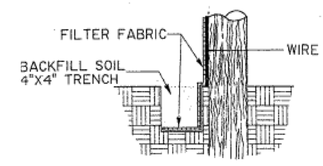

CONSTRUCTION OF TEMPORARY SILT FENCING

(WIRE SUPPORTED SILT FENCE IS SHOWN. SELF SUPPORTED SILT FENCE WILL BE CONSTRUCTED ACCORDING TO MANUFACTURERS SPECIFICATIONS.)

NOTES:
Silt fencing is a temporary sediment barrier consisting of a filter fabric support by post and stretched across an area to intercept and detain small amounts of sediment. Silt fencing shall be in accordance with Section 903 of the Standard Specifications. A few basic guidelines for the use of Silt Fencing are:

1. Use where erosion would occur in the form of sheet and rill Erosion;
2. Use where the maximum drainage area behind the silt fence is ¼ acre per 100 feet of silt fence length;
3. Use where the maximum slope length behind the barrier is 100 feet;
4. Use where the maximum gradient behind the barrier is 2:1;
5. Do not use silt fences in live streams or in ditches or swales where flows exceed one cubic foot per second.

STATE OF LOUISIANA
THOMAS A. STEPHENS
License No. 19417
PROFESSIONAL ENGINEER
IN
CIVIL ENGINEERING
8/14/2012

DATE	DESCRIPTION REVISIONS	BY

STANDARD PLAN NO.	DATED	SHEET NO.
903–02	November 28, 2009	2 OF 2

TEMPORARY EROSION CONTROL INSTALLATION DETAILS

ENGINEERING DIVISION
DEPARTMENT OF PUBLIC WORKS
CITY OF BATON ROUGE & PARISH OF EAST BATON ROUGE

DESIGNED	DRAWN	CHECKED	APPROVED
G. L. P.	G. VANNICE	G. L. P.	T. STEPHENS

PROJECT NO.	SHEET
12-CS-HC-0043	625

The Side Road Work Ahead sign shall be used in advance of an intersection where the construction project on the side road approach terminates at the crossing.



36" x 36"
Legend 5" Series C

SIDE ROAD WORK AHEAD SIGN

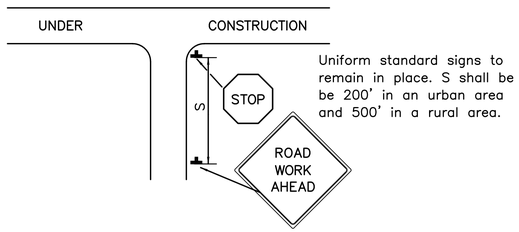

Uniform standard signs to remain in place. S shall be be 200' in an urban area and 500' in a rural area.

SIGNING FOR SIDE ROAD APPROACH TO CONSTRUCTION PROJECT

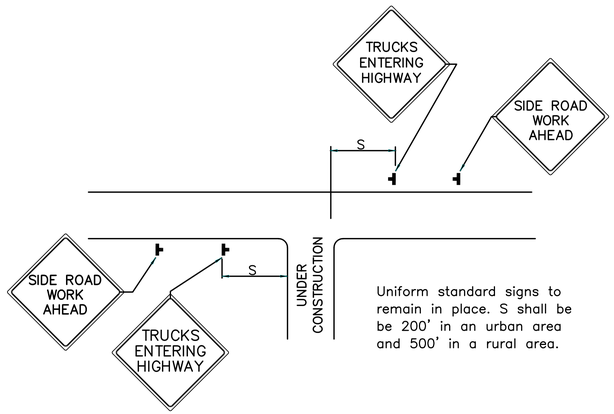

Uniform standard signs to remain in place. S shall be be 200' in an urban area and 500' in a rural area.

SIDE ROAD WORK

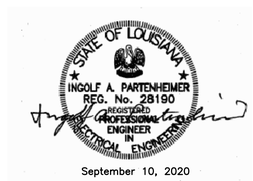

September 10, 2020

This sheet shall be used with Standard Plan No. 905–01 and 905–02.

DATE	DESCRIPTION REVISIONS	BY

STANDARD PLAN NO.	DATED	SHEET NO.
905–30	JULY 3, 2019	1 OF 1

TEMPORARY TRAFFIC CONTROL LOCAL APPLICATIONS

ENGINEERING DIVISION
DEPARTMENT OF TRANSPORTATION AND DRAINAGE
CITY OF BATON ROUGE & PARISH OF EAST BATON ROUGE

DESIGNED	DRAWN	CHECKED	APPROVED
MUTCD	G. CHENG	S. EDEL	I. PARTENHEIMER

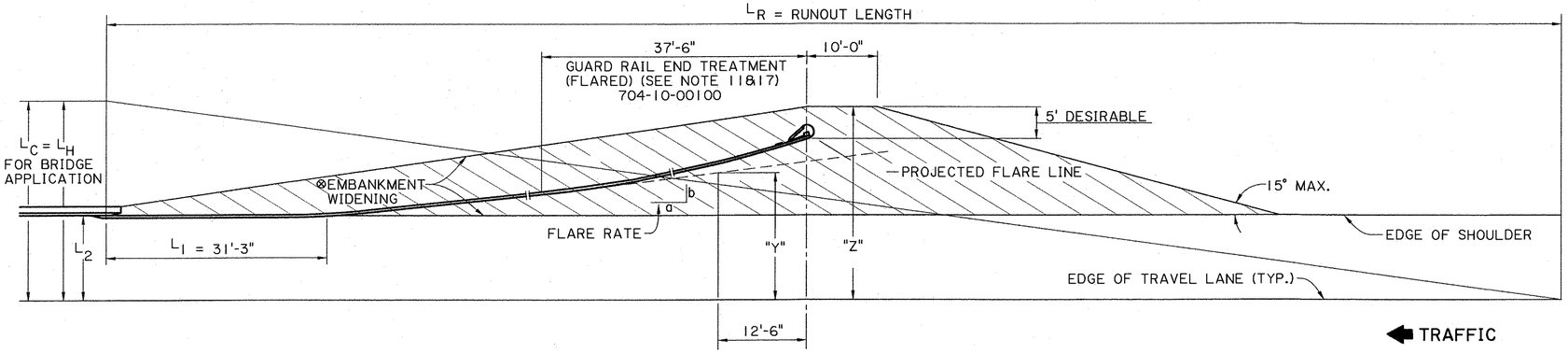

APPROACH GUARD RAIL VARIABLES-PLAN
N.T.S.

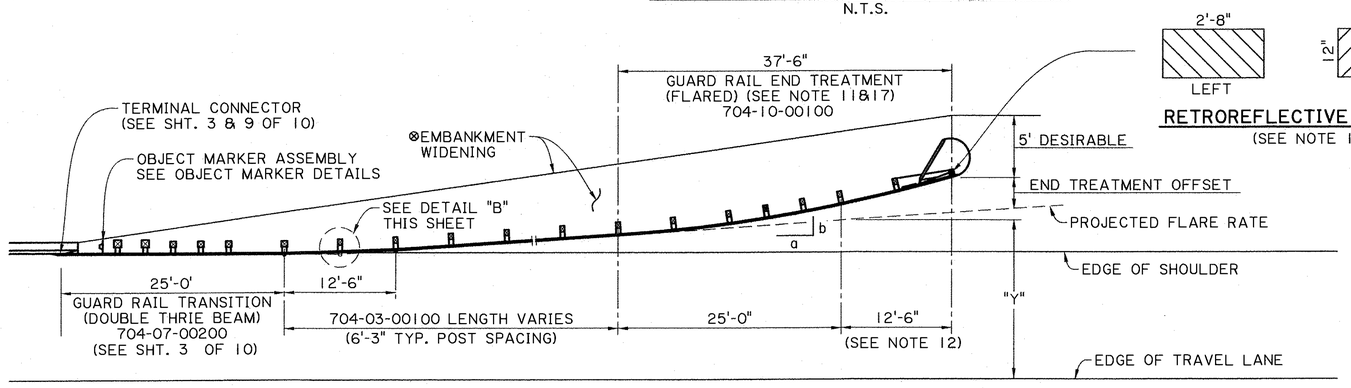

RETROREFLECTIVE SHEETING
(SEE NOTE 13)

TYPICAL BRIDGE GUARD RAIL TREATMENT-PLAN
N.T.S.

TRAFFIC

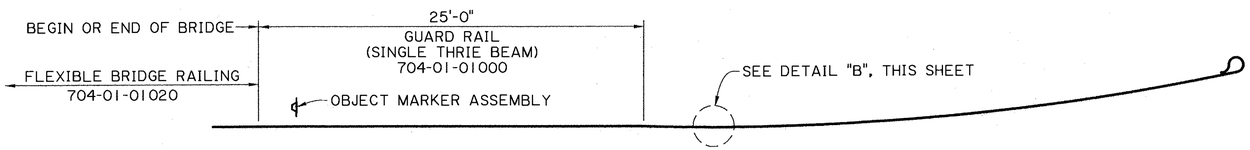

BEAM TRANSITION FOR FLEXIBLE BRIDGE RAILING-PLAN (SEE NOTE 15)
N.T.S.

THESE STANDARD PLANS HAVE BEEN PROPERLY EXAMINED BY ME, THE UNDERSIGNED PROFESSIONAL ENGINEER, I HAVE DETERMINED THAT THESE PLANS COMPLY WITH ALL APPLICABLE CODES AND HAVE BEEN PROPERLY ADAPTED TO USE ON THIS PROJECT.

STATE OF LOUISIANA
GERALD G. MENARD
License No. 20437
PROFESSIONAL ENGINEER
IN
CIVIL ENGINEERING
9/19/2016

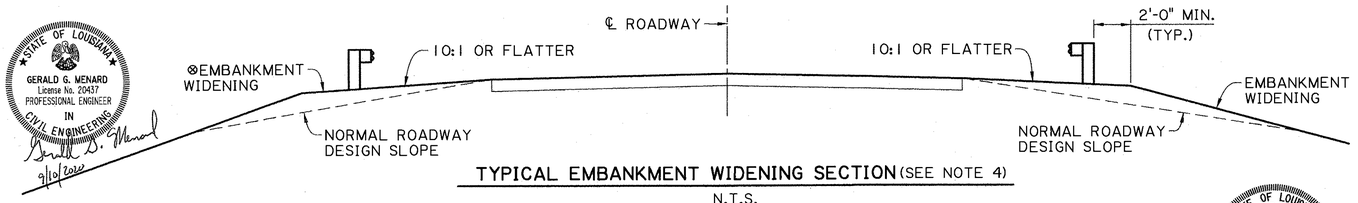

TYPICAL EMBANKMENT WIDENING SECTION (SEE NOTE 4)
N.T.S.

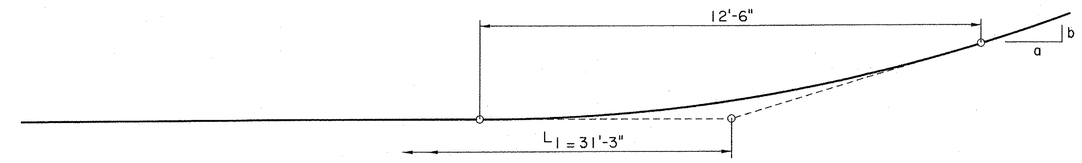

DETAIL "B"

STATE OF LOUISIANA
PAUL B. FOSSIER, JR
License No. 21028
PROFESSIONAL ENGINEER
IN
CIVIL ENGINEERING
5-31-17

GUARD RAIL PAY ITEMS

704-01-01000	GUARD RAIL (SINGLE THRIE BEAM) (3'-1½" POST SPA.)
704-01-01020	GUARD RAIL (SINGLE THRIE BEAM) (6'-3" POST SPA.)
704-01-02000	GUARD RAIL (DOUBLE THRIE BEAM) (3'-1½" POST SPA.)
704-01-02020	GUARD RAIL (DOUBLE THRIE BEAM) (6'-3" POST SPA.)
704-03-00100	BLOCKED OUT GUARD RAIL
704-05-00100	GUARD RAIL ANCHOR SECTIONS (TRAILING END)
704-05-00200	GUARD RAIL ANCHOR SECTIONS (TRAILING END) (SINGLE THRIE BEAM)
704-06-00200	GUARD RAIL BRIDGE ATTACHMENTS (SINGLE THRIE BEAM)
704-07-00200	GUARD RAIL TRANSITIONS (DOUBLE THRIE BEAM)
704-10-00100	GUARD RAIL END TREATMENT (FLARED)
704-10-00105	GUARD RAIL END TREATMENT (FLARED, 12'-6" LENGTH)
704-10-00200	GUARD RAIL END TREATMENT (TANGENT)
704-10-00300	GUARD RAIL END TREATMENT (BI-DIRECTIONAL)
810-06-00100	CONCRETE PIER PROTECTION SYSTEM (VEHICLE)

GENERAL NOTES

1. LENGTH OF NEED (X) AND OFFSETS "Y" & "Z" SHALL BE COMPUTED IN ACCORDANCE WITH THE EQUATION ON SHEETS 2 OF 10. (X) DIMENSIONS TO BE USED SHALL BE A MULTIPLE OF 6'-3". TO FIND THE REQUIRED LENGTH OF NEED (X) WHEN OFFSET "Y" HAS TO BE SET, USE THE EQUATION X = (LH-"Y") LR/LH.
2. MINIMUM LENGTH OF GUARD RAIL IN ANY CASE SHALL BE 75'-0" (LENGTH OF NEED X= 62'-6"), FOR END TREATMENT SYSTEMS LESS THAN 50'-0", THE REMAINING LENGTH TO MEET THE 75'-0" MIN. WILL BE BASED ON USING ADDITIONAL W-BEAM BLOCKED OUT GUARD RAIL 704-03-00100 PLACED BETWEEN THE TRANSITION AND END TREATMENT. THE COST OF ADDITIONAL W-BEAM GUARD RAIL SHALL BE PAID FOR UNDER THE END TREATMENT PAY ITEM.
3. SEE TYPICAL INSTALLATION ELSEWHERE IN THESE PLANS.
4. EMBANKMENT WIDENING TO PROVIDE SLOPES NOT STEEPER THAN 10:1 IS REQUIRED TO MAINTAIN PROPER RAIL TO VEHICLES POSITION. WIDENING MAY BE ACCOMPLISHED AS DETERMINED BY THE DESIGNER OR THE PROJECT ENGINEER.
5. SEE OPPOSING TRAFFIC GUARD RAIL REQUIREMENTS ON SHEET 2 OF 10 FOR METHOD OF CALCULATING LENGTH OF NEED (X) AND OFFSET (Y) OF RAIL LEFT SIDE WHEN TRAFFIC IS TWO WAY.
6. PAY ITEMS FOR ALL GUARD RAIL COMPONENTS ARE TO BE IN ACCORDANCE WITH LAYOUT DETAILS AND/OR QUANTITY TABLES FURNISHED WITH PROJECT PLANS. GUARD RAIL PAY ITEMS SHALL INCLUDE ALL MATERIALS, LABOR AND EQUIPMENT REQUIRED TO COMPLETE THE GUARD RAIL INSTALLATION AS SHOWN ON THE PLANS.
7. LONGITUDINAL DIMENSIONS FOR GUARD RAIL ARE MEASURED ALONG THE FACE OF RAILING
8. THE QUANTITY FOR THE EMBANKMENT WIDENING AT BRIDGE ENDS IS INCLUDED IN THE EMBANKMENT QUANTITY OF THE ROADWAY.
9. FOR BRIDGES WITH GUARD RAILS IN URBAN AREAS WITH DESIGN SPEED OF 45 mph OR LESS, SEE DOTD EDSM NO. II. 3.1.4 FOR DESIGN INFORMATION.
10. FOR GUARD RAIL INFORMATION FOR EXISTING HIGHWAYS, SEE DOTD EDSM No. II. 3.1.3 FOR DESIGN INFORMATION.
11. A TANGENT END TREATMENT (704-10-00200) MAY BE USED AS AN ALTERNATE TO THE FLARED END TREATMENT. A ZERO END TREATMENT OFFSET AND A ZERO FLARE RATE (A/B = 0) IS REQUIRED WHEN THE TANGENT END TREATMENT IS USED AND THE LENGTH OF NEED "X" SHALL BE CALCULATED BASED ON A "ZERO" FLARE RATE.
12. THE POINT WITHIN THE GUARD RAIL END TREATMENT WHERE LENGTH OF NEED TERMINATES MAY VARY WITH EACH TYPE OF GUARD RAIL END TREATMENT. THE 12'-6" LENGTH APPLIES TO MOST END TREATMENT. HOWEVER, REGARDLESS OF THE TYPE OF END TREATMENT USED, THIS POINT SHALL BE LOCATED AT THE SAME STATION ON THE ROADWAY.
13. THE RETROREFLECTIVE ADHESIVE SHEETING (12" X 2'-8") (TYPE III HIGH INTENSITY OBJECT MARKER PATTERN) SHALL BE APPLIED TO NOSE AFTER CURVING. SEE SECTION 1015 OF THE LATEST LA. STD. SPECS. FOR ROADS AND BRIDGES FOR SPECIFICATIONS AND THE SHEETING MANUFACTURERS RECOMMENDATIONS FOR INSTALLATION. FOR PATTERN DETAIL, SEE OBJECT MARKER DETAILS.
14. UNLESS OTHERWISE NOTED, ALL GUARD RAIL COMPONENTS SHALL CONFORM TO THE REQUIREMENTS OF THE AASHTO-AGC-ARTBA JOINT COOPERATIVE COMMITTEE, "A GUIDE TO STANDARDIZED HIGHWAY BARRIER RAIL HARDWARE", CURRENT EDITION.
15. 704-01-01000 IS USED IN LIEU OF 704-07-00200 FOR BRIDGES WITH FLEXIBLE BRIDGE RAILING (REINFORCED CONCRETE BRIDGE RAILING IS CONSIDERED TO BE RIGID.)
⊗16. GUARD RAIL INSTALLATIONS MAY BE PAVED BY USING INCIDENTAL CONCRETE PAVING (4"THICK) (706-03-00100) OR 4" MIN. ASPHALTIC CONCRETE. THE INCIDENTAL CONCRETE OR ASPHALT WILL BE USED IF A LAYOUT DETAIL, PAY ITEM AND QUANTITY IS INDICATED IN THE PLANS. SEE SHEET 10 FOR REQUIRED POST DETAILS WHEN PAVING IS USED AROUND POSTS.
17. GUARDRAIL END TREATMENT SHALL BE SELECTED FROM THE DOTD APPROVED MATERIALS LIST (AML) UNLESS OTHERWISE NOTED IN THE PLANS.

SHEET NUMBER	650

PARISH	FEDERAL PROJECT	STATE PROJECT

DESIGNED P. FOSSIER	DETAILED C. OWENS	DATE MAR. 2015
CHECKED K. BRAUNER	CHECKED P. FOSSIER	SHEET 1 OF 10

BY	REVISION DESCRIPTION	DATE
K.M.B.	UPDATED FOR 2016 SPECIFICATIONS	2-14-17
P.F.	ADDED NOTE NO. 17 AND REVISED PAY ITEMS	3-2-15

DATE: 6-13-2017
APPROVED BY CHIEF ENGINEER: Travis P. Williams

HIGHWAY GUARD RAILS

GR-200

BRIDGE AND STRUCTURAL DESIGN

5/30/2017 14:02

IP_PWP:d0684422\BD.1.1.1.0.01_gr_200.dgn

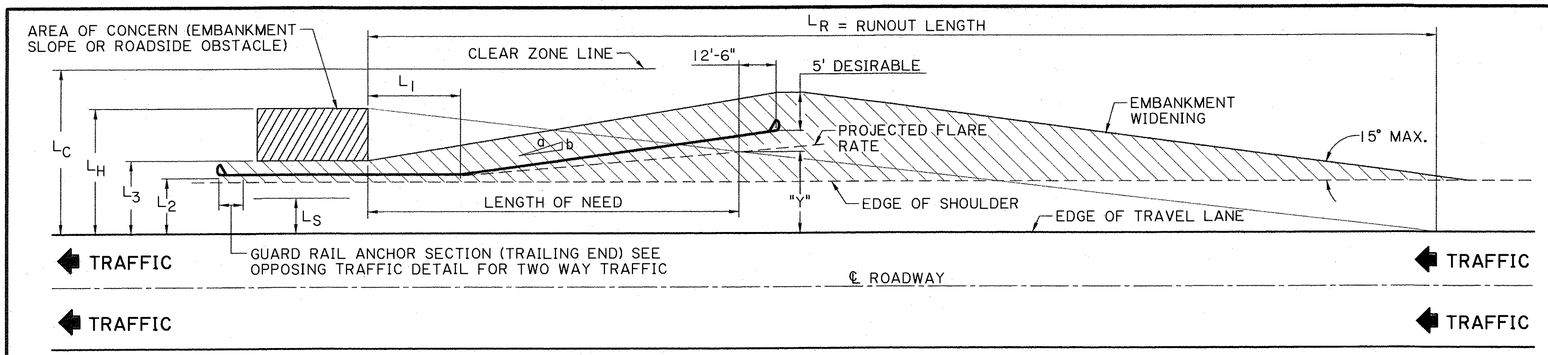

APPROACH TRAFFIC GUARD RAIL REQUIREMENTS-PLAN

N.T.S.

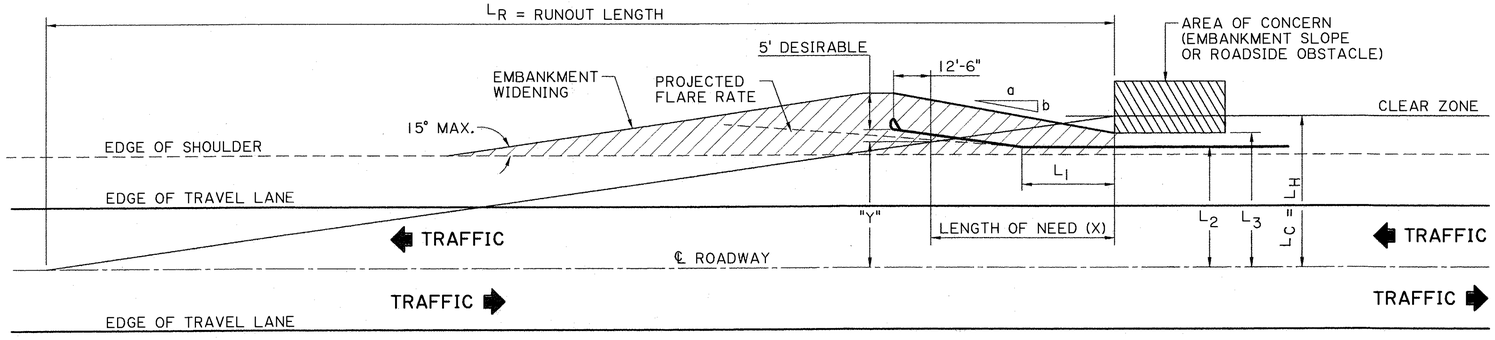

OPPOSING TRAFFIC GUARD RAIL REQUIREMENTS-PLAN

N.T.S.

NOTES:

1. ON TWO-WAY TRAFFIC "Y" IS MEASURED FROM THE CENTERLINE OF THE ROADWAY TO THE GUARD RAIL FOR THE OPPOSING TRAFFIC. THEREFORE, "Y" FOR GUARD RAIL ON THE LEFT SIDE OF A BRIDGE WITH TWO-WAY TRAFFIC IS MEASURED FROM THE CENTERLINE OF THE ROADWAY.
2. EQUATIONS FOR COMPUTING LENGTH OF NEED (X) AND OFFSETS (Y&Z). (ALL DIMENSIONS ARE IN FEET)

$$X = \frac{L_H + (\frac{b}{a})(L_1) - (L_2)}{(\frac{b}{a}) + (\frac{L_H}{L_R})} \qquad "Y" = L_H - (\frac{L_H}{L_R})(X)$$

$$"Z" = "Y" + \frac{b}{a}(12.5') + 9'$$

L_1 = LENGTH OF TANGENT SECTION OF RAIL IN ADVANCE OF HAZARD.

L_2 = DISTANCE FROM EDGE OF TRAVEL LANE TO TANGENT SECTION OF RAIL.

L_3 = DISTANCE FROM EDGE OF TRAVEL LANE TO OBSTACLE. IF $L_3 > L_C$ NO GUARD RAIL IS REQUIRED FOR ONCOMING TRAFFIC.

L_R = RUNOUT LENGTH

L_C = REQUIRED CLEAR ZONE (TABLE 1)

L_H = IS THE DISTANCE FROM THE EDGE OF THE TRAVELED WAY (EOP) TO THE LATERAL EXTENT OF THE HAZARD.

$L_H = L_C$ FOR BRIDGE APPLICATION, EXCEPT IN SPECIAL CASES SEE SHEET 1 OF 10 FOR DETAILS.

L_S = SHY LINE DISTANCE MEASURED FROM TRAVEL LANE.

⊞ 3. FLARE RATES SHOWN FOR BARRIERS INSIDE THE SHY LINE ARE DESIRABLE RATES AND MAY BE WAIVED IF THE GUARD RAIL LENGTH BECOMES TOO LONG FOR A GIVEN SITUATION.

⊕ 4. SEE SHEET NO. 5 OF 10 FOR FORMULAS FOR COMPUTING GUARD RAIL IN A CURVE.

5. FOR FURTHER INFORMATION CONCERNING TABLES 1-4, REFERENCE LATEST EDITION OF AASHTO ROADSIDE DESIGN GUIDE.

TABLE 1
CLEAR ZONE DISTANCE (L_C)
(IN FEET FROM EDGE OF TRAVELED LANE)

SPEED (MPH)	DESIGN ADT	⊗ FORESLOPE		⊗ BACKSLOPE		
		6H:1V OR FLATTER	5H:1V TO 4H:1V	3H:1V	4H:1V TO 5H:1V	6H:1V OR FLATTER
40 OR LESS	UNDER 750	7 - 10	7 - 10	7 - 10	7 - 10	7 - 10
	750-1500	10 - 12	12 - 14	10 - 12	10 - 12	10 - 12
	1500-6000	12 - 14	14 - 16	12 - 14	12 - 14	12 - 14
	OVER 6000	14 - 16	16 - 18	14 - 16	14 - 16	14 - 16
45 TO 50	UNDER 750	10 - 12	12 - 14	8 - 10	8 - 10	10 - 12
	750-1500	14 - 16	16 - 20	10 - 12	12 - 14	14 - 16
	1500-6000	16 - 18	20 - 26	12 - 14	14 - 16	16 - 18
	OVER 6000	20 - 22	24 - 28	14 - 16	18 - 20	20 - 22
55	UNDER 750	12 - 14	14 - 18	8 - 10	10 - 12	10 - 12
	750-1500	16 - 18	20 - 24	10 - 12	14 - 16	16 - 18
	1500-6000	20 - 22	24 - 30	14 - 16	16 - 18	20 - 22
	OVER 6000	22 - 24	* 26 - 32	16 - 18	20 - 22	22 - 24
60	UNDER 750	16 - 18	20 - 24	10 - 12	12 - 14	14 - 16
	750-1500	20 - 24	* 26 - 32	12 - 14	16 - 18	20 - 22
	1500-6000	26 - 30	*32 - 40	14 - 18	18 - 22	24 - 26
	OVER 6000	*30 - 32	*36 - 44	20 - 22	24 - 26	26 - 28
65 TO 70	UNDER 750	18 - 20	20 - 26	10 - 12	14 - 16	14 - 16
	750-1500	24 - 26	*28 - 36	12 - 16	18 - 20	20 - 22
	1500-6000	*28 - 32	*34 - 42	16 - 20	22 - 24	26 - 28
	OVER 6000	*30 - 34	*38 - 46	22 - 24	26 - 30	28 - 30

*WHERE A SITES SPECIFIC INVESTIGATION INDICATES A HIGH PROBABILITY OF CONTINUING ACCIDENTS OR SUCH OCCURRENCES ARE INDICATED BY ACCIDENT HISTORY, THE DESIGNER MAY PROVIDE CLEAR ZONE DISTANCES GREATER THAN SHOWN IN TABLE 1. CLEAR ZONES MAY BE LIMITED TO 30 FEET FOR PRACTICALITY AND TO PROVIDE A CONSISTENT ROADWAY TEMPLATE IF PREVIOUS EXPERIENCE WITH SIMILAR PROJECTS OR DESIGNS INDICATES SATISFACTORY PERFORMANCE.

⊗ BACKSLOPE MAY ALSO BE REFERRED TO AS A CUT SLOPE AND FORESLOPE AS A FILL SLOPE.

TABLE 3
L_R = RUNOUT LENGTH

DESIGN SPEED (MPH)	DESIGN TRAFFIC VOLUME (ADT)			
	OVER 10000 VPD	5000-10000 VPD	1000-5000 VPD	UNDER 1000 VPD
	RUNOUT LENGTH L_R (FT.)	RUNOUT LENGTH L_R (FT.)	RUNOUT LENGTH L_R (FT.)	RUNOUT LENGTH L_R (FT.)
70	360	330	290	250
60	300	250	210	200
50	230	190	160	150
40	160	130	110	100
30	110	90	80	70

TABLE 4
SHYLINE OFFSET & FLARE RATES

DESIGN SPEED (MPH)	L_S SHYLINE OFFSET (FT.)	⊞ MAXIMUM FLARE RATE (a:b) FOR BARRIER INSIDE SHYLINE	MAXIMUM FLARE RATE (a:b) FOR BARRIER BEYOND SHYLINE	
			⊠ RIGID BARRIERS	□ SEMI- RIGID BARRIERS
70	9	30:1	20:1	15:1
60	8	26:1	18:1	14:1
55	7	24:1	16:1	12:1
50	6.5	21:1	14:1	11:1
45	6	18:1	12:1	10:1
40	5	16:1	10:1	8:1
30	4	13:1	8:1	7:1

⊠ SUCH AS CONCRETE BARRIER UNITS
□ SUCH AS W BEAM OR THRIE BEAM GUARD RAIL SYSTEMS

TABLE 2
⊕ HORIZONTAL CURVE ADJUSTMENTS
$CZ_C = (L_C)(K_{CZ})$

WHERE:
CZ_C = CLEAR ZONE ON OUTSIDE OF CURVATURE, FEET
L_C = CLEAR ZONE ON TANGENT SECTION, FEET (TABLE 1)
K_{CZ}

K_{CZ} = CURVE CORRECTION FACTOR

RADIUS (FT)	DESIGN SPEED (MPH)					
	40	45	50	55	65	70
2950	1.1	1.1	1.1	1.2	1.2	1.2
2300	1.1	1.1	1.2	1.2	1.2	1.3
1910	1.1	1.2	1.2	1.2	1.3	1.4
1640	1.1	1.2	1.2	1.3	1.3	1.4
1475	1.2	1.2	1.3	1.3	1.4	1.5
1315	1.2	1.2	1.3	1.3	1.4	
1150	1.2	1.2	1.3	1.4	1.5	
985	1.2	1.3	1.4	1.5	1.5	
820	1.3	1.3	1.4	1.5		
660	1.3	1.4	1.5			
495	1.4	1.5				
330	1.5					

THESE STANDARD PLANS HAVE BEEN PROPERLY EXAMINED BY ME, THE UNDERSIGNED PROFESSIONAL ENGINEER, I HAVE DETERMINED THAT THESE PLANS COMPLY WITH ALL APPLICABLE CODES AND HAVE BEEN PROPERLY ADAPTED TO USE ON THIS PROJECT.

STATE OF LOUISIANA
GERALD G. MENARD
License No. 20457
PROFESSIONAL ENGINEER
IN
CIVIL ENGINEERING
9/14/2020

STATE OF LOUISIANA
PAUL B. FOSSIER, JR
License No. 21028
PROFESSIONAL ENGINEER
IN
CIVIL ENGINEERING
5-21-17

SHEET NUMBER 651

PARISH	FEDERAL PROJECT	STATE PROJECT

DESIGNED P. FOSSIER	DETAILED C. OWENS	DATE MARCH 2015
CHECKED K. BRAUNER	CHECKED P. FOSSIER	SHEET 2 OF 10

BY	REVISION DESCRIPTION	DATE
P.F.	REVISED TABLES 1,2,3,4, SHY LINE NOTE	6-13-2017
3-2-15		

APPROVED BY CHIEF ENGINEER: Jamie P. Williams

STATE OF LOUISIANA DEPARTMENT OF TRANSPORTATION AND DEVELOPMENT

HIGHWAY GUARD RAILS
GUARD RAIL TABLES AND LAYOUTS

GR-200

BRIDGE AND STRUCTURAL DESIGN

5/30/2017 14:04

IP_PWP:d0684422\BD.1.1.1.0.02_gr_200.dgn

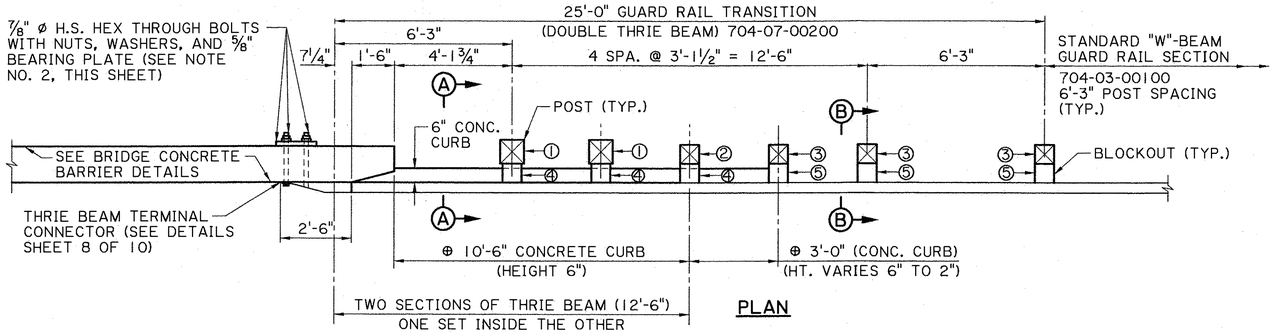

PLAN

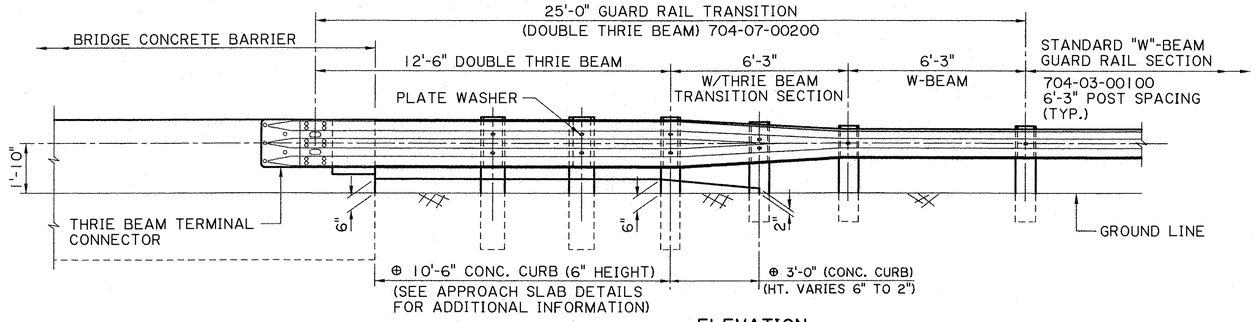

ELEVATION

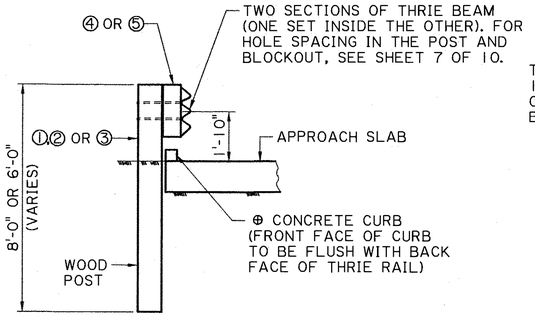

SECTION A-A

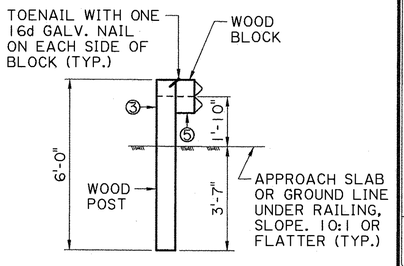

SECTION B-B

WOOD POST & WOOD BLOCKOUT

(POST & BLOCKOUT SIZE VARY IN TRANSITION, SEE PLAN VIEW)

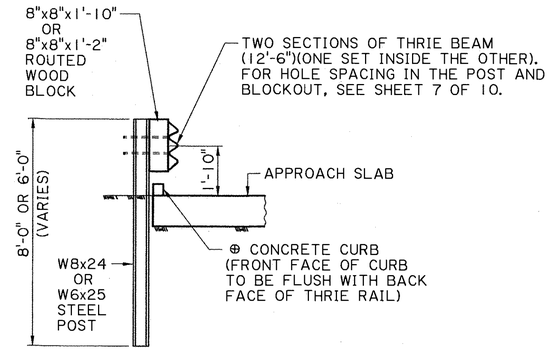

SECTION A-A

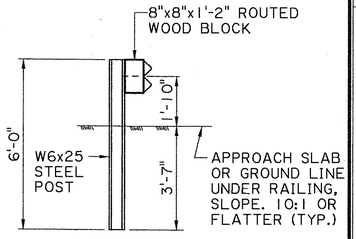

SECTION B-B

STEEL POST & ROUTED WOOD BLOCKOUT ALTERNATE

(POST & BLOCKOUT SIZE VARY IN TRANSITION, SEE PLAN VIEW)

NOTES

1. THIS GUARD RAIL TRANSITION IS APPROPRIATE FOR CONNECTION TO THE CONCRETE BARRIER SHAPE AS SHOWN. SEE BRIDGE BARRIER SPECIAL DETAILS FOR INFORMATION.
2. 7/8" ø H.S. BOLTS FOR CONCRETE BARRIER AND THRIE BEAM TERMINAL CONNECTOR SHALL BE ASTM A449. FOR 5/8" STEEL BEARING PLATE, SEE SHEET 9 OF 10. GALVANIZING SHALL BE IN ACCORDANCE WITH ASTM A153.
*3. STEEL POST ALTERNATES: STEEL POSTS ARE ALLOWED AS AN ALTERNATE TO WOOD POSTS. USE W8 x 24 STEEL POST ALTERNATE FOR 10" x 10" WOOD POST. USE W6 x 25 STEEL POST ALTERNATE FOR 8" x 8" WOOD POST. USE SAME LENGTHS AS WOOD POSTS.
4. BLOCKOUTS: USE WOOD BLOCKOUTS ONLY, STEEL AND RECYCLED BLOCKOUTS ARE NOT PERMITTED FOR THE GUARDRAILTRANSITION. ALL WOOD BLOCKOUTS ARE REQUIRED TO BE ROUTED WHEN WHEN USED WITH STEEL POSTS.
5. INTERMIXING OF STEEL AND WOOD POST IN THE TRANSITION SECTION IS NOT ALLOWED.
⊕6. FOR GUARD RAIL TRANSITION CONSTRUCTED WITH NEW APPROACH SLAB, CONCRETE CURB TO BE USED AND TO BE PAID FOR UNDER APPROACH SLAB PAY ITEM. FOR GUARD RAIL TRANSITION CONSTRUCTED WHEN APPROACH SLAB OR PAVEMENT IS EXISTING AND A NEW CURB IS NEEDED, THE NEW ASPHALT CURB ALTERNATE SHALL BE PAID UNDER AN ASPHALTIC CONCRETE PAY ITEM AS INDICATED IN THE PLANS.

*WOOD POST & WOOD BLOCKOUT FOR GUARDRAIL TRANSITION	
NO.	SIZE (WIDTHxDEPTHxLENGTH)
①	10" x 10" x 8'-0" POST
②	8" x 8" x 8'-0" POST
③	8" x 8" x 6'-0" POST
④	8" x 8" x 1'-10" BLOCKOUT
⑤	8" x 8" x 1'-2" BLOCKOUT

*SEE NOTE FOR STEEL POST ALTERNATE

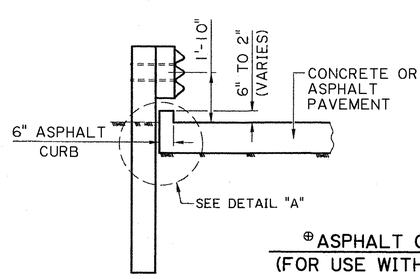

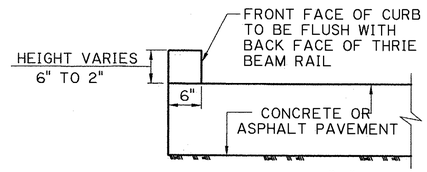

DETAIL "A"
N.T.S.

⊕ASPHALT CURB ALTERNATE - SECTION A-A
(FOR USE WITH CONCRETE OR ASPHALT PAVEMENT)

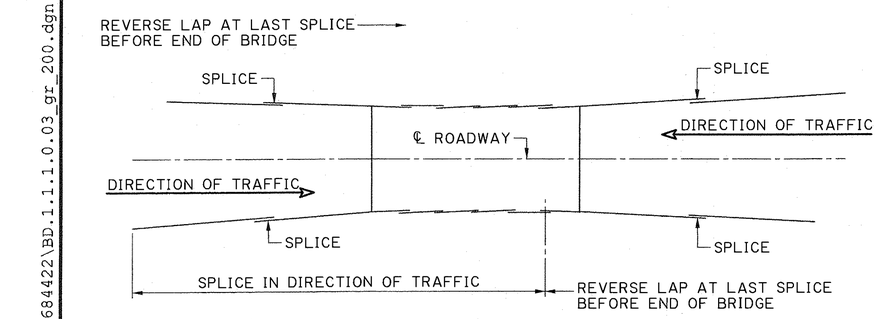

LAYOUT SHOWING DIRECTION OF GUARD RAIL SPLICE FOR TWO WAY TRAFFIC
N.T.S.

THESE STANDARD PLANS HAVE BEEN PROPERLY EXAMINED BY ME, THE UNDERSIGNED PROFESSIONAL ENGINEER. I HAVE DETERMINED THAT THESE PLANS COMPLY WITH ALL APPLICABLE CODES AND HAVE BEEN PROPERLY ADAPTED TO USE ON THIS PROJECT.

STATE OF LOUISIANA
GERALD G. MENARD
License No. 20437
PROFESSIONAL ENGINEER
IN
CIVIL ENGINEERING
9/10/2020

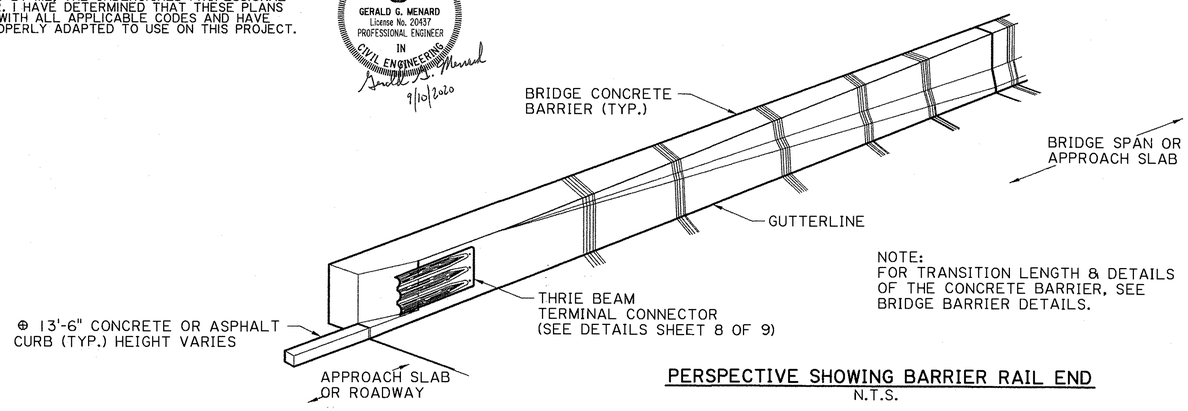

PERSPECTIVE SHOWING BARRIER RAIL END
N.T.S.

NOTE:
FOR TRANSITION LENGTH & DETAILS OF THE CONCRETE BARRIER, SEE BRIDGE BARRIER DETAILS.

STATE OF LOUISIANA
PAUL B. FOSSIER, JR
License No. 21029
PROFESSIONAL ENGINEER
IN
CIVIL ENGINEERING
5-31-17

SHEET NUMBER 652

PARISH	FEDERAL PROJECT	STATE PROJECT

DESIGNED	CHECKED	K.M.B.
DETAILED	CHECKED	P.F.
DATE	SHEET	BY
P. FOSSIER	C. OWENS	DATE: 6-13-2017
K. BRAUNER	P. FOSSIER	
MARCH 2015	3 OF 10	

DATE	REVISION DESCRIPTION	APPROVED BY CHIEF ENGINEER:
2-14-17	UPDATED FOR 2016 SPECIFICATIONS	Jamie P. Williams
3-2-15	REVISED GUARDRAIL HEIGHT AND CURB DETAIL	

HIGHWAY GUARD RAILS

THRIE BEAM GUARD RAIL TRANSITION TO BRIDGE RAIL

GR-200

BRIDGE AND STRUCTURAL DESIGN

5/30/2017 14:05

IP_PWP:d0684422\BD.1.1.1.0.03_gr_200.dgn

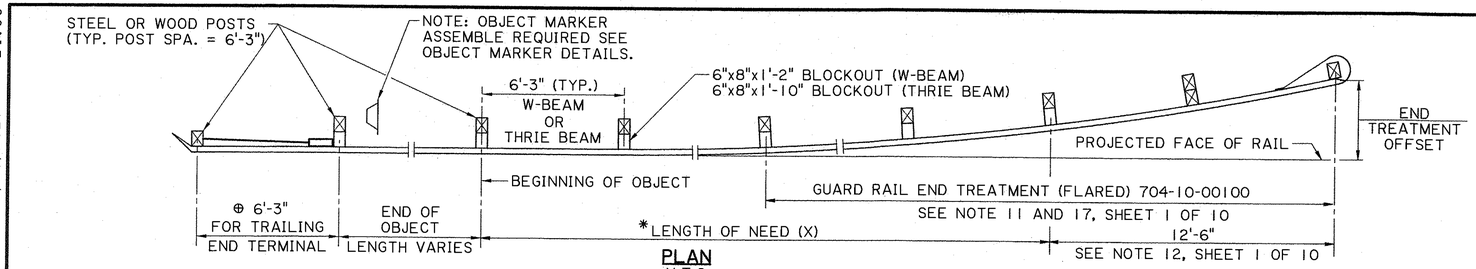

PLAN
N.T.S.

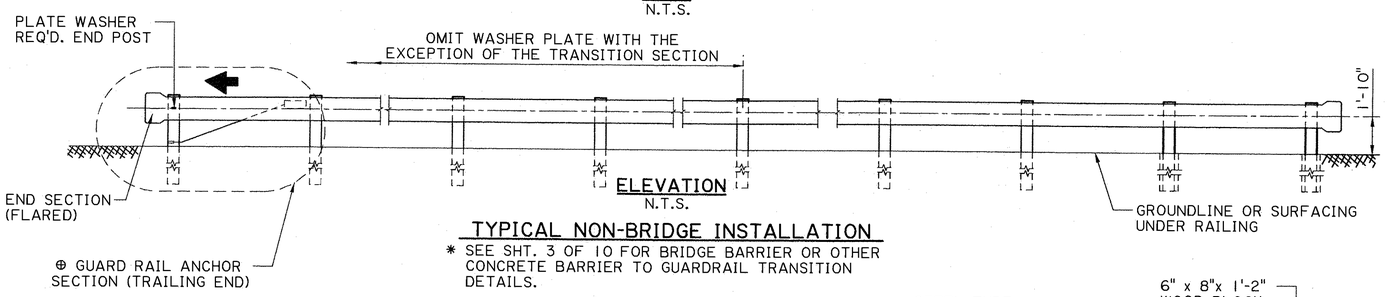

ELEVATION
N.T.S.

TYPICAL NON-BRIDGE INSTALLATION

* SEE SHT. 3 OF 10 FOR BRIDGE BARRIER OR OTHER CONCRETE BARRIER TO GUARDRAIL TRANSITION DETAILS.

⊕ USE GUARDRAIL END TREATMENT IF WITHIN CLEAR ZONE OR AS SHOWN ON GUARDRAIL LAYOUT.

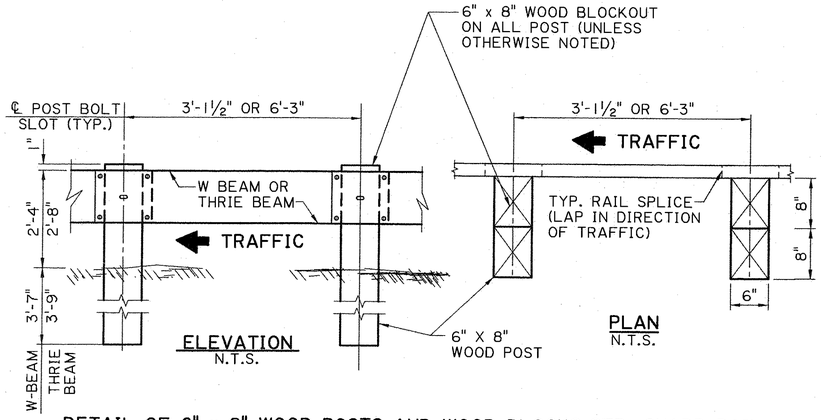

ELEVATION
N.T.S.

PLAN
N.T.S.

DETAIL OF 6" x 8" WOOD POSTS AND WOOD BLOCKS-STD. GUARD RAIL

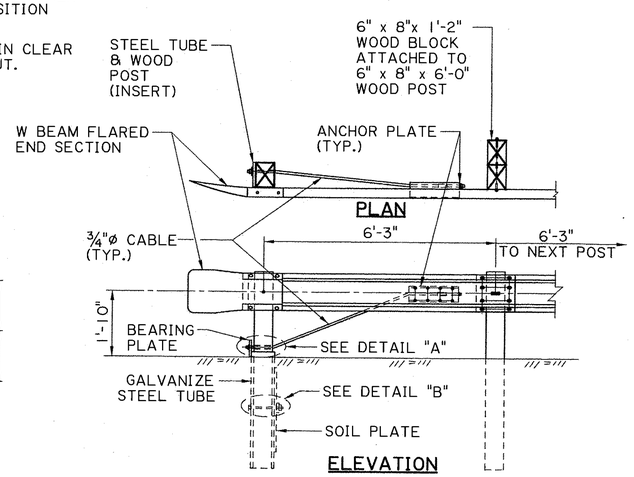

PLAN

ELEVATION

TYPICAL W BEAM TRAILING END
N.T.S.

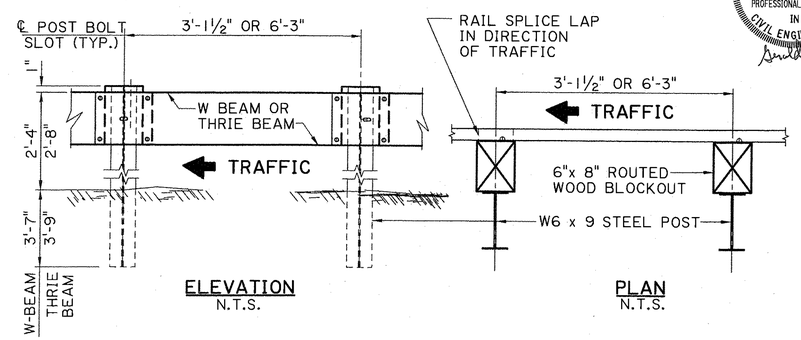

ELEVATION
N.T.S.

PLAN
N.T.S.

DETAIL OF W6 x 9 STEEL POSTS AND WOOD BLOCKS-STD. GUARD RAIL

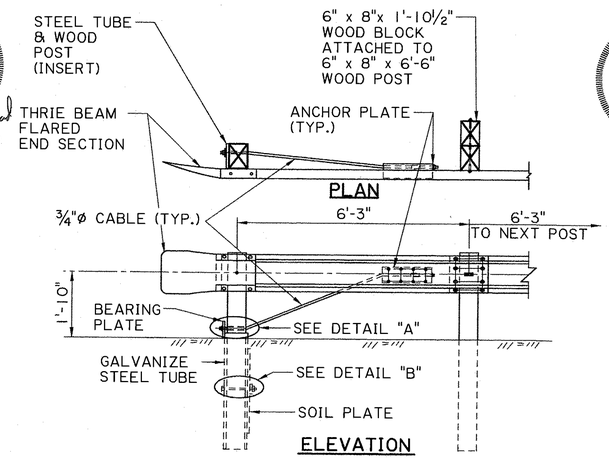

PLAN

ELEVATION

TYPICAL THRIE BEAM TRAILING END
N.T.S.

NOTES:

1. INTERMIXING OF STEEL AND WOOD POSTS IN ANY ONE SECTION OF THE GUARD RAIL SHALL NOT BE PERMITTED.
2. GUARD RAIL SHALL NOT BE PLACED CLOSER TO THE TRAVELED WAY THAN THE OUTSIDE EDGE OF THE SHOULDER. THE OFFSET TO THE FACE OF THE NOSE OF THE END TREATMENT SHALL BE AS PER THE MANUFACTURER'S RECOMMDATIONS, FROM THE PROJECTED FACE OF THE RAIL.
3. ALL MATERIAL DIMENSIONS ARE SUBJECT TO MANUFACTURING TOLERANCES.
4. WOOD POST AND BLOCKS: TREATMENT SHALL BE IN ACCORDANCE WITH DOTD STANDARD SPECTIFICATIONS SECTION 1014. POST AND BLOCKS SHALL EITHER BE ROUGH SAWED (UNPLANED) OR S4S WITH NOMINAL DIMENSION INDICATED.THE SIZE TOLERANCE OF ROUGH SAWED TIMBER IN THE DIRECTION OF THE BOLT HOLES SHALL NOT BE MORE THAN +¼".
5. STEEL POST AND WOOD BLOCKS (THRIE BEAM ONLY): BLOCK MOUNTS TO POST WITH 2-BOLTS, RAIL MOUNTS TO BLOCK WITH BOLT ON APPROACHING TRAFFIC SIDE OF BLOCK AND POST WEB.
6. FOR DETAILS OF SOIL PLATE, ANCHOR PLATE, AND ¾" CABLE, SEE SHT. 9 OF 10. FOR BREAKAWAY TIMBER POST AND GALV. STEEL TUBE, SEE SHT. 7 OF 10.

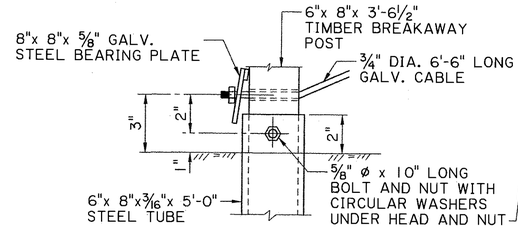

DETAIL "A"
N.T.S.

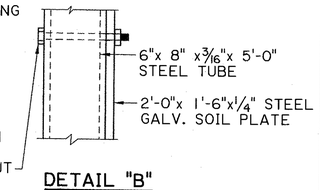

DETAIL "B"
N.T.S.

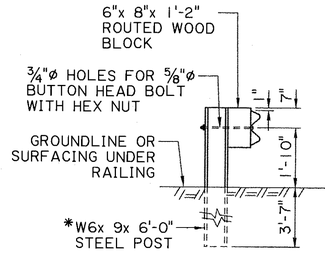

TYPICAL SECTION AT STEEL POST & WOOD BLOCK (W-BEAM)

*W6x8.5 MAY BE USED AS AN ALTERNATE

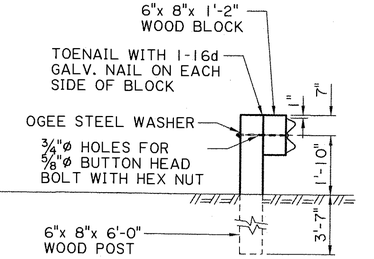

TYPICAL SECTION AT WOOD POST & WOOD BLOCK (W-BEAM)
N.T.S.

THESE STANDARD PLANS HAVE BEEN PROPERLY EXAMINED BY ME, THE UNDERSIGNED PROFESSIONAL ENGINEER. I HAVE DETERMINED THAT THESE PLANS COMPLY WITH ALL APPLICABLE CODES AND HAVE BEEN PROPERLY ADAPTED TO USE ON THIS PROJECT.

STATE OF LOUISIANA
PAUL B. FOSSIER, JR
License No. 21028
PROFESSIONAL ENGINEER
IN
CIVIL ENGINEERING
5-31-17

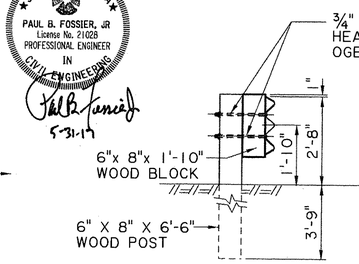

TYPICAL SECTION AT WOOD POST & WOOD BLOCK (THRIE BEAM)
N.T.S.

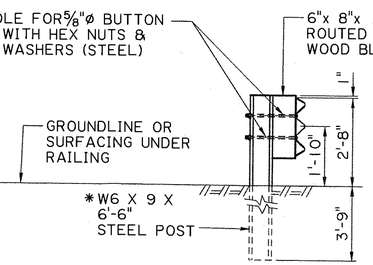

TYPICAL SECTION AT STEEL POST & WOOD BLOCK (THRIE BEAM)

W6x 8.5 MAY BE USED AS ALTERNATE FOR STEEL POST ATTACHED TO CONCRETE, SEE SHT. 10 OF 10.
N.T.S.

STANDARD W-BEAM & THRIE BEAM GUARD RAIL SECTIONS

(FOR BRIDGE CONCRETE BARRIER TO GUARD RAIL TRANSITION DETAILS, SEE SHT. 3 OF 10)

SHEET NUMBER	653

PARISH	FEDERAL PROJECT	STATE PROJECT

DESIGNED	P. FOSSIER	DETAILED	C. OWENS	DATE	MARCH 2015
CHECKED	K. BRAUNER	CHECKED	P. FOSSIER	SHEET	4 OF 10

K.M.B.	P. F.	
		BY
2-14-17	UPDATED FOR 2016 SPECIFICATIONS	
3-2-15	REVISED W-BEAM AND THRIE BEAM GUARDRAIL HEIGHT	
DATE	REVISION DESCRIPTION	

APPROVED BY CHIEF ENGINEER: *Frances P. Williams*
DATE: 6-13-2017

STATE OF LOUISIANA DEPARTMENT OF TRANSPORTATION AND DEVELOPMENT

BRIDGE AND STRUCTURAL DESIGN

HIGHWAY GUARD RAILS
GUARD RAIL LAYOUT AND SECTIONS

GR-200

5/30/2017 14:06

IP_PWP:d0684422\BD.1.1.1.0.04_gr_200.dgn

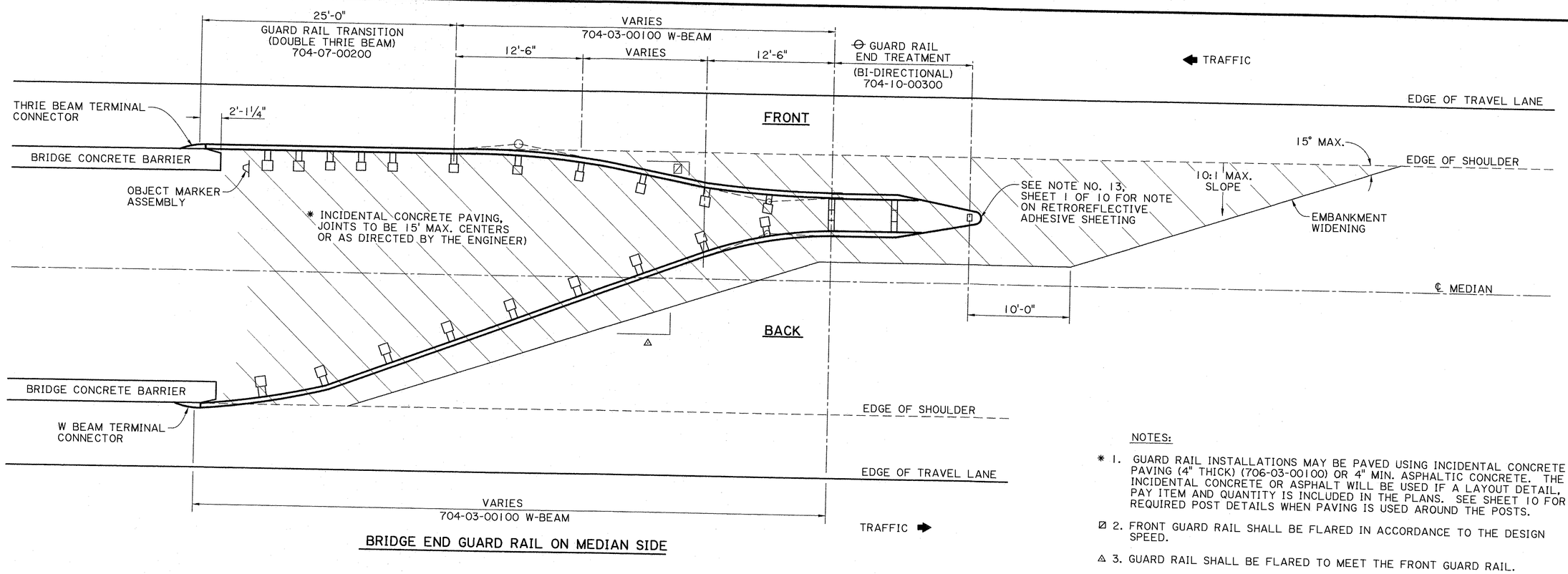

BRIDGE END GUARD RAIL ON MEDIAN SIDE

NOTES:

* 1. GUARD RAIL INSTALLATIONS MAY BE PAVED USING INCIDENTAL CONCRETE PAVING (4" THICK) (706-03-00100) OR 4" MIN. ASPHALTIC CONCRETE. THE INCIDENTAL CONCRETE OR ASPHALT WILL BE USED IF A LAYOUT DETAIL, PAY ITEM AND QUANTITY IS INCLUDED IN THE PLANS. SEE SHEET 10 FOR REQUIRED POST DETAILS WHEN PAVING IS USED AROUND THE POSTS.

⊠ 2. FRONT GUARD RAIL SHALL BE FLARED IN ACCORDANCE TO THE DESIGN SPEED.

△ 3. GUARD RAIL SHALL BE FLARED TO MEET THE FRONT GUARD RAIL.

⊖ 4. USE A GUARD RAIL END TREATMENT (BI-DIRECTIONAL), ITEM 704-10-00300.

5. THE BACKSIDE GUARD RAIL AND END TREATMENT MAY BE ELIMINATED AND A GUARD RAIL END TREATMENT (FLARED OR TANGENT) MAY BE UTILIZED INSTEAD ON THE ONCOMING END OF BRIDGE IF THE BACK OF THE GUARD RAIL END TREATMENT IS OUT OF THE CLEAR ZONE (Lc) FOR THE OPPOSING TRAFFIC.

6. BOLT HOLE LOCATIONS ON THE CONCRETE BARRIER STANDARD ARE FOR THE THRIE BEAM TERMINAL CONNECTOR. WHEN W BEAM TERMINAL CONNECTORS ARE USED THE LOCATION OF THESE HOLES SHALL BE ADJUSTED TO FIT THE BOLT HOLE PATTERN FOR THE W BEAM TERMINAL CONNECTOR AS SHOWN ON SHEET 8 OF 10.

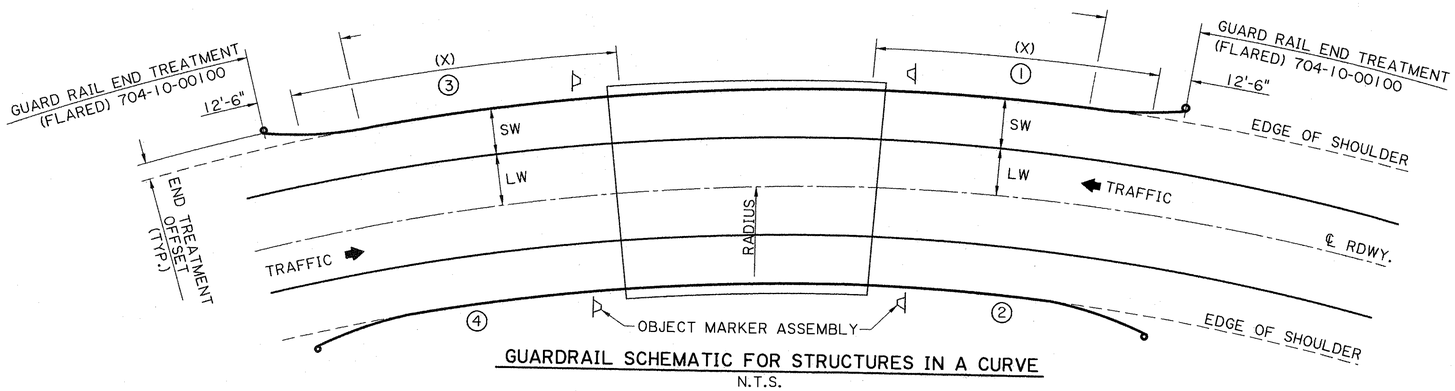

GUARDRAIL SCHEMATIC FOR STRUCTURES IN A CURVE
N.T.S.

FORMULA FOR COMPUTING GUARD RAILS IN A CURVE

① ② $A = \cos^{-1}\left[\frac{R+LW}{R+LW+CZ_c}\right] - \cos^{-1}\left[\frac{R+LW}{R+LW+SW}\right]$ $\quad X = \frac{A\,(R+LW+SW)}{57.3}$

③ ④ $A = \cos^{-1}\left[\frac{R}{R+CZ_c}\right] - \cos^{-1}\left[\frac{R}{R+LW+SW}\right]$ $\quad X = \frac{A\,(R+LW+SW)}{57.3}$

NOTES:

1. GUARD RAILS COMPUTED IN ACCORDANCE WITH THE ABOVE EQUATIONS SHALL BE INSTALLED PARALLEL WITH THE CURVE OF THE ROADWAY. END TREATMENT SYSTEMS SHALL USE APPLICABLE OFFSETS WHEN REQUIRED.
2. LENGTH OF NEED (X) ON ONE WAY TRAFFIC SHALL USE THE EQUATION SHOWN FOR LOCATION ① & ②. WHEN A BRIDGE IS LOCATED IN A RADIUS> 2860 ft.; THE LENGTH OF NEED (X) SHALL BE COMPUTED AS STRAIGHT GUARD RAIL (USE X,Y,Z EQUATIONS ON SHEET 2 OF 10) WITH A FLARE RATE AS PER TABLE 4, SHEET 2 OF 10.

CZc : ADJUSTED CLEAR ZONE FOR HORIZONTAL CURVE, FT. SEE SHEET 2 OF 10.
R : RADIUS OF CURVE @ ℄ ROADWAY, FT
LW : LANE WIDTH, FT.
SW : SHOULDER WIDTH, FT.
X : LENGTH OF NEED, FT.
A : ANGLE AT CENTER FOR LENGTH OF NEED, DEGREE

THESE STANDARD PLANS HAVE BEEN PROPERLY EXAMINED BY ME, THE UNDERSIGNED PROFESSIONAL ENGINEER. I HAVE DETERMINED THAT THESE PLANS COMPLY WITH ALL APPLICABLE CODES AND HAVE BEEN PROPERLY ADAPTED TO USE ON THIS PROJECT.

STATE OF LOUISIANA
GERALD G. MENARD
License No. 20437
PROFESSIONAL ENGINEER
IN
CIVIL ENGINEERING
7/10/2020

STATE OF LOUISIANA
PAUL B. FOSSIER, JR
License No. 21028
PROFESSIONAL ENGINEER
IN
CIVIL ENGINEERING
5-31-17

SHEET NUMBER 654

PARISH	FEDERAL PROJECT	STATE PROJECT

DESIGNED	P. FOSSIER
CHECKED	K. BRAUNER
DETAILED	C. OWENS
CHECKED	P. FOSSIER
DATE	MARCH 2015
SHEET	5 OF 10

BY	DATE	REVISION DESCRIPTION
K.M.B.	2-14-17	UPDATED FOR 2016 SPECIFICATIONS

APPROVED BY CHIEF ENGINEER: Vincent P. Williams
DATE: 6-13-2017

HIGHWAY GUARD RAILS

GR-200

BRIDGE AND STRUCTURAL DESIGN

5/30/2017 14:07

IP_PWP:d0684422\BD.1.1.1.0.05_gr_200.dgn

5/30/2017 14:08

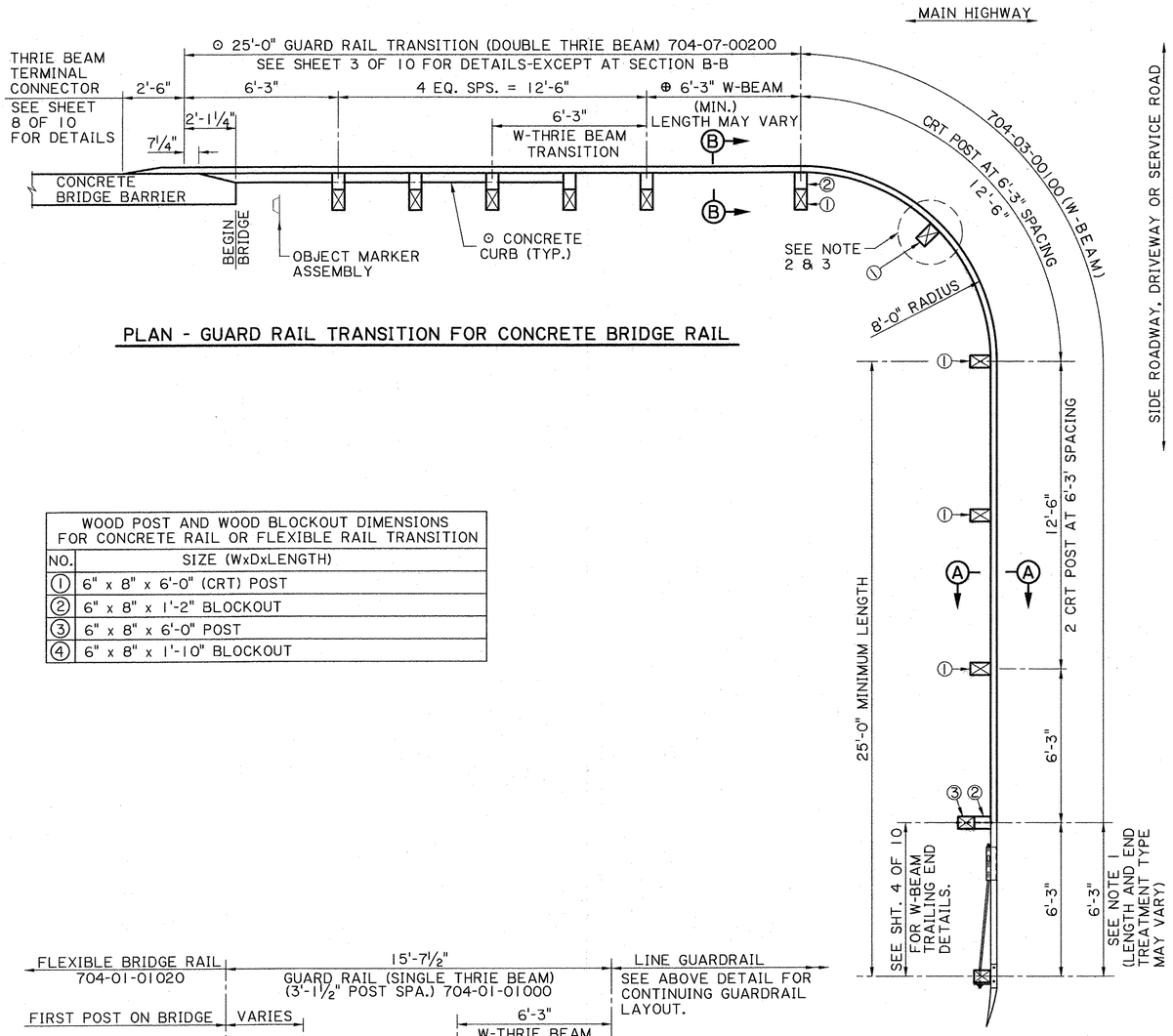

PLAN - GUARD RAIL TRANSITION FOR CONCRETE BRIDGE RAIL

WOOD POST AND WOOD BLOCKOUT DIMENSIONS FOR CONCRETE RAIL OR FLEXIBLE RAIL TRANSITION	
NO.	SIZE (WxDxLENGTH)
①	6" x 8" x 6'-0" (CRT) POST
②	6" x 8" x 1'-2" BLOCKOUT
③	6" x 8" x 6'-0" POST
④	6" x 8" x 1'-10" BLOCKOUT

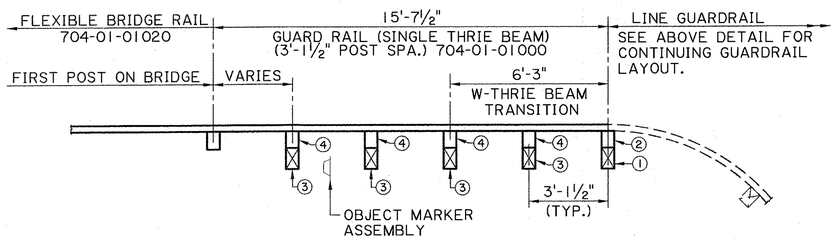

PLAN - GUARD RAIL TRANSITIONS FOR FLEXIBLE BRIDGE RAILS

NOTES:

1. THE USE OF THE W-BEAM TRAILING END SHALL BE LIMITED TO THE APPROACH ROADWAY SUCH AS RESIDENTIAL OR BUSINESS DRIVEWAYS OR OTHER SERVICE ROADWAYS. IF THE APPROACH ROADWAY CARRIES NORMAL HIGHWAY TRAFFIC, A CRASHWORTHY END TREATMENT, PAY ITEM 704-10-00100, 704-10-00200, OR 704-10-00300, SHALL BE USED IN LIEU OF THE W-BEAM TRAILING END.
2. THE CURVED GUARD RAIL SECTION SHALL BE SHOP BENT.
3. THE RAIL IS NOT BOLTED TO THE CRT POST AT THE CENTER OF THE NOSE AS SHOWN.
4. NO WASHERS ARE USED ON THE 5/8" ø BUTTON HEAD BOLTS CONNECTING THE RAIL TO THE CABLE RELEASE TERMINAL (CRT) POSTS.
5. BOLTS SHALL CONFORM TO THE REQUIREMENTS OF ASTM A 307 AND NUTS TO THE REQUIREMENTS OF ASTM A 563, GRADE A OR BETTER, AND BE GALVANIZED IN ACCORDANCE WITH ASTM A 153.
6. ALL ANGLES, CHANNELS AND PLATES SHALL CONFORM TO THE REQUIREMENTS OF ASTM A 36 AND STRUCTURAL TUBING TO ASTM A 500. WELDING SHALL MEET THE CURRENT REQUIREMENTS OF THE ANSI/AASHTO/AWS, BRIDGE WELDING CODE. ALL STRUCTURAL STEEL SHALL BE GALVANIZED IN ACCORDANCE WITH ASTM A 123. NO PUNCHING, DRILLING, CUTTING OR WELDING WILL BE PERMITTED AFTER GALVANIZING.
7. THE WOOD BREAKAWAY POST SHALL BE S4S TIMBER WITH A STRESS GRADE OF 1200 PSI AND SHALL BE GRADE MARKED OR CERTIFIED BY A RECOGNIZED ASSOCIATION OR AGENCY WHICH IS CERTIFIED BY THE BOARD OF REVIEW, AMERICAN LUMBER STANDARDS COMMITTEE, TO GRADE THE SPECIES. SEE SHEET 7 OF 10 FOR DETAILS.
8. FOR BOLT DETAILS, SEE SHEET NO. 9 OF 10.
9. WOOD POST AND BLOCKS SHALL BE TREATED IN ACCORDANCE WITH SECTION 1014 OF DOTD STD. SPECIFICATIONS.

⊙ 10. 13'-6" LONG CURB REQUIRED, SEE SHEET 3 OF 10 FOR DETAILS.

11. THE SLOPE IN FRONT OF THE INSTALLATION SHOULD NOT EXCEED 10H:1V.
12. TOP OF GUARD RAIL TO BE INSTALL 27" ABOVE GROUND LINE.

⊕ 13. LENGTH OF W-BEAM SECTION MAY INCREASE TO MEET SITE CONSTRAINTS FROM 6'-3" (MIN.)

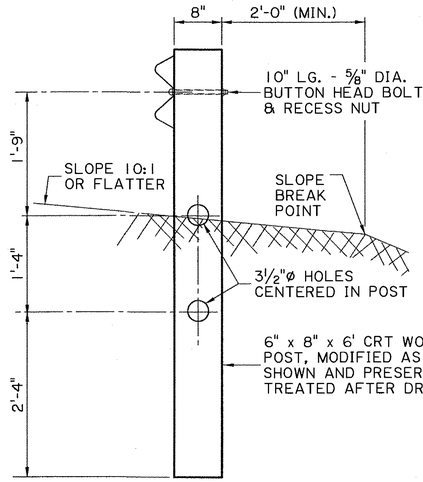

SECTION A - A
N.T.S.

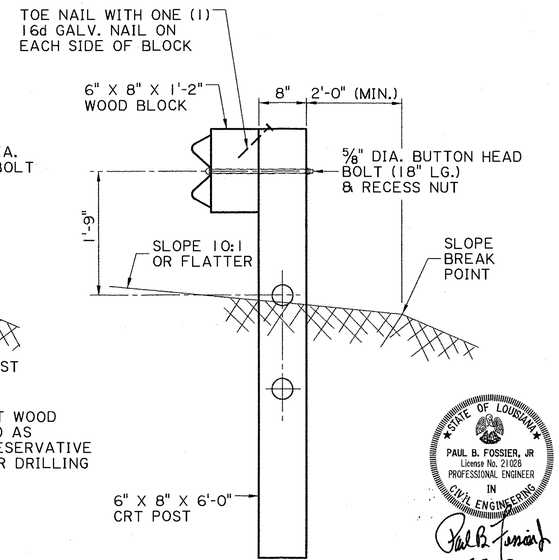

SECTION B-B
N.T.S.

THESE STANDARD PLANS HAVE BEEN PROPERLY EXAMINED BY ME, THE UNDERSIGNED PROFESSIONAL ENGINEER. I HAVE DETERMINED THAT THESE PLANS COMPLY WITH ALL APPLICABLE CODES AND HAVE BEEN PROPERLY ADAPTED TO USE ON THIS PROJECT.

STATE OF LOUISIANA
GERALD G. MENARD
License No. 20437
PROFESSIONAL ENGINEER
IN
CIVIL ENGINEERING
9/10/2020

STATE OF LOUISIANA
PAUL B. FOSSIER, JR
License No. 21026
PROFESSIONAL ENGINEER
IN
CIVIL ENGINEERING
5-3-17

SHEET NUMBER	655

PARISH	FEDERAL PROJECT	STATE PROJECT

DESIGNED P. FOSSIER	DETAILED C. OWENS	DATE MARCH 2015
CHECKED K. BRAUNER	CHECKED P. FOSSIER	SHEET 6 OF 10

DATE	REVISION DESCRIPTION	BY
2-14-17	UPDATED FOR 2016 SPECIFICATIONS	K.M.B.
3-2-15	REVISED DETAIL	P.F.

DATE: 6-13-2017
APPROVED BY CHIEF ENGINEER: Jamie P. Williams

HIGHWAY GUARD RAILS
BRIDGE ENDS (T-INTERSECTION)
GR-200

BRIDGE AND STRUCTURAL DESIGN

IP_PWP:d0684422\BD.1.1.1.0.06_gr_200.dgn

5/30/2017 14:12

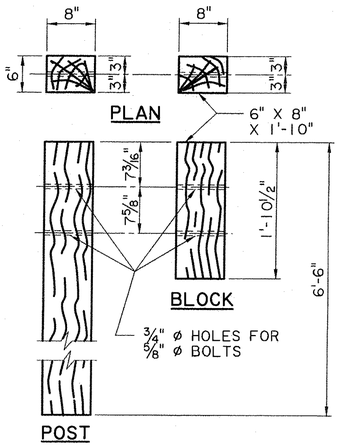

WOOD POST AND WOOD BLOCK FOR STANDARD THRIE BEAM GUARD RAIL

N.T.S.

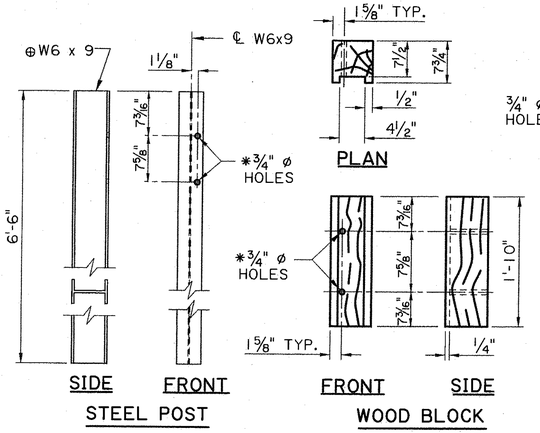

STEEL POST AND ROUTED WOOD BLOCK FOR STANDARD THRIE BEAM GUARD RAIL

N.T.S.

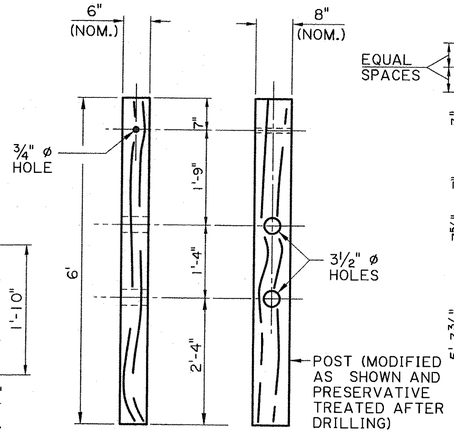

CONTROL RELEASING TERMINAL (CRT) WOOD POST

(USED AT T-INTERSECTION DETAILS, SEE SHT. 6 OF 10)

N.T.S.

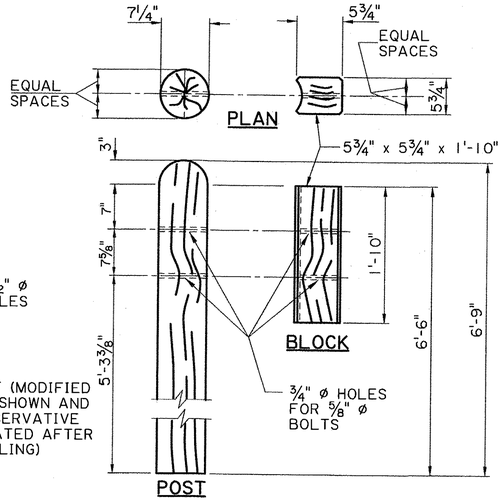

⊕ ROUND WOOD POST AND WOOD BLOCK FOR STANDARD THRIE BEAM GUARD RAIL

N.T.S.

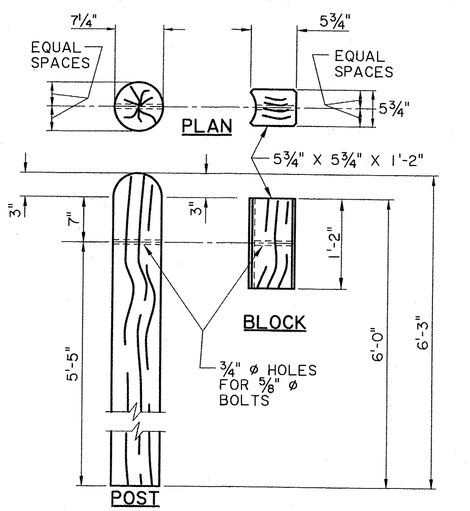

⊕ ROUND WOOD POST AND WOOD BLOCK FOR STANDARD W- BEAM GUARD RAIL

N.T.S.

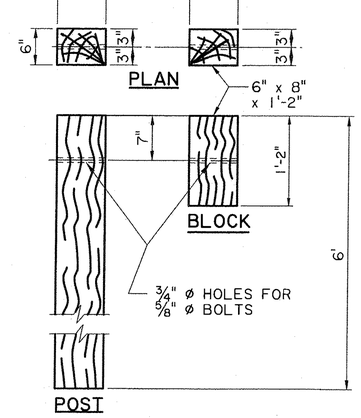

WOOD POST AND WOOD BLOCK FOR STANDARD W- BEAM GUARD RAIL

N.T.S.

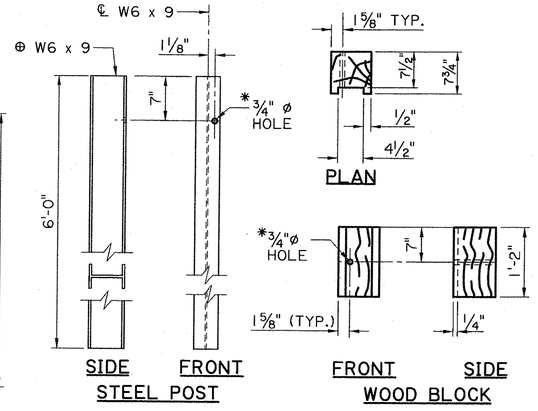

STEEL POST AND ROUTED WOOD BLOCK FOR STANDARD W- BEAM GUARD RAIL

N.T.S.

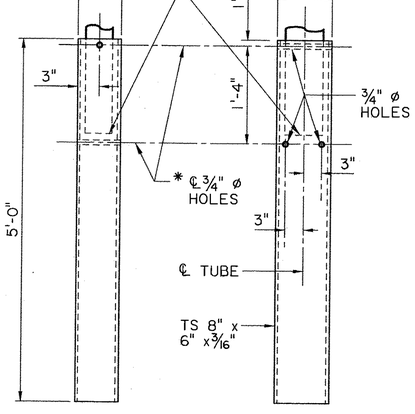

GALVANIZED STEEL TUBE

(FOR TRAILING END SECTION, SEE SHT. 4 OR 6 OF 10.)

N.T.S.

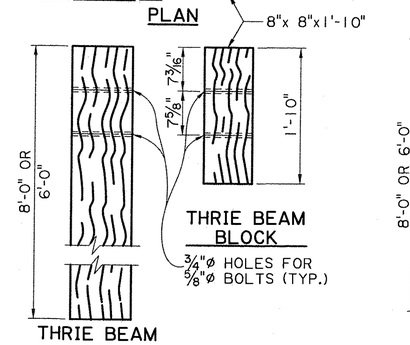

WOOD POST AND WOOD BLOCK FOR THRIE BEAM TRANSITION TO BRIDGE RAIL

(POST SIZE, BLOCK SIZE AND HOLE LOCATIONS VARIES WITH LOCATION IN TRANSITION, SEE SHT.3 OF 10)

N.T.S.

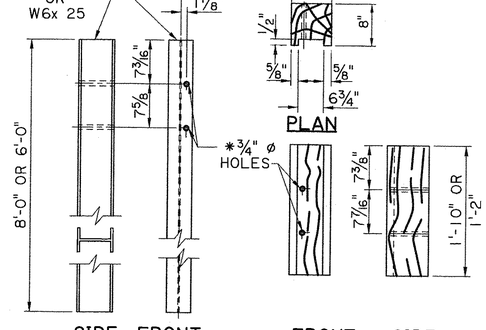

STEEL POST AND ROUTED WOOD BLOCK FOR THRIE BEAM TRANSITION TO BRIDGE RAIL

(POST SIZE, BLOCK SIZE AND HOLE LOCATIONS VARIES WITH LOCATION IN TRANSITION, SEE SHEET 3 OF 10)

N.T.S.

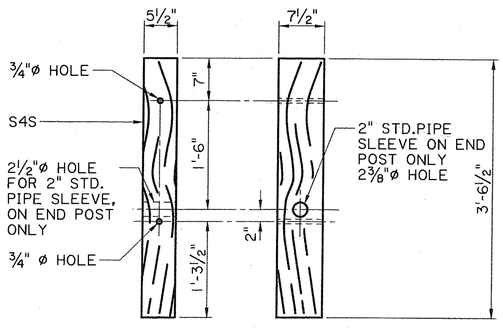

TIMBER BREAKAWAY POST

(FOR TRAILING END SECTION, SEE SHT. 4 & 6 OF 10.)

NOTES:

⊕ 1. THE ROUND WOOD POST AND WOOD BLOCK IS ALLOWED TO REPLACE THE 6" x 8" STANDARD LINE POST AND BLOCKOUT FOR W BEAM AND THRIE BEAM GUARD RAIL. THE ROUND WOOD POST SHALL NOT BE USED AS AN ALTERNATE FOR THE CRT POST, AND THE THRIE BEAM TRANSITION POST SECTION FOR THE CONCRETE BRIDGE RAIL.

2. A RECYCLED BLOCK ALTERNATE IS ALLOWED AS A SUBSTITITE FOR THE WOOD BLOCK ON A 1 FOR 1 BASIS AT NO ADDITIONAL PAYMENT. THE RECYCLED BLOCK MUST HAVE FHWA APPROVAL AND MEET NCHRP 350 OR MASH REQUIREMENTS.

⊕ 3. A W6x 8.5 STEEL POST MAY BE USED AS AN ALTERNATE FOR A W6 x 9 POST.

* 4. POST AND BLOCK HOLES SHALL BE DRILLED ADJACENT TO THE DIRECTION OF THE TRAFFIC.

THESE STANDARD PLANS HAVE BEEN PROPERLY EXAMINED BY ME, THE UNDERSIGNED PROFESSIONAL ENGINEER. I HAVE DETERMINED THAT THESE PLANS COMPLY WITH ALL APPLICABLE CODES AND HAVE BEEN PROPERLY ADAPTED TO USE ON THIS PROJECT.

STATE OF LOUISIANA
GERALD G. MENARD
License No. 20437
PROFESSIONAL ENGINEER
IN
CIVIL ENGINEERING
7/10/2020

STATE OF LOUISIANA
PAUL B. FOSSIER, JR
License No. 21026
PROFESSIONAL ENGINEER
IN
CIVIL ENGINEERING
5-31-17

SHEET NUMBER 656

PARISH	CONTROL SECTION	STATE PROJECT
DESIGNED P.FOSSIER	DETAILED J. KOEMPEL	SERIES NUMBER MARCH 2015
CHECKED K.BRAUNER	CHECKED P. FOSSIER	7 OF 10

NO.	DATE	REVISION DESCRIPTION	BY
1	3-2-15	REVISE NOTES	P.F.

APPROVED BY CHIEF ENGINEER: Nauce P. Villere

DATE: 6-13-2017

HIGHWAY GUARD RAILS
GUARD RAIL POST AND BLOCK

GR-200

BRIDGE AND STRUCTURAL DESIGN

IP_PWP:d0684422\BD.1.1.1.0.07_GR-200.dgn

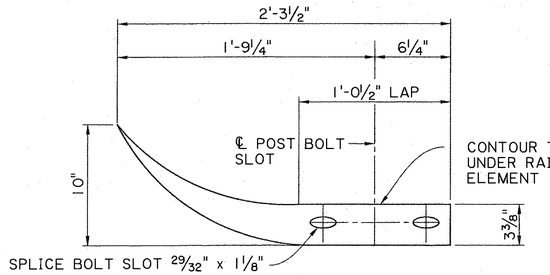

PLAN
N.T.S.

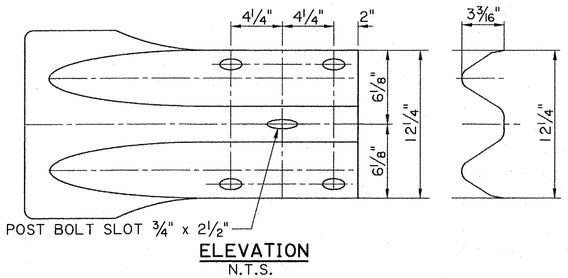

ELEVATION
N.T.S.

W BEAM END SECTION (FLARED)

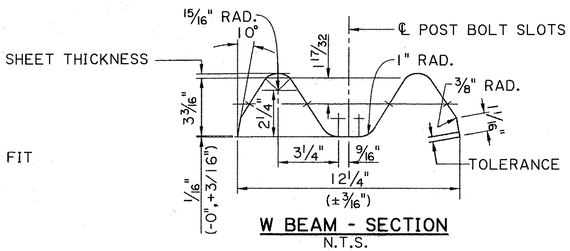

W BEAM - SECTION
N.T.S.

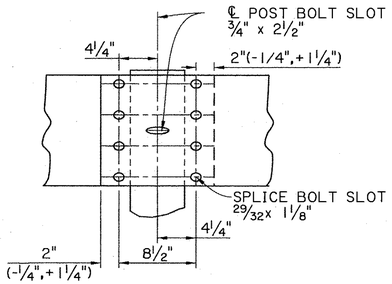

W-BEAM-SPLICE DETAIL-ELEVATION

⅝"ø x 1¼" BUTTON HEAD OVAL SHOULDER BOLTS WITH ⅝" ø RECESSED HEX NUTS-TOTAL 8 PER SPLICE AND 4 PER TERMINAL SECTION, LAP IN DIRECTION OF TRAFFIC.

W BEAM GUARD RAIL ELEMENT

N.T.S.

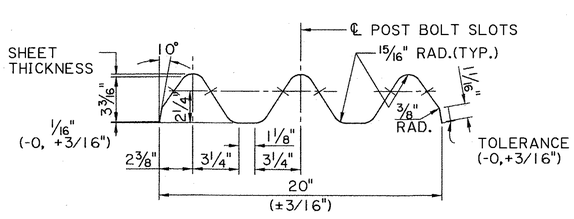

THRIE BEAM - SECTION
N.T.S.

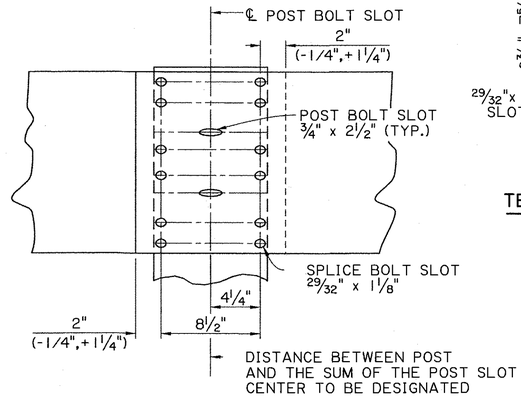

THRIE BEAM-SPLICE DETAIL-ELEVATION

⅝"ø x 1¼" BUTTON HEAD OVAL SHOULDER BOLTS WITH ⅝" ø RECESSED HEX NUTS-TOTAL 12 PER SPLICE AND 4 PER TERMINAL SECTION, LAP IN DIRECTION OF TRAFFIC.

THRIE BEAM GUARD RAIL ELEMENT

N.T.S.

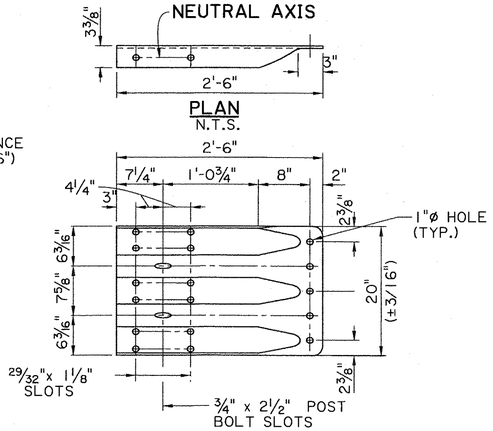

TERMINAL CONNECTOR (THRIE BEAM)

N.T.S.

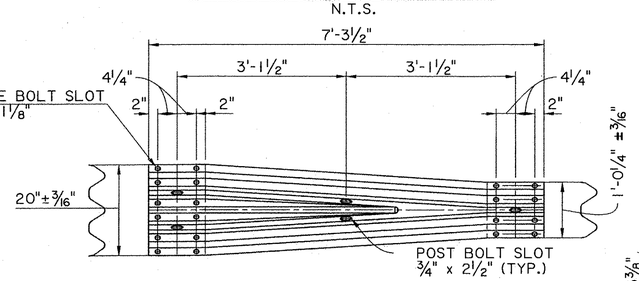

W/THRIE BEAM TRANSITION ELEVATION

N.T.S.

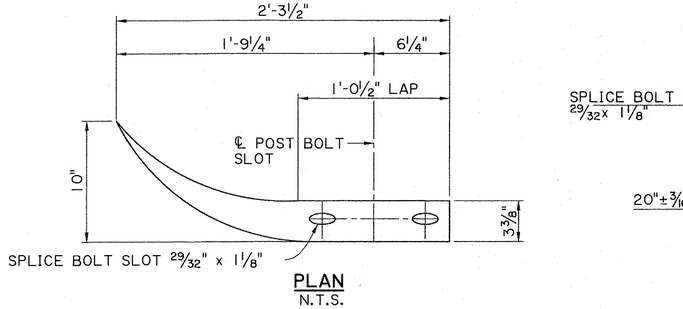

PLAN
N.T.S.

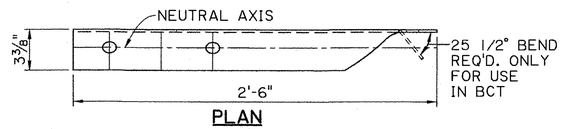

PLAN

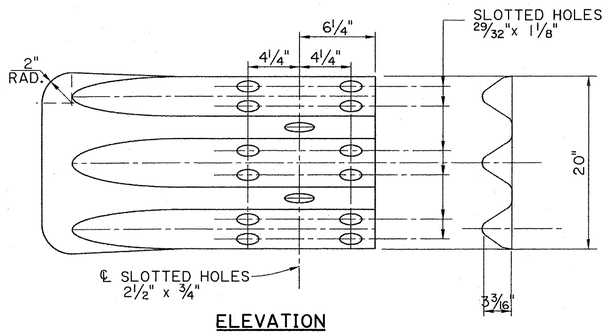

ELEVATION
N.T.S.

FLARED END SECTION FOR THRIE BEAM

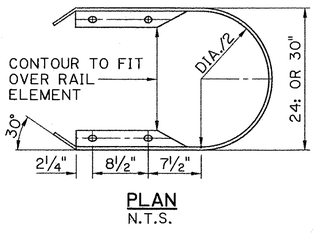

PLAN
N.T.S.

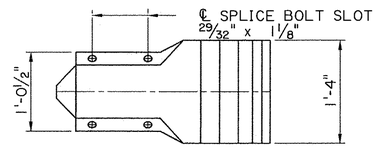

ELEVATION
N.T.S.

W-BEAM END SECTION BUFFER

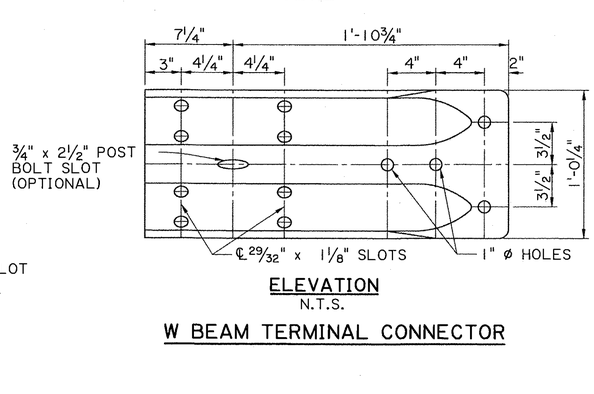

ELEVATION
N.T.S.

W BEAM TERMINAL CONNECTOR

NOTES:

1. ALL RAIL COMPONENTS EXCEPT THE W AND THRIE BEAM TERMINAL CONNECTORS SHALL MEET AASHTO M 180, CLASS "A" METAL THICKNESS WITH A TYPE II COATING. THE W BEAM AND THRIE BEAM TERMINAL CONNECTORS SHALL BE CLASS "B" METAL THICKNESS WITH TYPE II COATING.

THESE STANDARD PLANS HAVE BEEN PROPERLY EXAMINED BY ME, THE UNDERSIGNED PROFESSIONAL ENGINEER. I HAVE DETERMINED THAT THESE PLANS COMPLY WITH ALL APPLICABLE CODES AND HAVE BEEN PROPERLY ADAPTED TO USE ON THIS PROJECT.

STATE OF LOUISIANA
GERALD G. MENARD
License No. 20437
PROFESSIONAL ENGINEER
IN
CIVIL ENGINEERING
9/10/2020

STATE OF LOUISIANA
PAUL B. FOSSIER, JR
License No. 21026
PROFESSIONAL ENGINEER
IN
CIVIL ENGINEERING
5-31-17

SHEET NUMBER 657

PARISH	CONTROL SECTION	STATE PROJECT

DESIGNED P. FOSSIER	DETAILED J. KOEMPEL	SERIES NUMBER MARCH 2015
CHECKED K. BRAUNER	CHECKED P. FOSSIER	8 OF 10

DATE	REVISION DESCRIPTION	BY

APPROVED BY CHIEF ENGINEER: Jamie P. Williams DATE: 6-13-2017

STATE OF LOUISIANA DEPARTMENT OF TRANSPORTATION AND DEVELOPMENT DOTD

BRIDGE AND STRUCTURAL DESIGN

HIGHWAY GUARD RAILS
RAIL STRUCTURAL DETAILS

GR-200

IP_PWP:d0684422\BD.1.1.1.0.08_GR-200.dgn 5/30/2017 14:13

5/30/2017 14:14

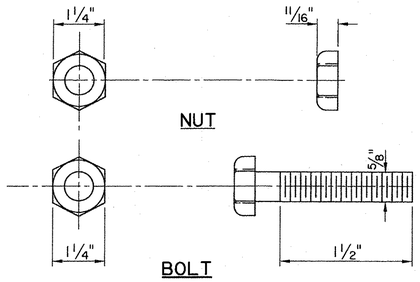

5/8" ø HEX BOLT & HEX NUT

(FOR FASTENING THE ANCHOR PLATE TO RAIL OR POST)
N.T.S.

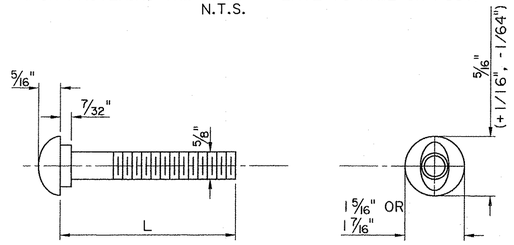

5/8" BUTTON HEAD BOLT
N.T.S.

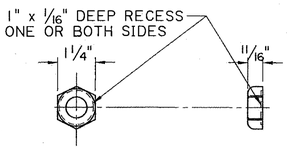

5/8"ø RECESS NUT
N.T.S.

5/8" BUTTON HEAD NUT	
L	THREAD LENGTH
1¼"	1 3/16"
2"	1¾"
10"	4"
1'-6"	4"
1'-8"	4"

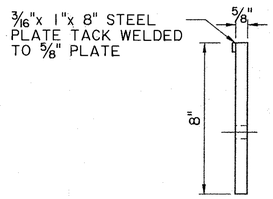

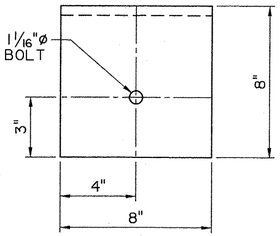

GALVANIZED STEEL BEARING PLATE
(FOR TRAILING END)
N.T.S.

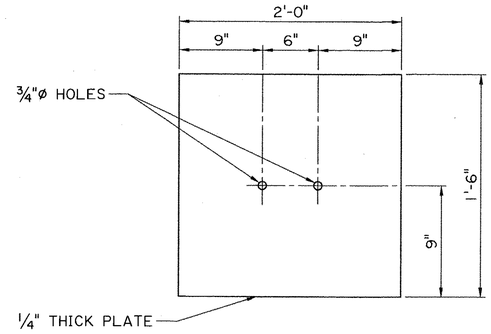

GALVANIZED SOIL PLATE
(FOR TRAILING END)
N.T.S.

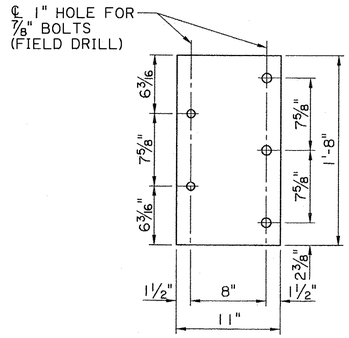

5/8" BEARING PLATE
(FOR ANCHORING THRIE BEAM
TO CONCRETE BARRIER RAIL)
N.T.S.

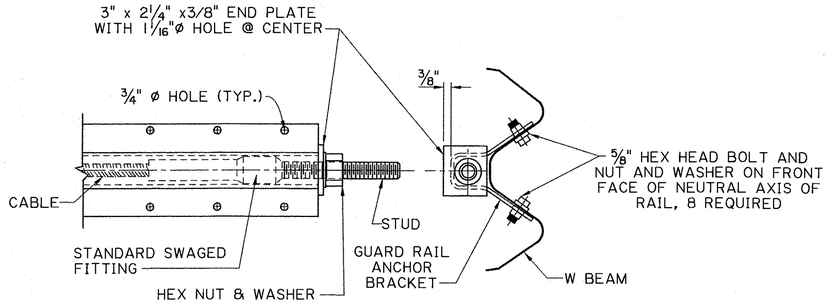

ELEVATION

SECTION

ELEVATION-BRACKET & FITTING
N.T.S.

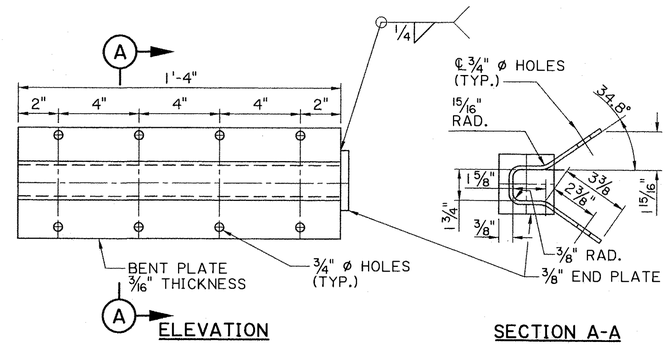

ELEVATION

SECTION A-A

GUARD RAIL ANCHOR PLATE
N.T.S.

GUARD RAIL SPLICE, POST BOLT AND RECESS NUT

NOTES:
5/8" DIA. BUTTON HEAD BOLTS:

(1¼" LENGTH): THIS BOLT IS USED TO SPLICE RAIL ELEMENTS USED IN THE STANDARD CORRUGATED SHEET STEEL BEAM GUARD RAIL.
(2" LENGTH): THIS BOLT IS FOR FASTENING RAILS TO STEEL POSTS WHEN USED IN THE STANDARD CORRUGATED SHEET BEAM GUARD RAIL.
(10" LENGTH): THIS BOLT IS USED FOR FASTENING RAILS TO WOOD POST IN THE STANDARD CORRUGATED SHEET STEEL BEAM GUARD RAIL.
(1'-6" LENGTH): THIS BOLT IS FOR FASTENING WOOD BLOCKS & POSTS IN THE STANDARD CORRUGATED SHEET STEEL BEAM.
(1'-8" LENGTH): THIS BOLT IS FOR FASTENING NESTED THRIE BEAM TO WOOD BLOCKS AND POST AT THE FIRST TWO POST LOCATIONS AT THE ENDS OF RIDGID (CONCRETE) STRUCTURE, UNLESS OTHERWISE SHOWN IN THE PLANS.

5/8" ø BOLTS SHALL CONFORM TO THE REQUIREMENTS OF ASTM A 307 AND NUTS TO THE REQUIREMENTS IN ACCORDANCE WITH ASTM A 563 GRADE A OR BETTER. BOLTS AND NUTS SHALL BE GALVANIZED IN ACCORDANCE WITH ASTM A 153.

STEEL POST & PLATES:

ALL STEEL POSTS AND PLATES SHALL CONFORM TO ASTM A 36 AND SHALL BE GALVANIZED IN ACCORDANCE WITH ASTM 123, NO PUNCHING, DRILLING OR CUTTING WILL BE PERFORMED AFTER GALVANIZING.

ANCHOR PLATE ASSEMBLY DETAILS
(FOR TRAILING END

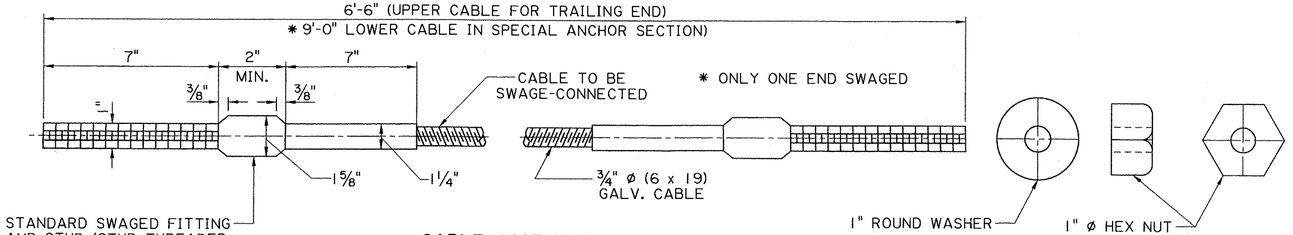

CABLE ASSEMBLY
(FOR TRAILING END)
N.T.S.

THESE STANDARD PLANS HAVE BEEN PROPERLY EXAMINED BY ME, THE UNDERSIGNED PROFESSIONAL ENGINEER. I HAVE DETERMINED THAT THESE PLANS COMPLY WITH ALL APPLICABLE CODES AND HAVE BEEN PROPERLY ADAPTED TO USE ON THIS PROJECT.

STATE OF LOUISIANA
GERALD G. MENARD
License No. 20457
PROFESSIONAL ENGINEER
IN
CIVIL ENGINEERING
9/10/2020

STATE OF LOUISIANA
PAUL B. FOSSIER, JR
License No. 21028
PROFESSIONAL ENGINEER
IN
CIVIL ENGINEERING
5-31-17

SHEET NUMBER	658

PARISH	CONTROL SECTION	STATE PROJECT

DESIGNED	P. FOSSIER
CHECKED	K. BRAUNER
DETAILED	J. KOEMPEL
CHECKED	P. FOSTER
SERIES NUMBER	MARCH 2015
	9 OF 10

NO.	DATE	REVISION DESCRIPTION	BY
	3-2-15	REVISED NOTES	P.F.

APPROVED BY CHIEF ENGINEER: Jamar P Williams
DATE: 6/13/2017

HIGHWAY GUARD RAILS
STRUCTURAL DETAILS

GR-200

BRIDGE AND STRUCTURAL DESIGN

IP_PWP:d0684422\BD.1.1.1.0.09_GR-200.dgn

14:15
5/30/2017

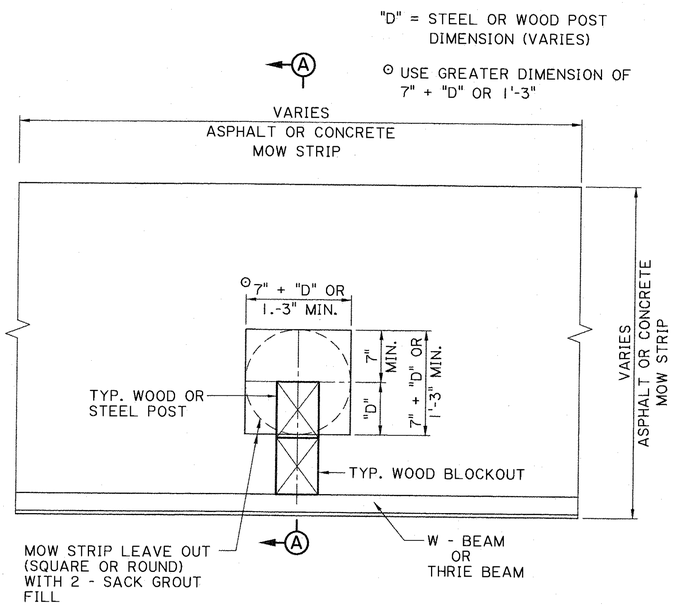

PLAN

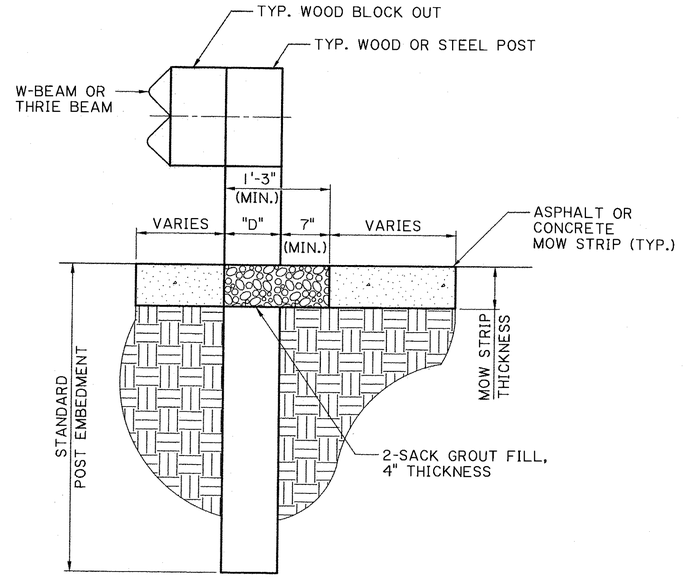

SECTION A-A

W-BEAM AND THRIE-BEAM GUARD RAIL INSTALLATIONS FOR CONCRETE OR ASPHALT PAVEMENT MOWING STRIPS

(FOR WOOD OR STEEL POSTS)

MOW STRIP NOTES:

1) ALL GUARDRAIL POSTS LOCATED WITHIN CONCRETE OR ASPHALT MOW STRIPS SHALL MEET INSTALLATION REQUIREMENTS SHOWN ON THIS SHEET.
2) USE A 2-SACK NON-SHRINK GROUT FILL WITH A MAXIMUM COMPRESSIVE STRENGTH OF 120 PSI
3) ALL LABOR AND MATERIALS TO PLACE 2-SACK GROUT FILL (4" THICKNESS) SHALL BE INCLUDED IN PAYMENT FOR CONCRETE OR ASPHALT PAVING PAY ITEMS.

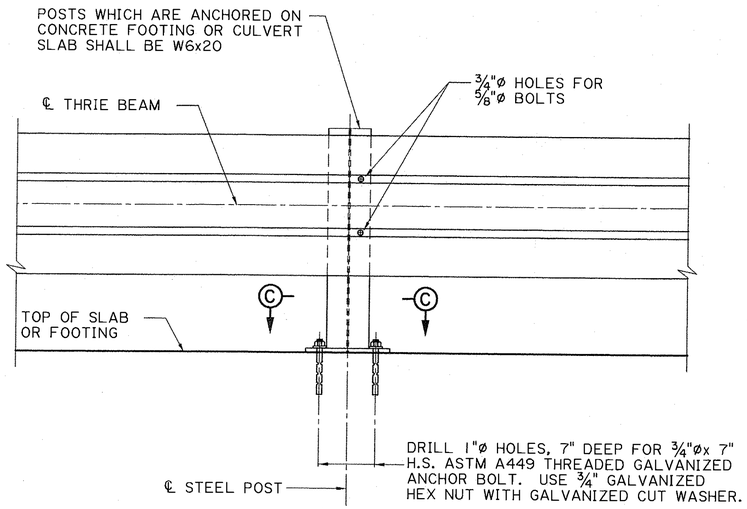

STEEL POST ATTACHED TO CONCRETE

SPECIAL POST WITH BASE PLATE TO BE USED WHEN REQUIRED EMBEDMENT OF CONVENTIONAL POST IN SOIL CANNOT BE OBTAINED.

W6 X 20 STEEL POST TO USE 8" X 8" WOOD BLOCK AS SHOWN ON SHT. 7 OF 10 ON DETAIL FOR STEEL POST AND ROUTED WOOD BLOCK FOR THRIE BEAM TRANSITION TO BRIDGE RAIL DETAIL.

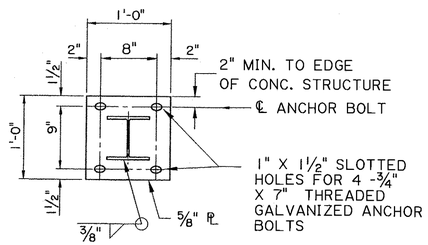

SECTION C-C - GALVANIZED STEEL BASE PLATE

ANCHOR BOLT INSTALLATION

ALL HOLES (VERTICAL OR HORIZONTAL) DRILLED INTO AN EXISTING CONCRETE STRUCTURE SHALL BE CLEANED WITH COMPRESSED AIR AND MAKE THEM FREE OF ANY OIL OR RESIDUE. HOLES SHALL BE FILLED WITH EPOXY INJECTION SYSTEM AS LISTED ON THE AML. PLACE ANCHOR BOLT IN HOLE IMMEDIATELY AND WAIT FOR THE MANUFACTURERS CURE TIME.

THESE STANDARD PLANS HAVE BEEN PROPERLY EXAMINED BY ME, THE UNDERSIGNED PROFESSIONAL ENGINEER. I HAVE DETERMINED THAT THESE PLANS COMPLY WITH ALL APPLICABLE CODES AND HAVE BEEN PROPERLY ADAPTED TO USE ON THIS PROJECT.

STATE OF LOUISIANA
GERALD G. MENARD
License No. 20437
PROFESSIONAL ENGINEER
IN
CIVIL ENGINEERING
9/10/2020

STATE OF LOUISIANA
PAUL B. FOSSIER, JR
License No. 21028
PROFESSIONAL ENGINEER
IN
CIVIL ENGINEERING
5-31-17

SHEET NUMBER 659

PARISH	CONTROL SECTION	STATE PROJECT

DESIGNED	P. FOSSIER
CHECKED	K. BRAUNER
DETAILED	C. OWENS
CHECKED	P. FOSSIER
SERIES NUMBER	MARCH 2015 10 OF 10

DATE	BY	REVISION DESCRIPTION
2-14-17	K.M.B.	UPDATED FOR 2016 SPECIFICATIONS

APPROVED BY: CHIEF ENGINEER: Jane P. Williams DATE: 6-13-2017

HIGHWAY GUARD RAILS
MISCELLANEOUS DETAILS
GR-200

BRIDGE AND STRUCTURAL DESIGN

IP_PWP:d0684422\BD.1.1.1.0.10_GR-200.dgn

7/20/2016 09:45

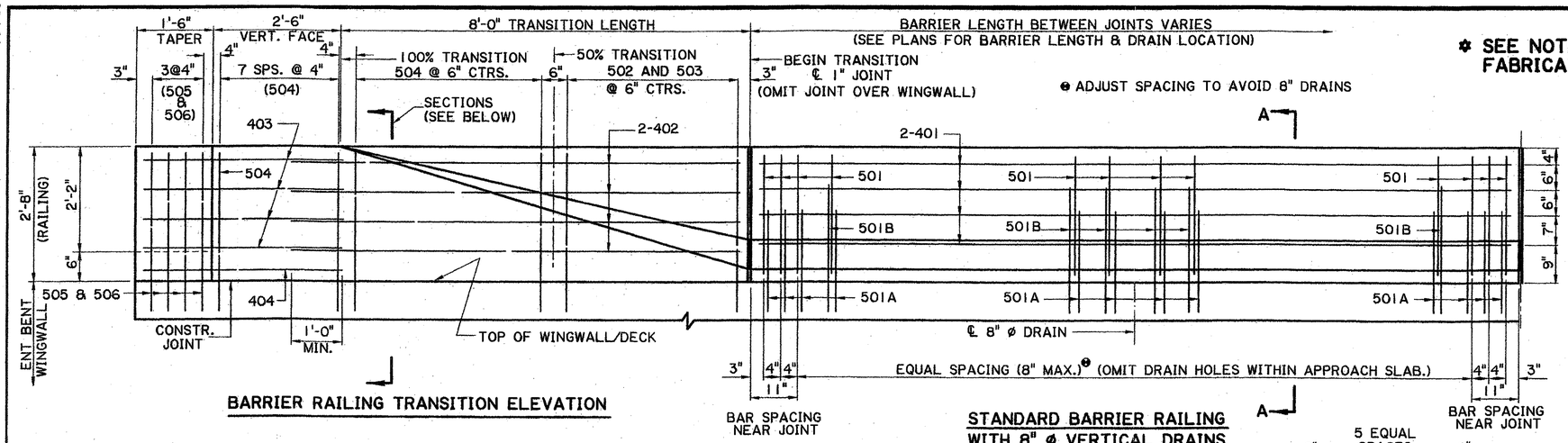

BARRIER RAILING TRANSITION ELEVATION

STANDARD BARRIER RAILING WITH 8" ø VERTICAL DRAINS

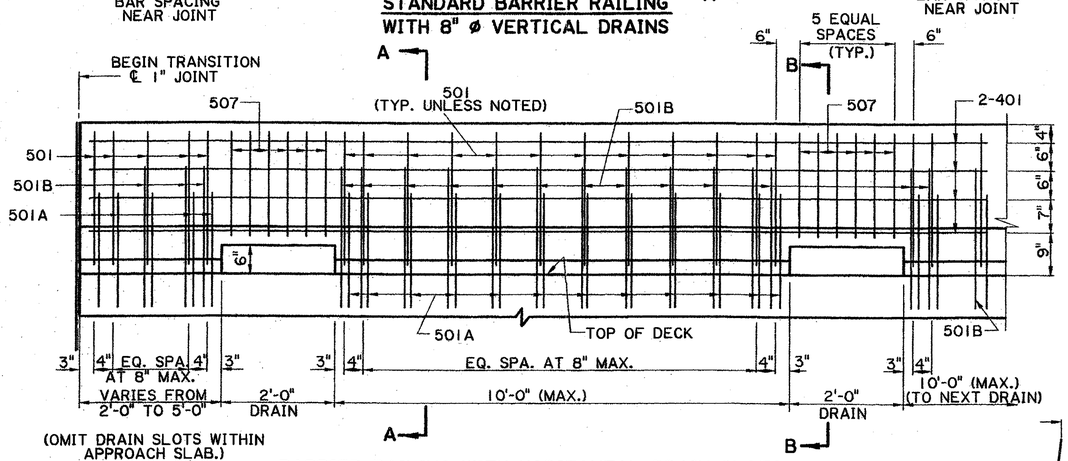

BARRIER RAILING WITH HORIZONTAL DRAIN SLOTS

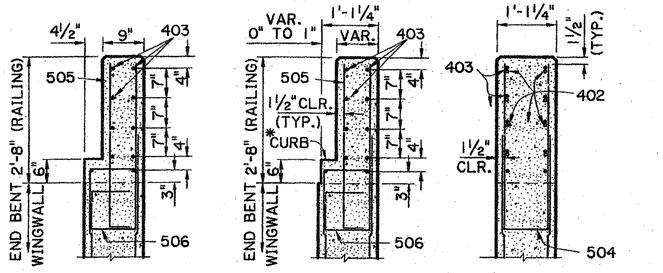

BLOCK OUT | TAPER | 100% TRANSITION

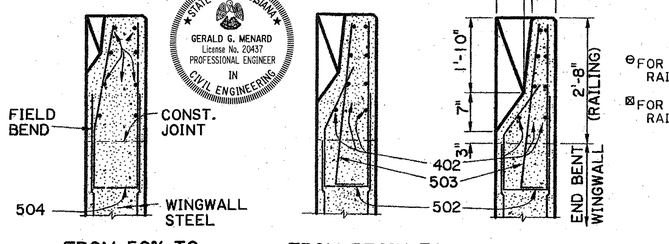

FROM 50% TO 100% TRANSITION | FROM BEGIN TO 50% TRANSITION | BEGIN TRANSITION

THESE STANDARD PLANS HAVE BEEN PROPERLY EXAMINED BY ME, THE UNDERSIGNED PROFESSIONAL ENGINEER, I HAVE DETERMINED THAT THESE PLANS COMPLY WITH ALL APPLICABLE CODES AND HAVE BEEN PROPERLY ADAPTED TO USE ON THIS PROJECT.

STATE OF LOUISIANA — GERALD G. MENARD — License No. 20437 — PROFESSIONAL ENGINEER IN CIVIL ENGINEERING

⊖ FOR 27" GUARD RAIL HEIGHT
⊠ FOR 28" GUARD RAIL HEIGHT

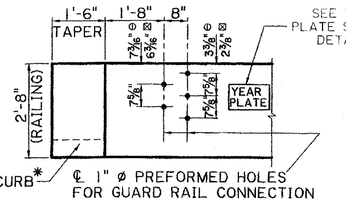

GUARD RAIL CONNECTION DETAIL
(SEE GUARD RAIL STANDARD PLANS FOR MORE INFORMATION)

STATE OF LOUISIANA — JUSTIN C. PELTIER — License No. 34765 — PROFESSIONAL ENGINEER IN CIVIL ENGINEERING — 5/18/2016

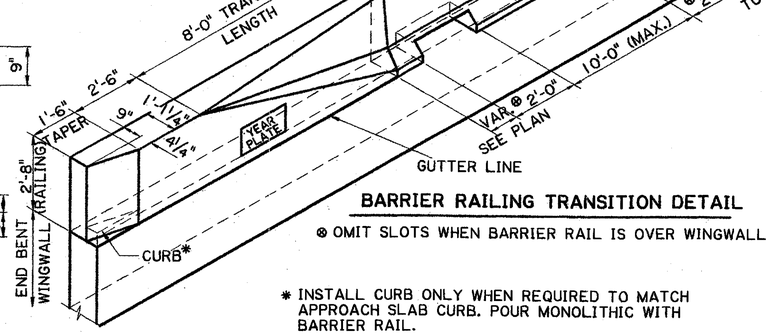

BARRIER RAILING TRANSITION DETAIL

⊗ OMIT SLOTS WHEN BARRIER RAIL IS OVER WINGWALL

* INSTALL CURB ONLY WHEN REQUIRED TO MATCH APPROACH SLAB CURB. POUR MONOLITHIC WITH BARRIER RAIL.

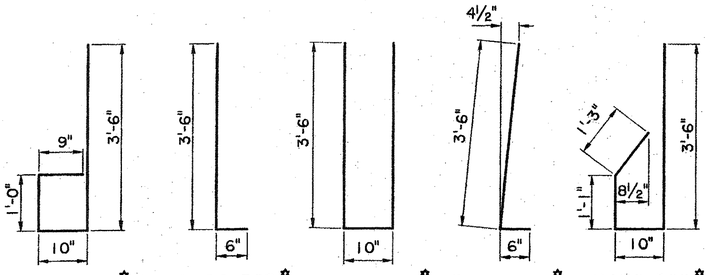

BARS 506 * (2½" ø PIN) | BARS 505 * (2½" ø PIN) | BARS 504 * (2½" ø PIN) | BARS 503 * (2½" ø PIN) | BARS 502 * (2½" ø PIN)

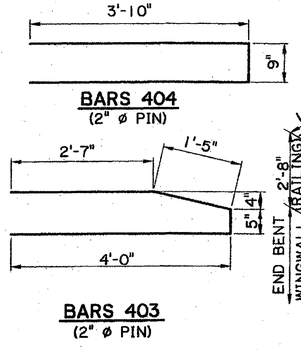

BARS 404 (2" ø PIN) | BARS 403 (2" ø PIN)

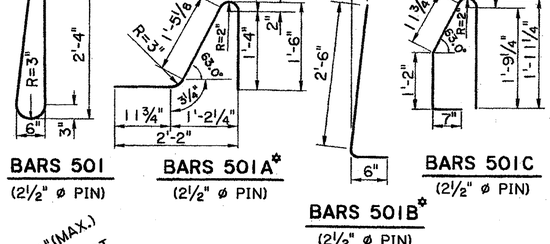

BARS 501 (2½" ø PIN) | BARS 501A * (2½" ø PIN) | BARS 501B * (2½" ø PIN) | BARS 501C (2½" ø PIN)

NOTES:

1) CONCRETE TO BE CLASS A ! AND REINFORCING STEEL TO BE GRADE 60.
2) REINFORCING STEEL DIMENSIONS SHOWN ARE BASED ON AN 8" THICK SLAB UNDER BARRIER. ADJUSTMENTS MUST BE MADE FOR DECKS WITH OTHER THICKNESSES. SEE SPAN DETAILS.
3) WHEN EPOXY COATED OR GALVANIZED REINFORCING STEEL IS REQUIRED IN THE CONCRETE DECK, LONGITUDINAL BARS AND STIRRUPS IN THE BARRIER RAIL FACE (ROADWAY SIDE) SHALL HAVE THE SAME PROTECTION. ALL BARRIER RAIL SURFACES ARE TO RECEIVE A CLASS 3 SPECIAL SURFACE FINISH.
4) 1" OPEN JOINT TYPICAL. SAW CUTTING OF THE OPEN JOINT IS PERMITTED PROVIDED 1½" MIN. CLEARANCE IS MAINTAINED FOR REINFORCING STEEL AND SUBJECT TO APPROVAL OF THE ENGINEER.
5) ALL CONCRETE AND STEEL IN BARRIER RAILING AND BARRIER RAILING TRANSITION INCLUDING BARS THAT PROJECT FROM THE DECK INTO THE RAILING TO BE PAID FOR UNDER ITEM 810-01-00100 CONCRETE BRIDGE RAILING (STANDARD) OR 810-01-00200 CONCRETE BRIDGE RAILING (SLOTTED), PER LINEAR FOOT.
6) SEE BRIDGE GENERAL PLAN FOR BARRIER TYPE.
7) WHEN OVER WINGWALL, USE BARS 501C IN LIEU OF 501A.

* SEE NOTE 2 PRIOR TO FABRICATING STEEL.

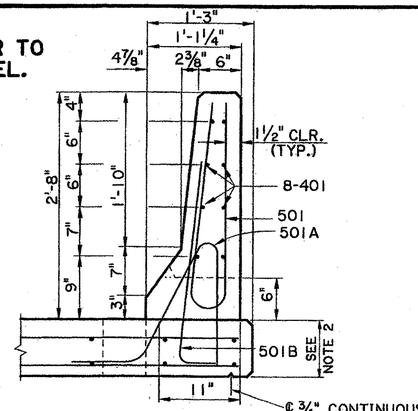

F-SHAPE BARRIER RAILING SECTION A-A

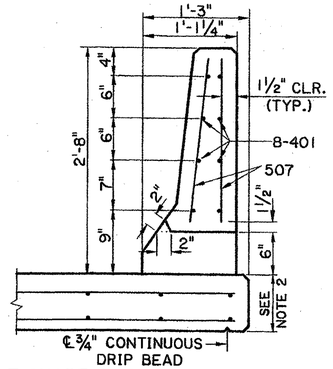

F-SHAPE BARRIER RAILING SECTION B-B

SHEET NUMBER	660
PARISH	
CONTROL SECTION	
STATE PROJECT	
DESIGNED T. LEE	
CHECKED J. PELTIER	
DETAILED G. GRASS	
CHECKED J. PELTIER	
SERIES NUMBER	1 OF 1

NO.	DATE	REVISION OR CHANGE ORDER DESCRIPTION	BY
	07/18/16	2016 SPECIFICATIONS UPDATE.	CMG
	07/23/15	REVISED GUARD RAIL CONNECTION DETAIL	CMG

CAST-IN-PLACE BARRIER RAILING & TRANSITION (TRANSITION ON WINGWALL)

BD.2.6.1.14.01 - (BR-01)

BRIDGE & STRUCTURAL DESIGN

IP_PWP:d0684424\BD.2.6.1.14.01 - BR-01.dgn

11/19/2012 16:19

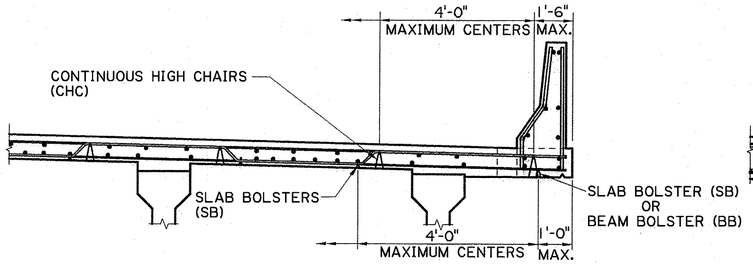

STEEL OR CONCRETE GIRDER SPAN - LAYOUT "A"

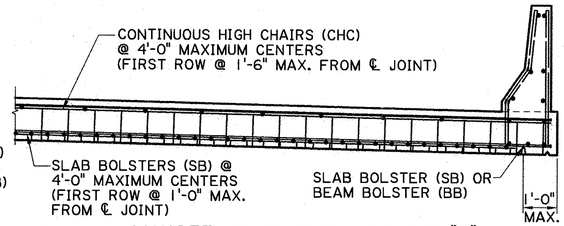

CONCRETE SLAB SPAN - LAYOUT "A"

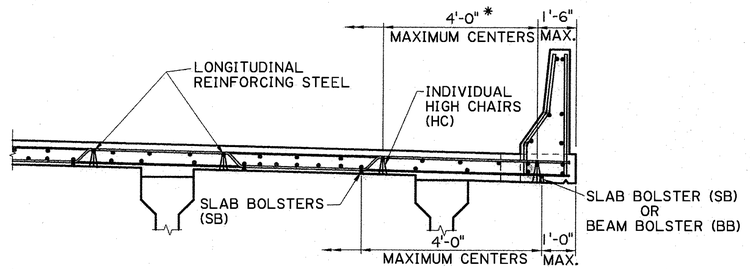

STEEL OR CONCRETE GIRDER SPAN - LAYOUT "B"
(ALTERNATE)

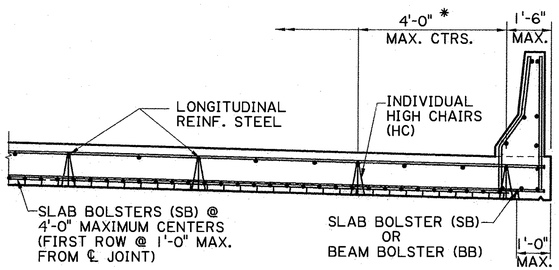

CONCRETE SLAB SPAN - LAYOUT "B"
(ALTERNATE)

GENERAL NOTES:

STEEL WIRE BAR SUPPORTS AND REINFORCING STEEL BARS SHALL BE IN ACCORDANCE WITH THE LATEST APPROVED LOUISIANA STANDARD SPECIFICATIONS FOR ROADS AND BRIDGES, AS AMENDED BY THE SPECIAL PROVISIONS AND/OR SUPPLEMENTAL SPECIFICATIONS.

HEIGHT OF BAR SUPPORTS ARE TO BE THAT REQUIRED TO SUPPORT THE REINFORCING BARS AT POSITIONS SHOWN IN THE PLANS.
BAR SUPPORTS ARE NOT INTENDED, AND SHALL NOT BE USED, TO SUPPORT RUNWAYS FOR CONCRETE BUGGIES OR SIMILAR LOADS.

WHEN BAR SUPPORTS ARE PLACED IN CONTINUOUS LINES, THEY SHALL BE SO PLACED THAT THE ENDS OF THE SUPPORTING WIRES SHALL BE LAPPED TO LOCK THE LAST LEGS ON ADJOINING PIECES, BUT NO BAR SHALL BE PLACED MORE THAN 2" BEYOND THE LAST LEG AT THE END OF A RUN OF ANY CONTINUOUS SUPPORTS.

WHERE BAR SUPPORTS ARE USED ON EARTH OR AGGREGATE SUB GRADES, SUITABLE PLATES SHALL BE PROVIDED TO PREVENT DISPLACEMENT OF THE SUPPORT FOOT. ALL BAR SUPPORTS BEARING ON THE FORMS SHALL HAVE RADIUS BEARING LEGS IN THE FORM OF A HOOK (UPTURNED LEGS) OR SPHERICAL FOOT AT THE LOWER END OF THE LEGS.

THE BOTTOM OF BAR SUPPORTS SHALL BE COATED WITH AN ACCEPTABLE EPOXY OR PLASTIC MATERIAL FOR A MINIMUM DISTANCE OF 2 INCHES FROM THE POINT OF CONTACT WITH THE FORMS.

METAL TIE WIRES AND BAR SUPPORTS SHALL BE COATED FULLY WITH AN ACCEPTABLE EPOXY, PLASTIC OR NYLON MATERIAL IF USING EPOXY COATED REINFORCING STEEL.

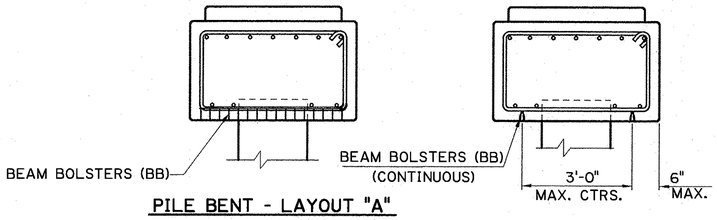

PILE BENT - LAYOUT "A"

PILE BENT - LAYOUT "B"
(ALTERNATE)

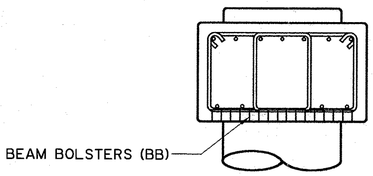

COLUMN BENT

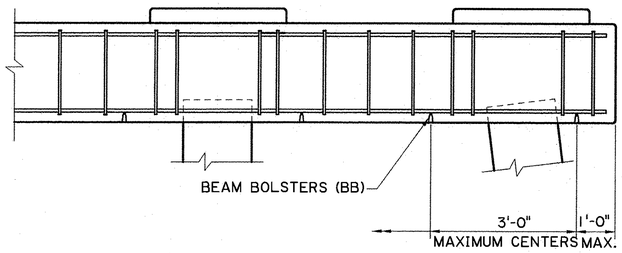

PILE BENT - LAYOUT "A"

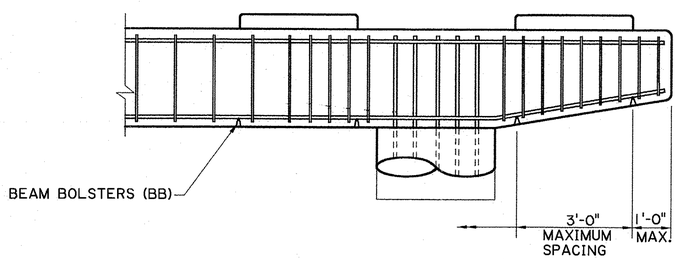

COLUMN BENT

TYPE OF SUPPORT	BAR SUPPORT ILLUSTRATION	MINIMUM WIRE DIAMETER △			REMARKS
		HEIGHT	TOP	LEGS	
SLAB BOLSTER (SB)	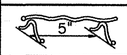	ALL	NO. 4 CORRU-GATED	NO. 6	VERTICAL CORRUGATIONS SPACED 1" ON CENTERS
BEAM BOLSTER (BB)	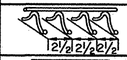	UP TO 2" OVER 2"	NO. 7 NO. 4	NO. 7 NO. 4	
⊡ CONTINUOUS HIGH CHAIR (CHC)	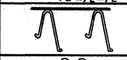	2" TO 5" 5" TO 9" OVER 9"	NO. 2 NO. 2 NO. 2	NO. 4 NO. 2 NO. 0	LAYOUT "A" FOR SPANS
❶ INDIVIDUAL HIGH CHAIR (HC)	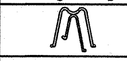	2" TO 5" 5" TO 9" OVER 9"	N/A N/A N/A	NO. 4 NO. 2 NO. 0	LAYOUT "B" FOR SPANS (ALTERNATE)

△ AMERICAN STEEL AND WIRE GAUGES.

❶ LEGS SHALL BE 20 DEGREES OR LESS WITH VERTICAL WHEN HEIGHT EXCEEDS 1'-0". REINFORCE LEGS WITH WELDED CROSS WIRES OR ENCIRCLING WIRES.

⊡ LEGS SHALL BE 20 DEGREES OR LESS WITH VERTICAL, ON 8¼" CENTER MAXIMUM, WITHIN 4" OF END CHAIR, AND SPREAD BETWEEN LEGS NOT LESS THAN 50% OF NORMAL HEIGHT.

* IF LONGITUDINAL REINFORCING BARS ARE NO. 4, SPACE THE INDIVIDUAL HIGH CHAIRS (HC) @ 3'-0" MAXIMUM CENTERS LONGITUDINALLY; FOR NO. 5 BARS OR LARGER, SPACE @ 4'-0" MAXIMUM CENTERS.

STATE OF LOUISIANA
GERALD G. MENARD
License No. 20437
PROFESSIONAL ENGINEER
IN
CIVIL ENGINEERING

THESE STANDARD PLANS HAVE BEEN PROPERLY EXAMINED BY ME, THE UNDERSIGNED PROFESSIONAL ENGINEER. I HAVE DETERMINED THAT THESE PLANS COMPLY WITH ALL APPLICABLE CODES AND HAVE BEEN PROPERLY ADAPTED TO USE ON THIS PROJECT.

STATE OF LOUISIANA
PAUL B. FOSSIER, JR
License No. 21028
PROFESSIONAL ENGINEER
IN
CIVIL ENGINEERING
11-15-12

SHEET NUMBER 661

PARISH	CONTROL SECTION	STATE PROJECT

DESIGNED	G. GRASS	OCT. 2008
CHECKED		
DETAILED	F. FOSSIER	SERIES NUMBER
CHECKED		

REVISION DESCRIPTION	DATE	APPROVED BY CHIEF ENGINEER	BY
Add Note On Support & Tie Coatings	1/15/12		P.F.

DATE: 3-6-13

STEEL WIRE BAR SUPPORT
FOR REINFORCING STEEL

SWBS-100

IP_PWP:dms31588\swbs100e.dgn

09:45
9/10/2020
F:\00_PROJECTS\12-500\Sheet_Sets\Construction - Revised\P2 sheet_706.dgn

EXC: 11 CU. YDS.
EMB: 986 CU. YDS.

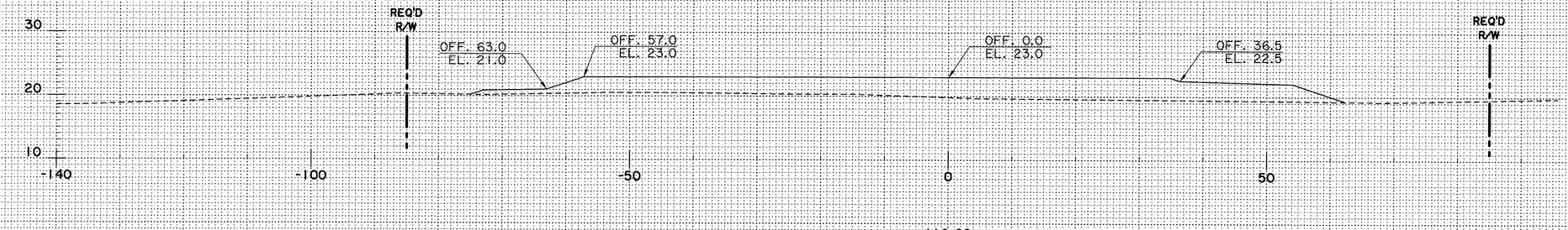

116+00

EXC: 0 CU. YDS.
EMB: 361 CU. YDS.

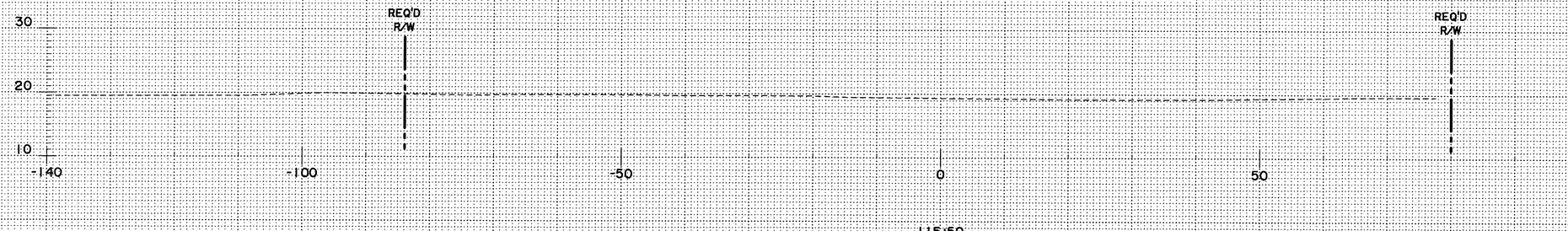

115+50

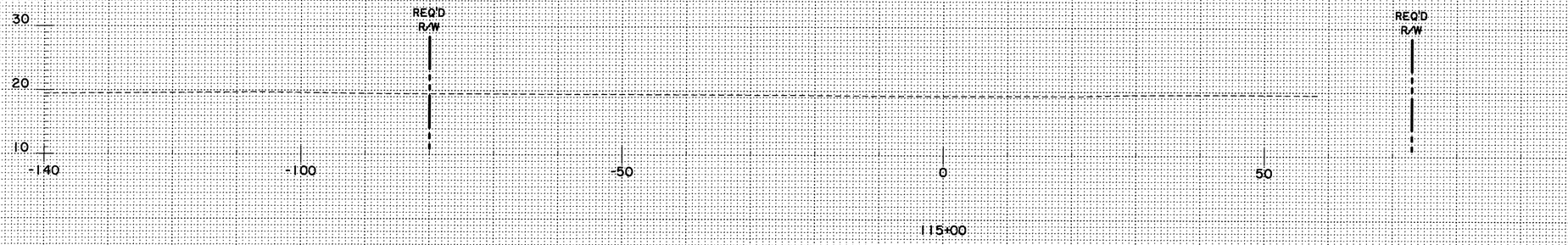

115+00

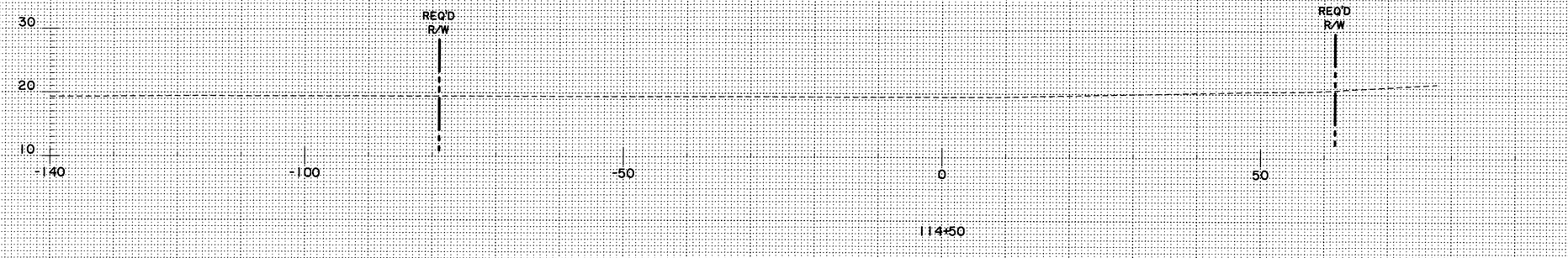

114+50

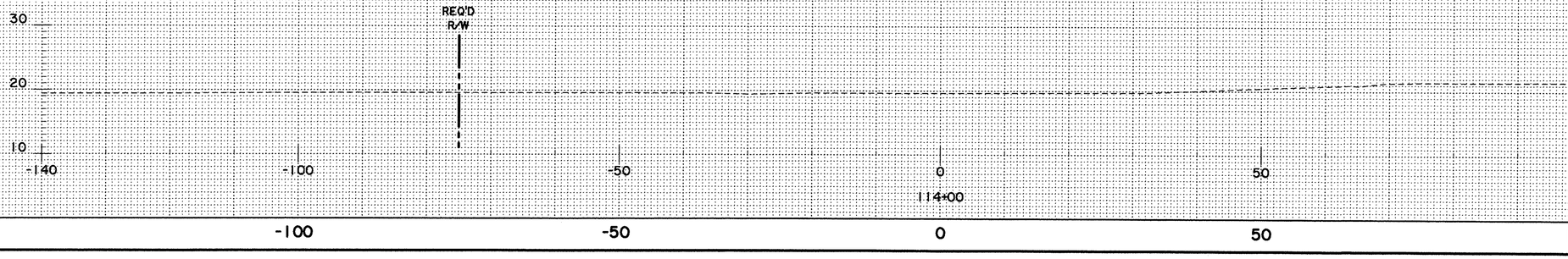

114+00

-100 -50 0 50 100

SHEET NUMBER	706

PARISH	CITY	PROJECT
EAST BATON ROUGE	BATON ROUGE	12-CS-HC-0043

DESIGNED	DETAILED	SERIES NUMBER
MLR	MLR	
CHECKED	CHECKED	
GGM	GGM	

NO.	DATE	REVISION OR CHANGE ORDER DESCRIPTION	BY

CROSS SECTIONS

MALL OF LA BLVD.

MALL OF LOUISIANA BOULEVARD

STATE OF LOUISIANA
GERALD G. MENARD
License No. 20437
PROFESSIONAL ENGINEER
IN
CIVIL ENGINEERING
9/10/2020

CITY OF BATON ROUGE ★ PARISH OF EAST BATON ROUGE

EVANS-GRAVES ENGINEERS

09:45

9/10/2020

F:\00_PROJECTS\12-500\Sheet_Sets\Construction - Revised\P2 sheet_707.dgn

EXC: 0 CU. YDS.
EMB: 0 CU. YDS.

REQ'D R/W

20
10
0
-140 -100 -50 0 50 100 140

118+50

EXC: 0 CU. YDS.
EMB: 0 CU. YDS.

REQ'D R/W

20
10
0
-140 -100 -50 0 50 100 140

118+00

SURCHARGE EMBANKMENT

EXC: 0 CU. YDS.
EMB: 81 CU. YDS.

REQ'D R/W

30
20
10
-140 -100 -50 0 50 100 140

117+50

SURCHARGE EMBANKMENT

OFF. 0.0
EL. 27.4

OFF. 31.5
EL. 26.1

OFF. 59.0
EL. 21.3

EXC: 19 CU. YDS.
EMB: 1,124 CU. YDS.

REQ'D R/W

30
20
10
-140 -100 -50 0 50 100 140

117+00

OFF. 47.5
EL. 27.3

OFF. 17.5
EL. 28.0

OFF. 0.0
EL. 26.3

OFF. 31.0
EL. 25.6

OFF. 41.0
EL. 23.7

EXC: 30 CU. YDS.
EMB: 1,375 CU. YDS.

REQ'D R/W

30
20
10
-140 -100 -50 0 50 100 140

116+50

-100 -50 0 50 100

SHEET NUMBER	707
PARISH	EAST BATON ROUGE
CITY	BATON ROUGE
PROJECT	12-CS-HC-0043
DESIGNED	MLR
CHECKED	GGM
DETAILED	MLR
CHECKED	GGM
SERIES NUMBER	

NO.	DATE	BY	REVISION OR CHANGE ORDER DESCRIPTION

CROSS SECTIONS

MALL OF LA BLVD.

MALL OF LOUISIANA BOULEVARD

STATE OF LOUISIANA
GERALD G. MENARD
License No.: 20657
PROFESSIONAL ENGINEER
IN
CIVIL ENGINEERING
9/10/2020

CITY OF BATON ROUGE ★ PARISH OF EAST BATON ROUGE

EVANS-GRAVES ENGINEERS

09:45
9/10/2020
F:\00_PROJECTS\12-500\Sheet_Sets\Construction - Revised\P2 sheet_708.dgn

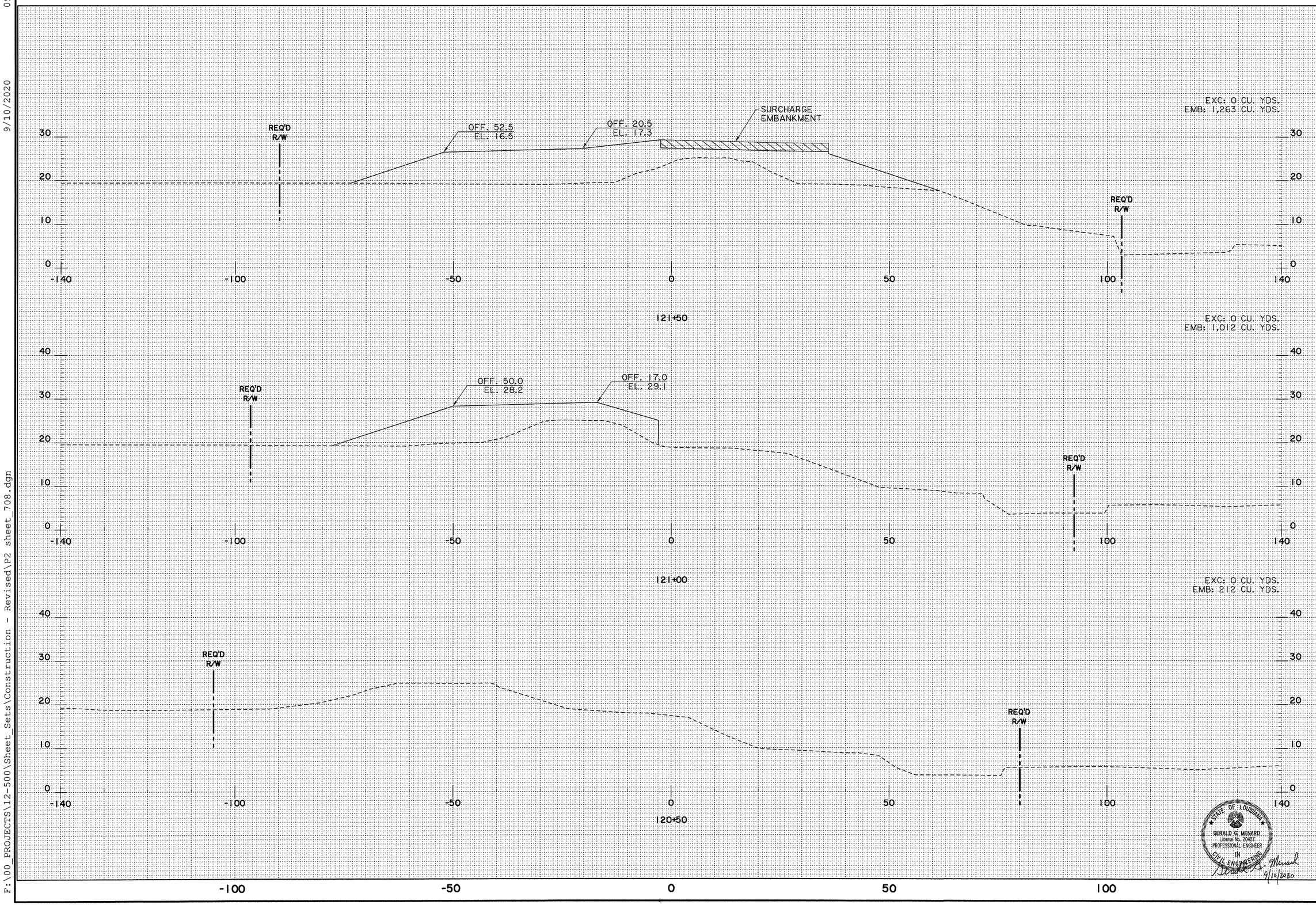

SHEET NUMBER 708

PARISH: EAST BATON ROUGE
CITY: BATON ROUGE
PROJECT: 12-CS-HC-0043

DESIGNED MLR
CHECKED GGM
DETAILED MLR
CHECKED GGM
SERIES NUMBER

NO.	DATE	REVISION OR CHANGE ORDER DESCRIPTION	BY

CROSS SECTIONS

MALL OF LA BLVD.

MALL OF LOUISIANA BOULEVARD

STATE OF LOUISIANA
GERALD G. MENARD
License No. 20437
PROFESSIONAL ENGINEER
IN
CIVIL ENGINEERING
9/15/2020

CITY OF BATON ROUGE PARISH OF EBR

EVANS-GRAVES ENGINEERS

9/10/2020 09:45
F:\00_PROJECTS\12-500\Sheet_Sets\Construction - Revised\P2 sheet_709.dgn

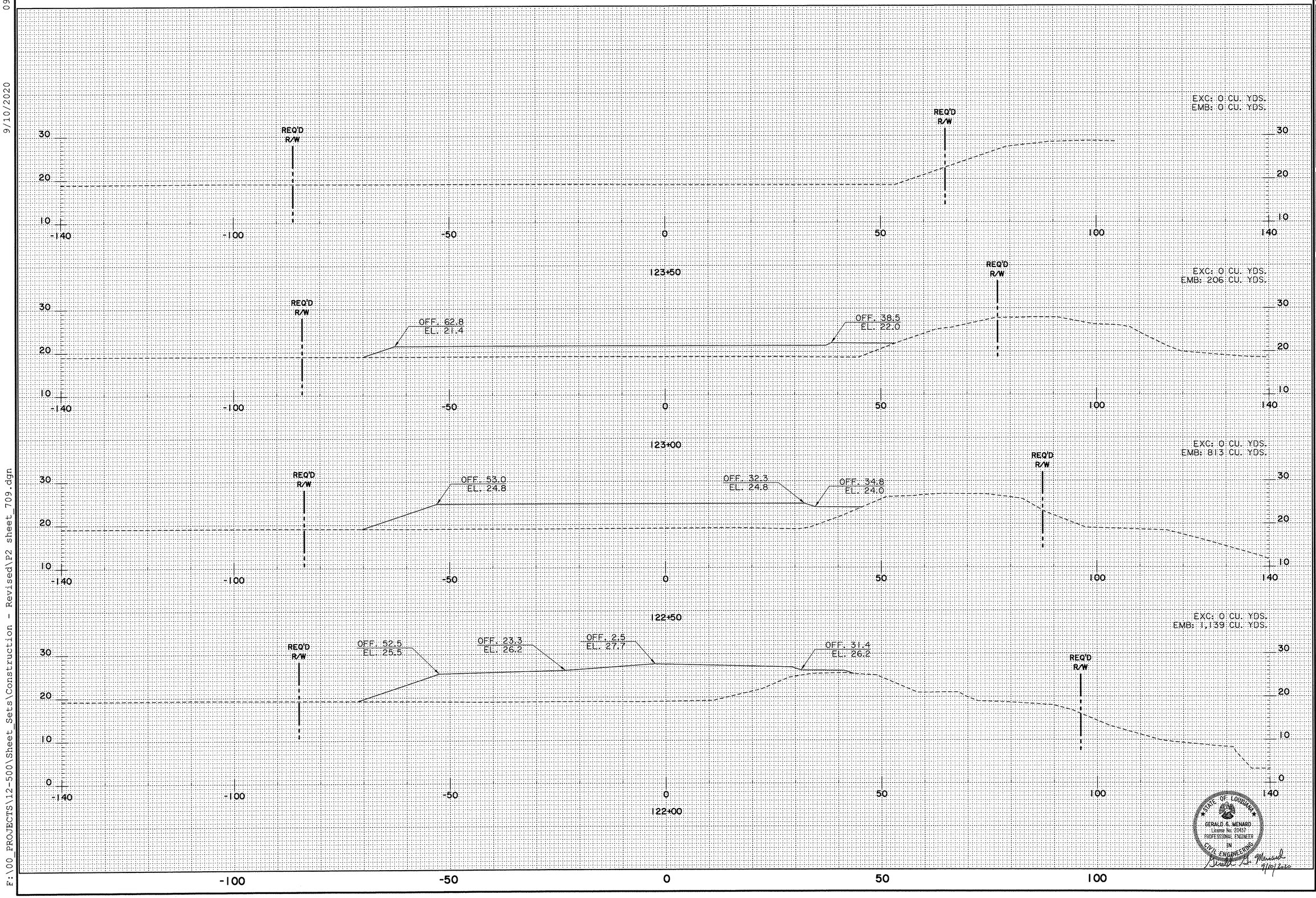

SHEET NUMBER 709

PARISH: EAST BATON ROUGE
CITY: BATON ROUGE
PROJECT: 12-CS-HC-0043

DESIGNED MLR
CHECKED GGM
DETAILED MLR
CHECKED GGM
SERIES NUMBER

NO.	DATE	REVISION OR CHANGE ORDER DESCRIPTION	BY

CROSS SECTIONS

MALL OF LA BLVD.

MALL OF LOUISIANA BOULEVARD

STATE OF LOUISIANA
GERALD G. MENARD
License No. 20457
PROFESSIONAL ENGINEER
IN
CIVIL ENGINEERING
9/10/2020

EVANS-GRAVES ENGINEERS